Service
Service
Service

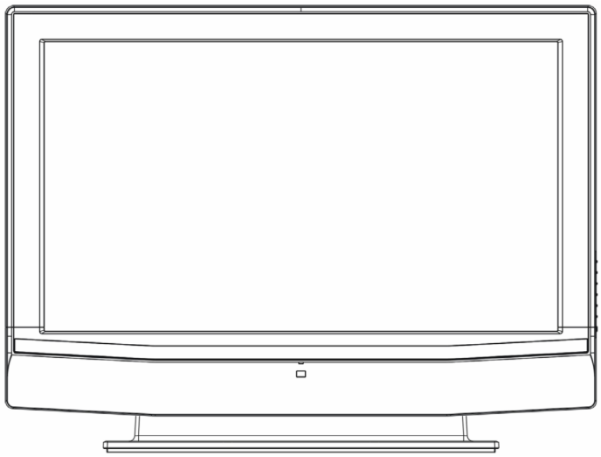

Service Manual

Horizontal Frequency
31KHz-60KHz

TABLE OF CONTENTS

Description	Page	Description	Page
Table Of Contents	1	6. White Balance Luminance Adjustment	26
Important Safety Notice	2	7. PCB Layout	27
Revision List	3	7.1 Main Board	27
1. Monitor Specification	4	7.2 Power Board	30
2. Operating Instructions	5	7.3 IR Board	33
2.1 The Use Of Remote Control	5	7.4 Key Board	34
2.2 Front Panel Control Knobs	6	8. Block Diagram	35
2.3 OSD Operations	7	9. Schematic Diagram	36
2.4 How To Connect	14	9.1 Main Board	36
3 Input/Output Specification	15	9.2 Power Board	52
3.1 Input Signal Connector	15	10.Exploded View	53
3.2 RGB Input Signal Timing	16	11.BOM List	55
4. Mechanical Instructions	17	12.Different Parts List	85
5. Repair Flow Chart	21		

Datasheet.Live

SAFETY NOTICE

ANY PERSON ATTEMPTING TO SERVICE THIS CHASSIS MUST FAMILIARIZE HIMSELF WITH THE CHASSIS AND BE AWARE OF THE NECESSARY SAFETY PRECAUTIONS TO BE USED WHEN SERVICING ELECTRONIC EQUIPMENT CONTAINING HIGH VOLTAGES.

CAUTION: USE A SEPARATE ISOLATION TRANSFOMER FOR THIS UNIT WHEN SERVICING

Important Safety Notice

Proper service and repair is important to the safe, reliable operation of all AOC Company Equipment. The service procedures recommended by AOC and described in this service manual are effective methods of performing service operations. Some of these service operations require the use of tools specially designed for the purpose. The special tools should be used when and as recommended.

It is important to note that this manual contains various CAUTIONS and NOTICES which should be carefully read in order to minimize the risk of personal injury to service personnel. The possibility exists that improper service methods may damage the equipment. It is also important to understand that these CAUTIONS and NOTICES ARE NOT EXHAUSTIVE. AOC could not possibly know, evaluate and advise the service trade of all conceivable ways in which service might be done or of the possible hazardous consequences of each way. Consequently, AOC has not undertaken any such broad evaluation. Accordingly, a servicer who uses a service procedure or tool which is not recommended by AOC must first satisfy himself thoroughly that neither his safety nor the safe operation of the equipment will be jeopardized by the service method selected.
Hereafter throughout this manual, AOC Company will be referred to as AOC.

WARNING

Use of substitute replacement parts, which do not have the same, specified safety characteristics might create shock, fire, or other hazards.

Under no circumstances should the original design be modified or altered without written permission from AOC. AOC assumes no liability, express or implied, arising out of any unauthorized modification of design.
Servicer assumes all liability.

FOR PRODUCTS CONTAINING LASER:
DANGER-Invisible laser radiations when open AVOID DIRECT EXPOSURE TO BEAM.
CAUTION-Use of controls or adjustments or performance of procedures other than those specified herein may result in hazardous radiation exposure.
CAUTION -The use of optical instruments with this product will increase eye hazard.

TO ENSURE THE CONTINUED RELIABILITY OF THIS PRODUCT, USE ONLY ORIGINAL MANUFACTURER'S REPLACEMENT PARTS, WHICH ARE LISTED WITH THEIR PART NUMBERS IN THE PARTS LIST SECTION OF THIS SERVICE MANUAL.
Take care during handling the LCD module with backlight unit
-Must mount the module using mounting holes arranged in four corners.
-Do not press on the panel, edge of the frame strongly or electric shock as this will result in damage to the screen.
-Do not scratch or press on the panel with any sharp objects, such as pencil or pen as this may result in damage to the panel.
-Protect the module from the ESD as it may damage the electronic circuit (C-MOS).
-Make certain that treatment person’s body is grounded through wristband.
-Do not leave the module in high temperature and in areas of high humidity for a long time.
-Avoid contact with water as it may a short circuit within the module.
-If the surface of panel becomes dirty, please wipe it off with a soft material. (Cleaning with a dirty or rough cloth may damage the panel.)

Revision List

Version	Release Date	Revision Instructions	TPV Model
A00	Nov-30-2007	Initial Release	E327AZNSBWH2NN
			E327AZNSBWH5NN

1. Monitor Specification

Item		Specification	
LCD Panel	Screen Size	32” TFT-LCD Panel	
	Aspect Ratio	16 : 9	
	Resolution	1366 x768 (XGA)	
	Display Area	697.685 (H) x 392.256(V)	
	Pixel Pitch	0.51075 mm (H) X 0.51075 mm	
	Display Colors	16.7 million	
	Lamp Type/Life	60000 hr	
	Color Temperature	Cool / Warm/Normal	
VGA Function	Input support definition	Could support to 1360*768 This product could only support to 60Hz, ‘Input out of range’ will displayed when the input vertical frequency out of 60Hz	
TV Function	TV Standard	ATSC	
	Sound System	MTS	
	Color systems	NTSC	
Video Input	AV	RCA x 1	Audio L/R x 1
	S-VIDEO	S-Videox 1	
	Component	YPbPr x 1	Audio L/R x 1
Audio output	Audio output: L / R	Speaker (built-in): Two 10 watt speakers	
		Headphone Mini-jack for stereo (3.5ø)	
Table Stand	Yes		
Wall Mount	VESA 100 x 100 mm		
Power	Power	AC100V-240V, 50/60Hz	
	Power Consumption	<180W	
Environment	Temperature	+ 0 °C ~ + 40 °C	
	storage	- 10 °C ~ + 50 °C	
	operating	10% ~ 85%	
Dimension	W x H x D (without stand)	805.90 x 604.95 x 238.29 (mm)	
Net weight	Without accessory	12 Kg	
Accessory	Remote controller, Batteriesx2, Power cord, Signal Cable, Audio Cable, User manual		

2. Operations Instructions

2.1 The Use of Remote Control

"POWER"
Press to power ON/OFF (standby) TV.
(Note:1.TV is never completely power off unless physically unplugged.
2.Press to turn on TV after the power on status LED had changed to the amber color and stopped flashing.)

"VIDEO"
Press repeatedly to choose S-Video/ Composite source mode (Video 1 ~ 2).

"COMP"
Press repeatedly to choose Component source mode (Video 3).

"PC"
Press repeatedly to choose VGA or HDMI source mode (Video 4 ~ 5).

"TV"
Press to choose ATSC/NTSC TV source mode.

"0 ~ 9 /- number"
Press to enter TV channel number to select channel (Press '-' to indicate choosing the sub-channel).

"SLEEP"
Press to set a time period (off/5/10/15/30/45/60/90/120/180/240min) after which the TV should switch itself to standby mode.

"FREEZE"
Press to freeze the displayed picture

"VOL- / VOL+"
Press + or - to adjust the volume.

"MENU"
Press to open or exit menu.

"∧","∨","<",">","OK"
Press to adjust the various function items on the menu.

"V-CHIP"
Press to lock / unlock Parental Control temporarily. (After setting the restricted table of MPAA or TV Rating.)

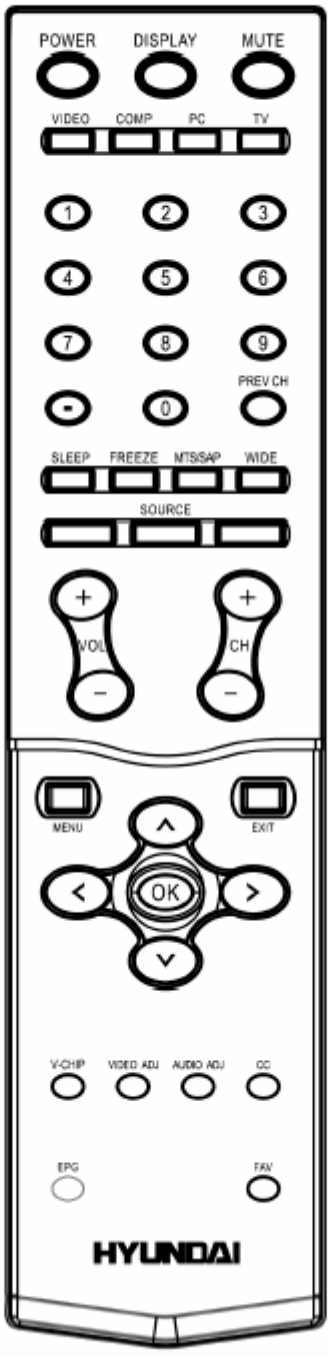

"DISPLAY"
Press to show the information about the input source、TV channel、display resolution and current time.

"MUTE"
Press to set TVsound mute ON/OFF.

"PREV CH"
Press to display the previous TV.

"MTS/SAP"
Press to activate the NTSC TV sounds, such as: Stereo, SAP or Mono tone.

"WIDE"
Press to choose the display aspect as: Normal, Wide, Zoom or Cinema mode.

"SOURCE"
Press repeatedly to choose the various input sources (Video 1 ~ 5).

"CH- / CH +"
Press + or - to browse through the TV channels.

"Exit"
Press to exit menu or OSD.

"VIDEO ADJ"
Press to choose the Brightness or Contrast adjustment.

"AUDIO ADJ"
Press to switch the ATSC multi-channel TV sounds.

"CC"
Press repeatedly to change cc on/cc off/cc on when mute.

"EPG"
EPG is not available.

"FAV"
Press to display the favorite TV channel. (After setting the favorite TV channel on main menu).

2.2 Front Panel Control Knobs

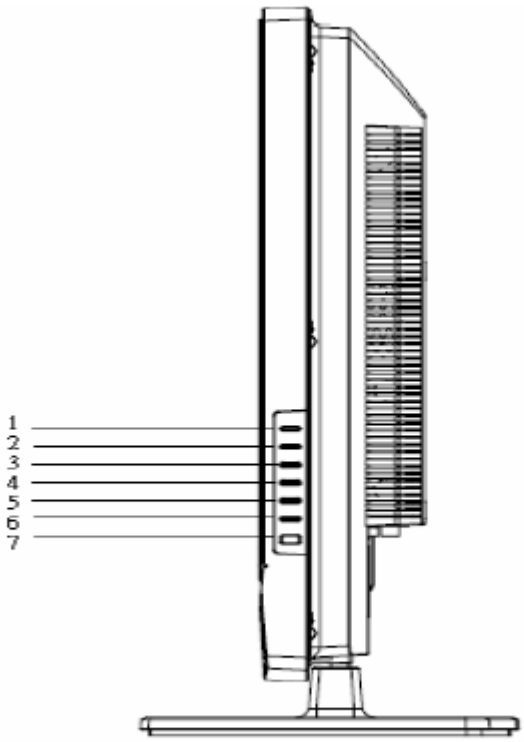

1 VOL▲	VOL▲: Press to increase the sound volume level.
2 VOL▼	VOL▼ : Press to decrease the sound volume level.
3 CH ▲	CH ▲: Press to select the next higher Program number.
4 CH ▼	CH ▼: Press to select the next lower Program number.
5 MENU	Menu key: Press to open or exit the OSD menu.
6 INPUT	Source key: Press to select the input source.
7 POWER	Power key: Press to turn on / off (standby) the TV set. (Please re-turn on TV after the Power-ON status LED had changed to the orange color and finished flashing.)

2.3 OSD Operations

1. Press the **MENU** button to display the main menu
2. Use the **cursor up/down** to select a menu item.
3. Use the **cursor left/right** to enter a submenu.
4. Press the **OK** button to enable/disable the function.
5. Press the **MENU** or **EXIT** button to exit the menu.

Press the MENU button to enter the main OSD (On Screen Display). Adjust the items including **Setup menu**, **Video menu**, **Audio menu** and **Feature menu**. However, some function items in the menus may only be enabled in the particular source modes.

SETUP MENU

The Setup menu in TV mode shows as below. In others source modes, the Setup menu only shows **Menu Language** and **Aspect Ratio** items.

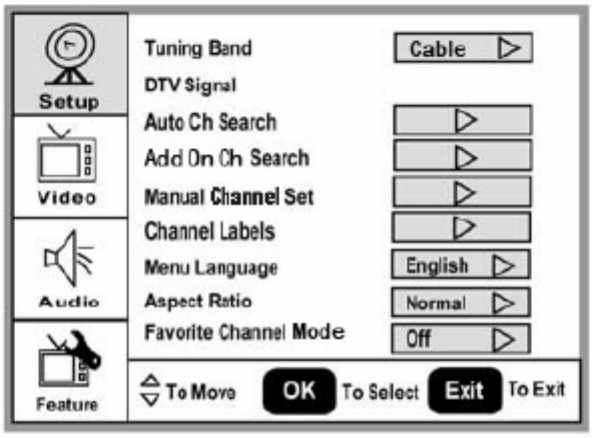

1. **Tuning Band**: Select TV source signal from the Air (antenna) or Cable (CATV).

2. **DTV Signal**: Show the intensity of the received DTV signal.

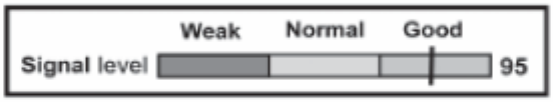

3. **Auto Ch Search**: Automatically scan all NTSC / ATSC TV channels and then store in the channel table. In channel scan process, the OSD can display the number of channels which had been found.

4. **Add on Ch search:**Add channels which are new found.

5. **Manual Channel Set**: Show the channel setup table. User can choose to display the ATSC or NTSC TV channels and then edit (add/delete) the channel numbers.

6. **Channel Labels**: Show the NTSC / ATSC TV channel label menu for user modifying channel labels specifically.

7. **Menu Language**: Select the menu display language. (English / Espanol / Francais)

8. **Aspect Ratio**: Select the display aspect ratio. (Normal/Zoom/Wide/Cinema)

9. **Favorite Channel Mode**: When favorite channel mode on user can edit favorite channel table in favorite channel set option.

VIDEO MENU

The Video menu in most source modes shows as below. It provides several video adjustment items for user fine tuning the video display. Only in VGA source modes, the Video menu simply provides **Contrast**, **Brightness**, **Back light** and **Settings (Preset)** items.

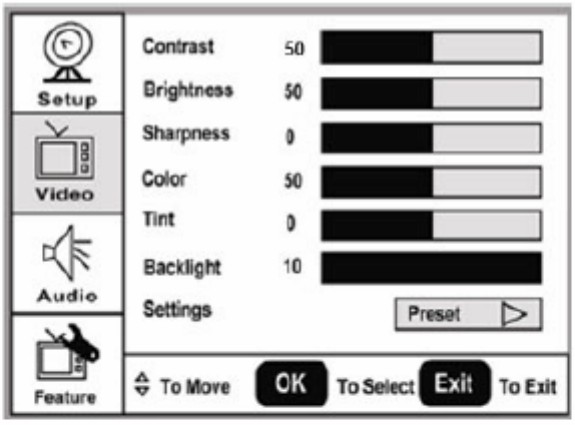

1. **Contrast**: Video contrast adjustment, the tuning range is 0 ~ 100.
2. **Brightness**: Video brightness adjustment, the tuning range is 0 ~ 100.
3. **Sharpness**: Video sharpness adjustment, the tuning range is -50 ~ 50.
4. **Color**: Video color chroma adjustment, the tuning range is 0 ~ 100.
5. **Tint**: Video tint adjustment, the tuning range is R50 ~ G50.
6. **BackLight**: Backlight strength adjustment, the tuning range is 0 ~ 10.
7. **Settings**: Restore the default video settings.

The Audio menu in TV mode shows as below. It provides audio adjustment for user to modify the audio setting. Audio language setting is only available with ATSC TV source, the option is disable under other source modes.

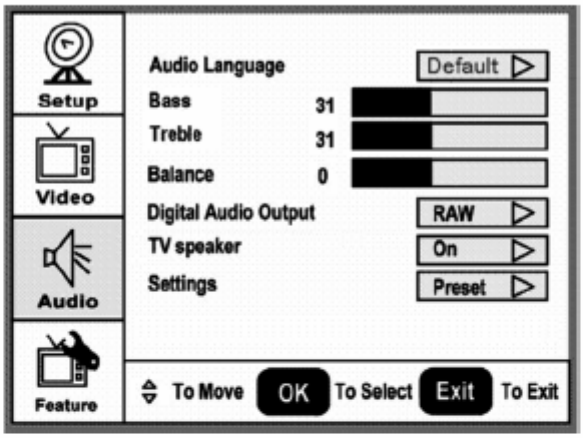

1.**Audio Language**:Change the audio language setting on ATSC TV programs The number of the supported audio languages depends on the ATSC TV programs.
2. **Bass**: Bass tone adjustment, the tuning range is 0 ~ 63. (The default state is enabled)
3. **Treble**: Treble tone adjustment, the tuning range is 0 ~ 63. (The default state is enabled)
4. **Balance**: Audio balance adjustment, the tuning range is L31 ~ R31.
5. **Digital Audio Output**: Digital audio output format selection, user can choose RAW (default) or PCM format or off.
6. **TV Speaker**: Choose to turn on / off the TV internal speaker. The digital audio output signals、earphone output signals will not be turn-off even though the TV speaker is off. The default setting is On.
7. **Settings**: Restore the default audio settings.

FEATURE MENU

The Feature menu in TV mode shows as below. It provides certain optional control functions such as time set, sleep timer, advanced video menu, Password Set, parental control (V-chip) and Digtal closed caption setting. This menu gives users the most flexibilities to satisfy their generally demands. According to the various requirements in different source modes, certain features should be hidden (disable) on the menu. The details footnotes will be described clearly below.

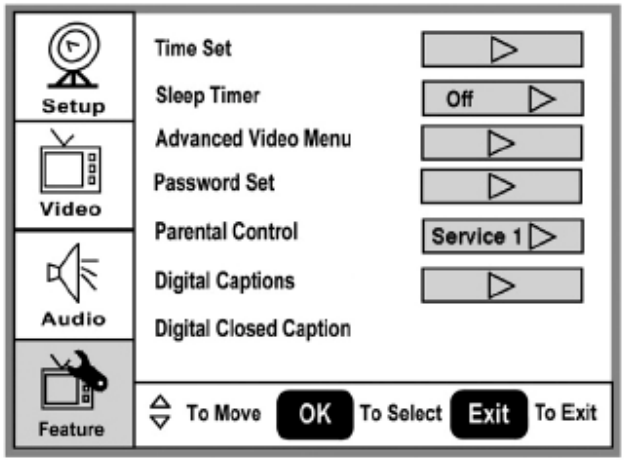

1. **Time Set**: Set current time. This sub-menu includes Time Set Mode ,**Time Zone** and **Time** items. 【Time Set Mode】user can choose Auto or Manual, 【Time Zone】item provides user to set current time zone, such as: Pacific、Alaska、Hawaii、Eastern、Central and Mountain. 【Time】item provides user to set the time clock.

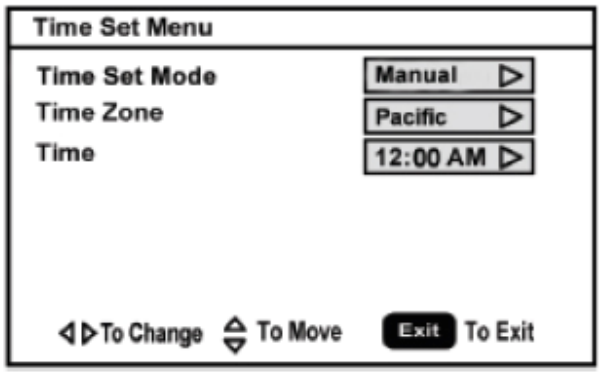

2. **Sleep Timer**: Enable or disable the TV standby timer. User can set the TV standby timer as off / 5 min / 10 min / 15 min/ 30 min / 45 min / 60 min/ 90 min / 120 min / 180min/ 240min. Timer starts to count down after cursor leaving the sub-menu. (At the moment, the item shows 『** min Left』 and the cursor highlights on the Feature icon.)

3. **Advanced Video Menu**: Provide the Noise Reduction、Color Temperature and 3D Y/C. Dynamic Contrast options for enhancing video quality.
【Noise Reduction】gives four NR effect degrees, such as: Low、Mid、High and Off. The default setting is Mid.

【Colour Temp】gives three color temperature modes as: Normal、Warm and Cool. The default mode is Warm.

【3D Y/C】provides On / Off switches. The default setting is On.

【 **Dynamic Contrast**】user can choose On or Off.

【Setting】restores the default advanced video option settings.

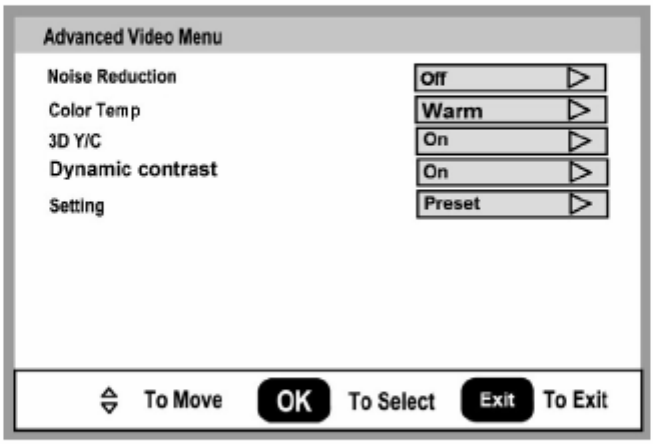

4. **Password Set**: Change the 4-numeral parental control password. Three steps are required for changing the password: Enter Old Password -> Enter New Password -> Confirm New Password. Note: This item is only available in TV, Composite and S-Video source modes. The default password is 『0 0 0 0』.

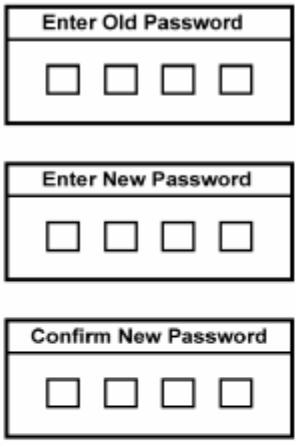

5. **Parental Control**: provide the parental Control (V-chip) function setting. Before entering the Parental Control sub-menu, user has to key in the password first. Then enter the Parental Lock item, User can modify the restricted table about MPAA or TV Rating respectively. While exiting the sub-menu, the parental control function is working. The inhibitive channels or source signals can be un-lock through pressing the V-CHIP key on the remote control and then key in the correct password. Note: This feature is only available in TV, Composite and S-Video source modes. (The default password is: 0 0 0 0.)

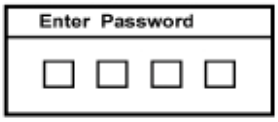

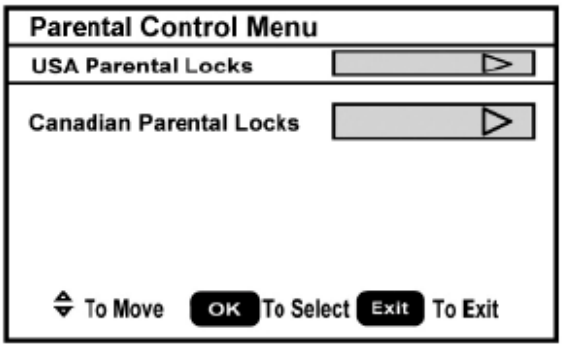

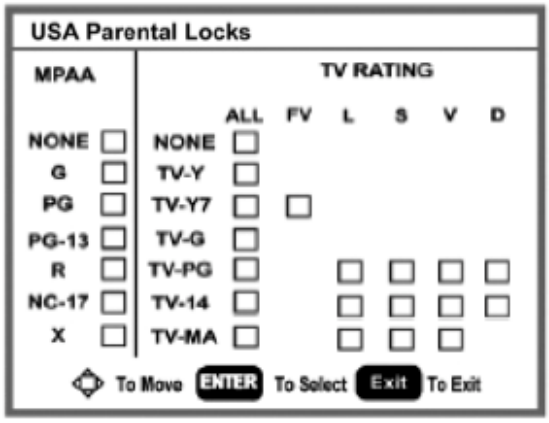

6. **Digital Captions**: Select the close caption options (Service 1-6, Text 1-4 and CC 1-4) in digital TV mode. When select service 1 to service 6 you canmodulate parameters in the Digital Close Caption.
7. **Digital Close Caption**: Provide numerous options for setting the digital close caption style. In the sub-menu.
【Style】item can be set as Automatic or Custom mode. If Custom mode is selected, user can modify the detail styles described below. The setting result will be shown immediately on the bottom side of the sub-menu OSD. Note: This feature is only available in Digital TV(ATSC) mode.

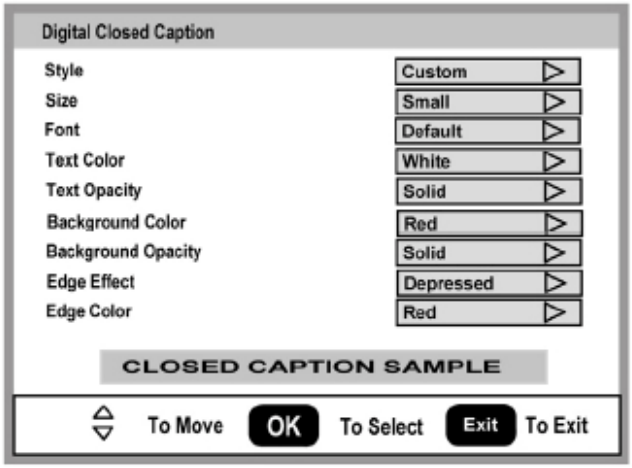

【Size】: Digital close caption font size, which can be set as Small、Normal or Large.

【Font】: Digital close caption font style, which can be chosen as Default or Font 1 ~ 7.

【Text Color】: Giving Red / Green / Blue/ Yellow / Magenta / Cyan / Black / White Colors.

【Text Opacity】: Giving Transparent / Translucent / Solid / Flashing modes.

【Background Color】: Giving Red / Green / Blue / Yellow / Magenta / Cyan / Black / White Colors.

【Background Opacity】: Giving Transparent / Translucent / Solid / Flashing modes.

【Edge Effect】: The text edge effects, which gives None / Raised / Depressed / Uniform / Left Shadow / Right Shadow modes.

【Edge Color】: The colors of text edge effects, which provides Red / Green / Blue / Yellow / Magenta / Cyan / Black / White Colors.

8. **Component Set**: This option only shows and is available in component mode, which provides fine tuning component display, such as: 【H-Position】、【V-Position】, 【Clock】, 【Phase】 and 【Auto Adjust】.All these items are giving the tuning range from 0 to 100.【Setting】item providesthe default componentsetting values restoring.

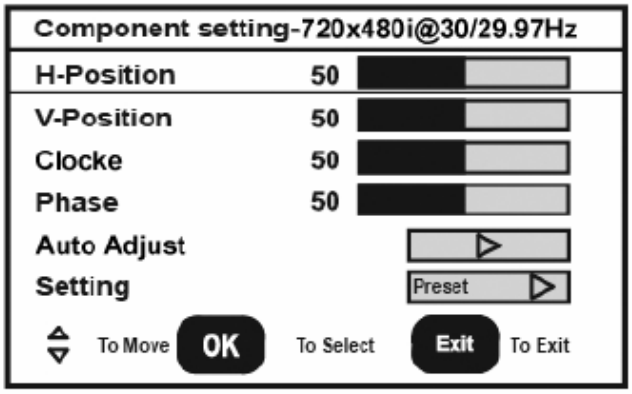

9. **VGA Set**: This option only shows and is available in VGA mode, which provides several items for the VGA display fine tuning, such as : 【H-Position】、【V-Position】、【Clock】and 【Phase】. All these items giving the tuning range from 0 to 100.【Setting】item provides the default VGA setting values restoring.

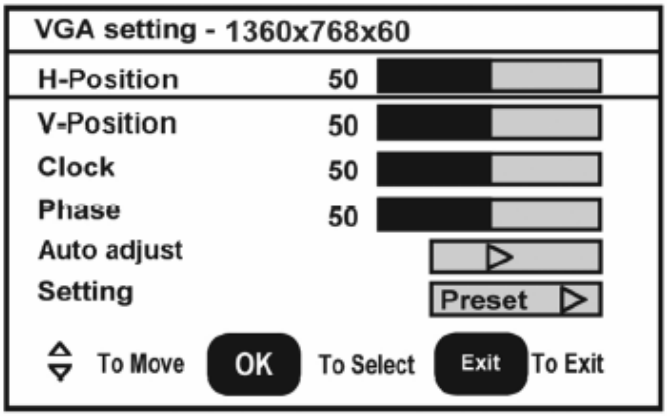

2.4 How to Connect

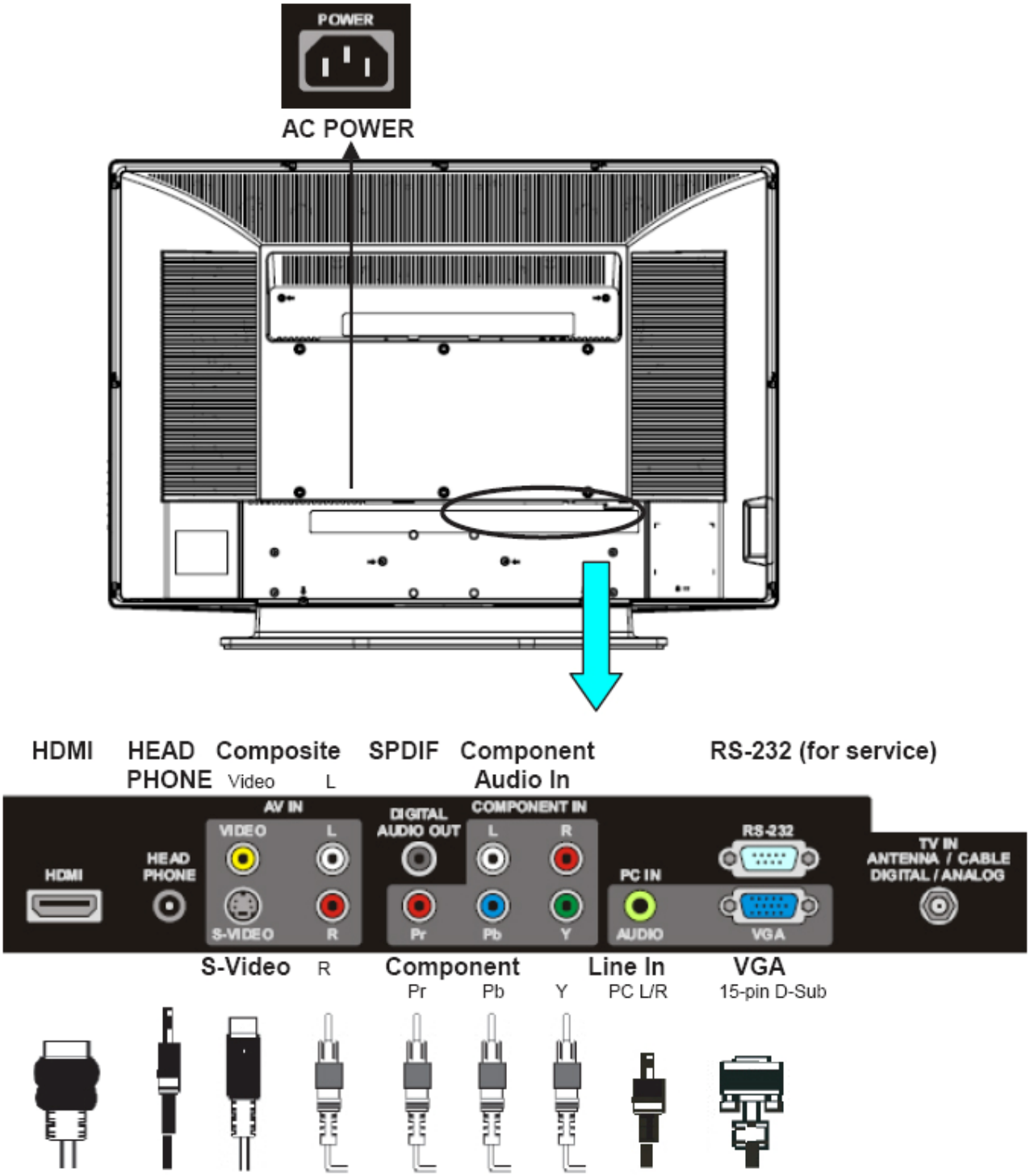

Once your equipment is connected, use the following procedure to view the input signal:
Press the source button on the remote controller to select the relevant source to view. (ex: Press VIDEO button to select “Composite Rear” if you have connected a video recorder to Composite Rear socket.)

Note: The MUTE key on the remote control works on both TV internal speaker and the earphone output.

3. Input/ Output Specification

3.1 Input Signal connector

This procedure gives you instructions for installing and using the LCD TV display.

Lay the display on the desired operation and plug the power cord into a convenient AC outlet. Three-wire power cord must be shielded and is provided as a safety precaution as it connects the chassis and cabinet to the electrical conduct ground. If the AC outlet in your location does not have provisions for the grounded type plug, the installer should attach the proper adapter to ensure a safe ground potential.

Connect the 15-pin D-SUB color display shielded signal cable to your signal system device and lock both screws on the connector to ensure firm grounding. The connector information is as follow:

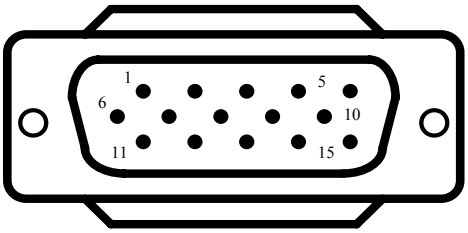

15 - Pin Color Display

Pin No.	Description
1	Red Video
2	Green Video
3	Blue Video
4	SCL (Remote Control)
5	GROUND
6	Red Ground
7	Green Ground
8	Blue Ground
9	No Pin!
10	Sync Ground
11	SDA (Remote Control)
12	Serial Data for DDC
13	H-Sync.
14	V-Sync.
15	Serial Clock for DDC

Apply power to the display by turning the power switch to the "ON" position and allow about ten seconds for Panel warm-up. The Power-On indicator lights "GREEN" when the display is on.

With proper signals feed to the display, a pattern or data should appear on the screen, adjust the brightness and contrast to the most pleasing display, or press auto-adjust to get the best picture-quality.

This TV (with PC function) has power saving function following the VESA DPMS. Be sure to connect the signal cable to the PC.

If your TV requires service, it must be returned with the power cord.

3.2 RGB Input Signal Timing

VESA MODES							
			Horizontal		Vertical		
Mode	Resolution	Total	Nominal Frequency (KHz)	Sync Polarity	Nominal Freq. (Hz)	Sync Polarity	Nominal Pixel Clock (MHz)
VGA	640x480@60Hz	800 x 525	31.469	N	59.940	N	25.175
	640x480@72Hz	832 x 520	37.861	N	72.809	N	31.500
	640x480@75Hz	840 x 500	37.5	N	75	N	31.500
SVGA	800x600@56Hz	1024 x 625	35.156	P	56.25	P	36.000
	800x600@60Hz	1056 x 628	37.879	P	60.317	P	40.000
	800x600@72Hz	1040 x 666	48.077	P	72.188	P	50.000
	800x600@75Hz	1056 x 625	46.875	P	75	P	49.5
XGA	1024x768@60Hz	1344x806	48.363	N	60.004	N	65.000
	1024x768@70Hz	1328x806	56.476	N	70.069	N	75.000
	1024x768@75Hz	1312x800	60.023	P	75.029	P	78.750
WXGA	1360x768@60Hz	1792x795	47.712	P	60.015	P	85.5

4. Mechanical Instructions

Step	Figure	Description
Preparation		Lay the LCD-TV on a flat, soft and clean surface.
Remove the stand.	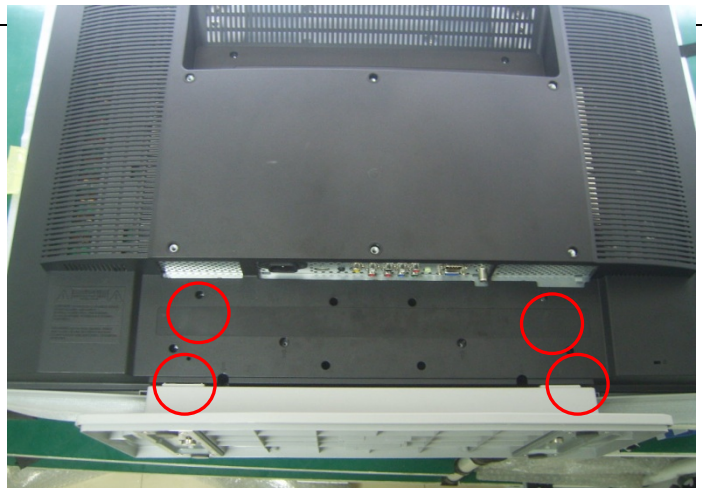	Remove the screws remarked on red to remove the stand.
Remove rear cover.	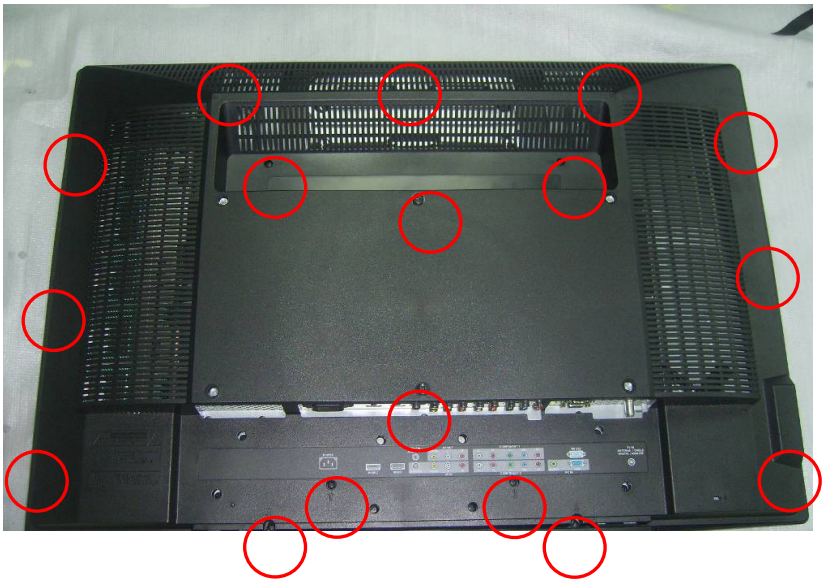	Remove the screws marked in red to remove the rear cover.

Remove shield cover.	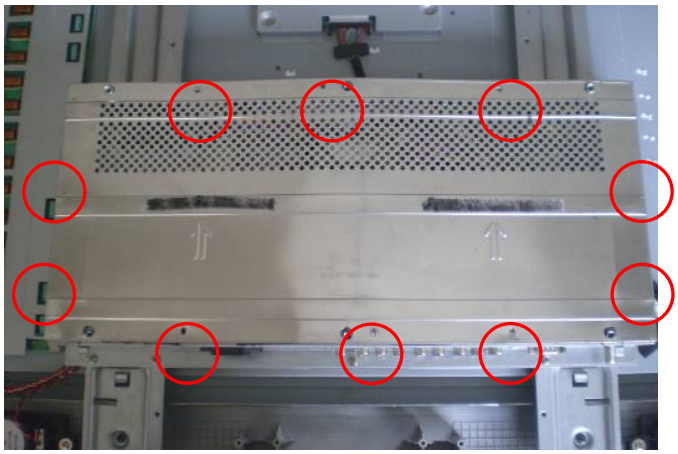	Remove the screws marked in red to remove the shield cover.
Remove IO BKT.	 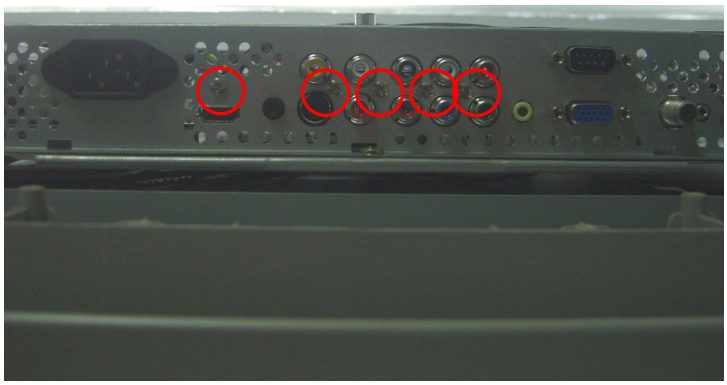 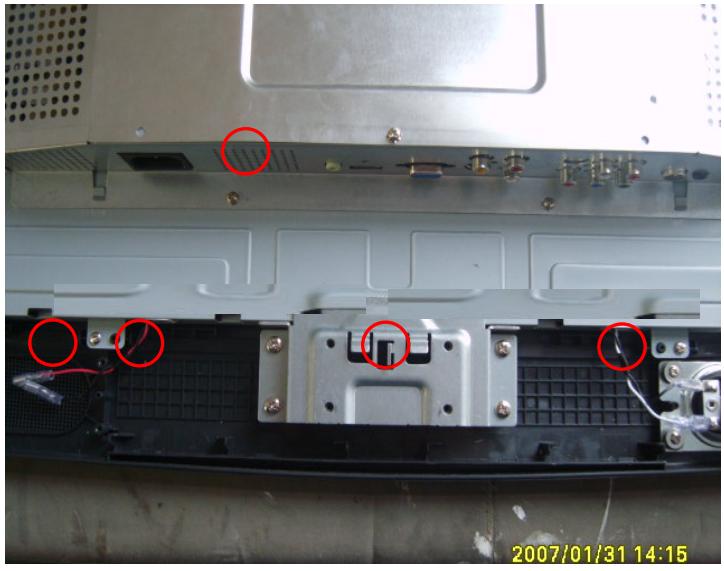	Remove the screws in red marked to remove IO BKT.

Remove the main board, power board.	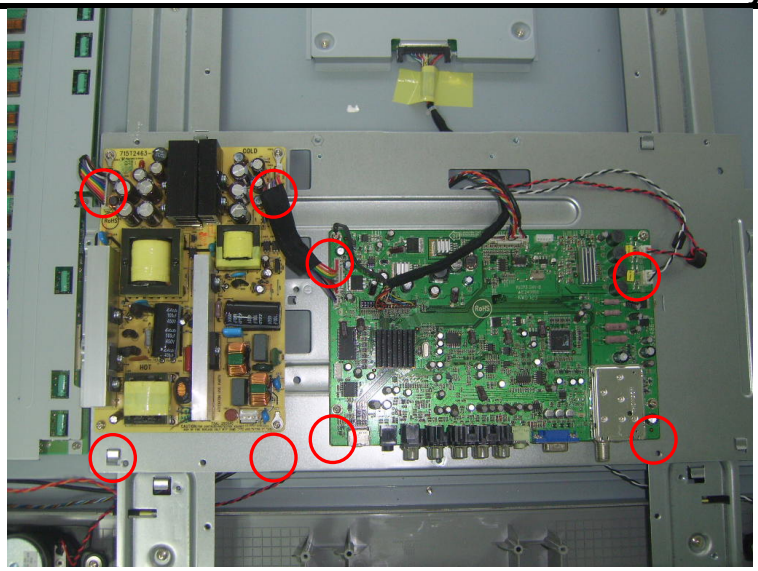	Remove the screws marked in red to remove the main board, power board .
Remove Speakers.	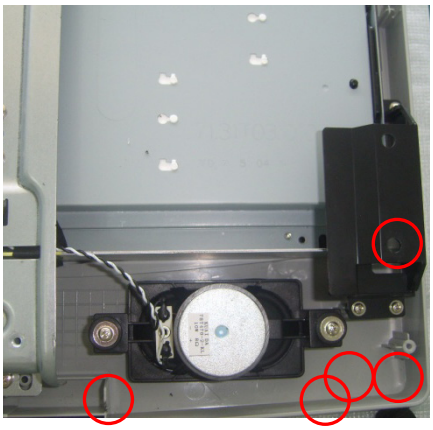 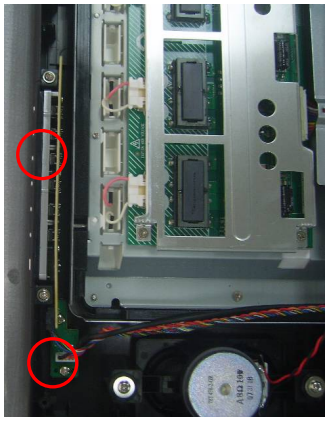	Remove the screws marked in red to remove the speakers and the side board.
Remove the PCB BKT	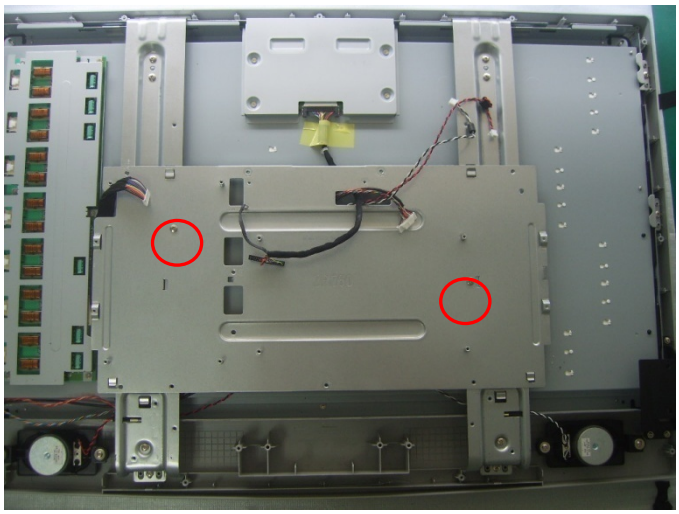	Remove the screws marked in red to remove the PCB BKT.

Remove the PANEL BKT(L and R)	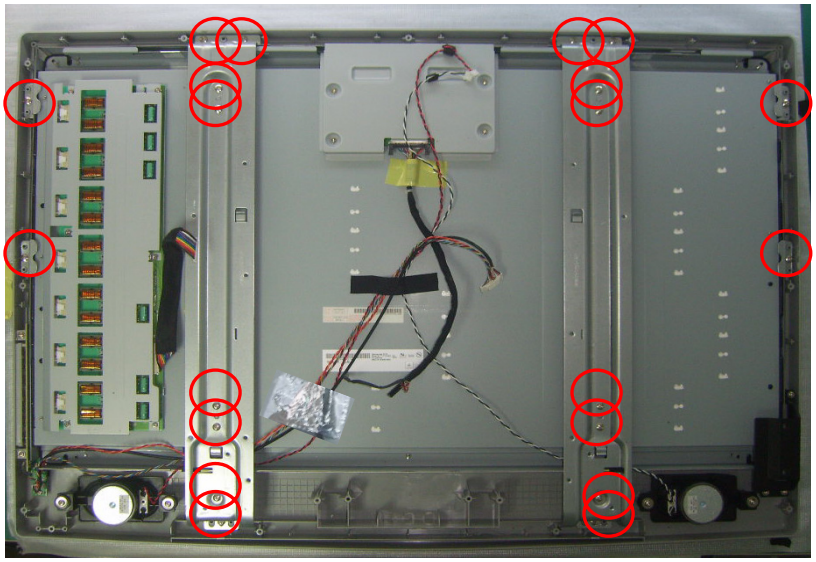	Remove the screws marked in red to remove the PANEL BKT(L and R)
The end		N/A

5. Repair Flow Chart

5.1 No Power (No LED indicator)

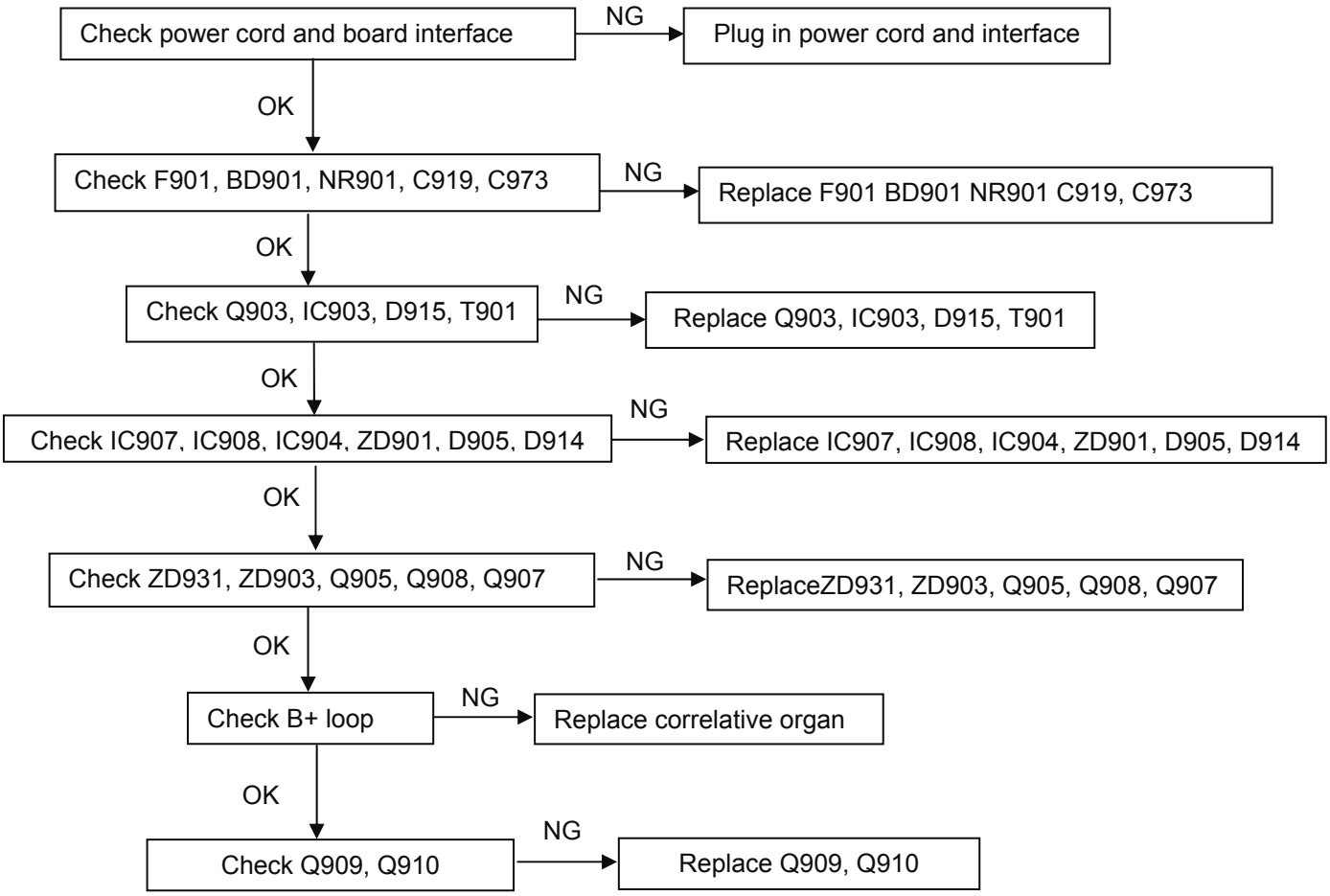

5.2 Can not start (LED indicator yellow)

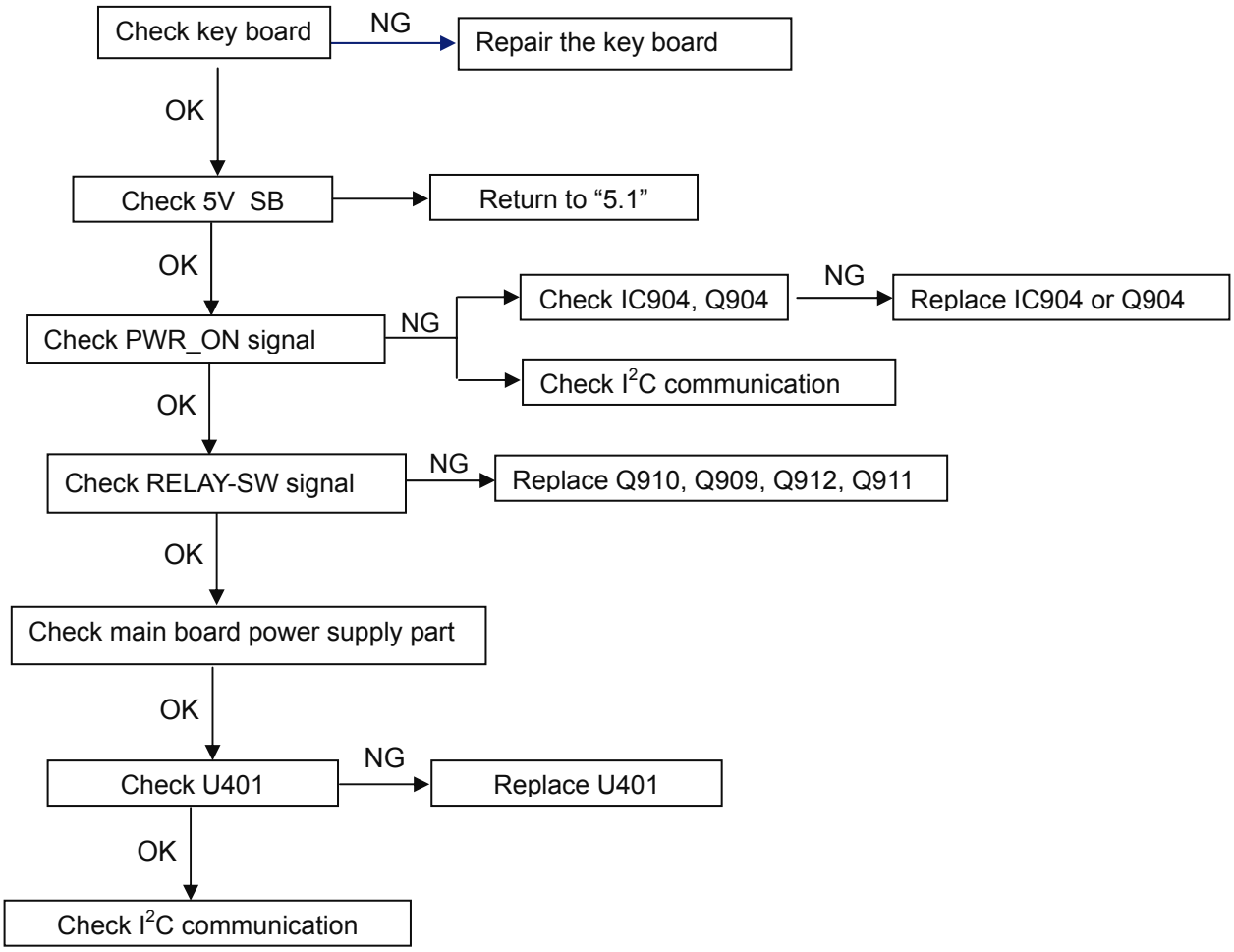

5.3 Abnormal display

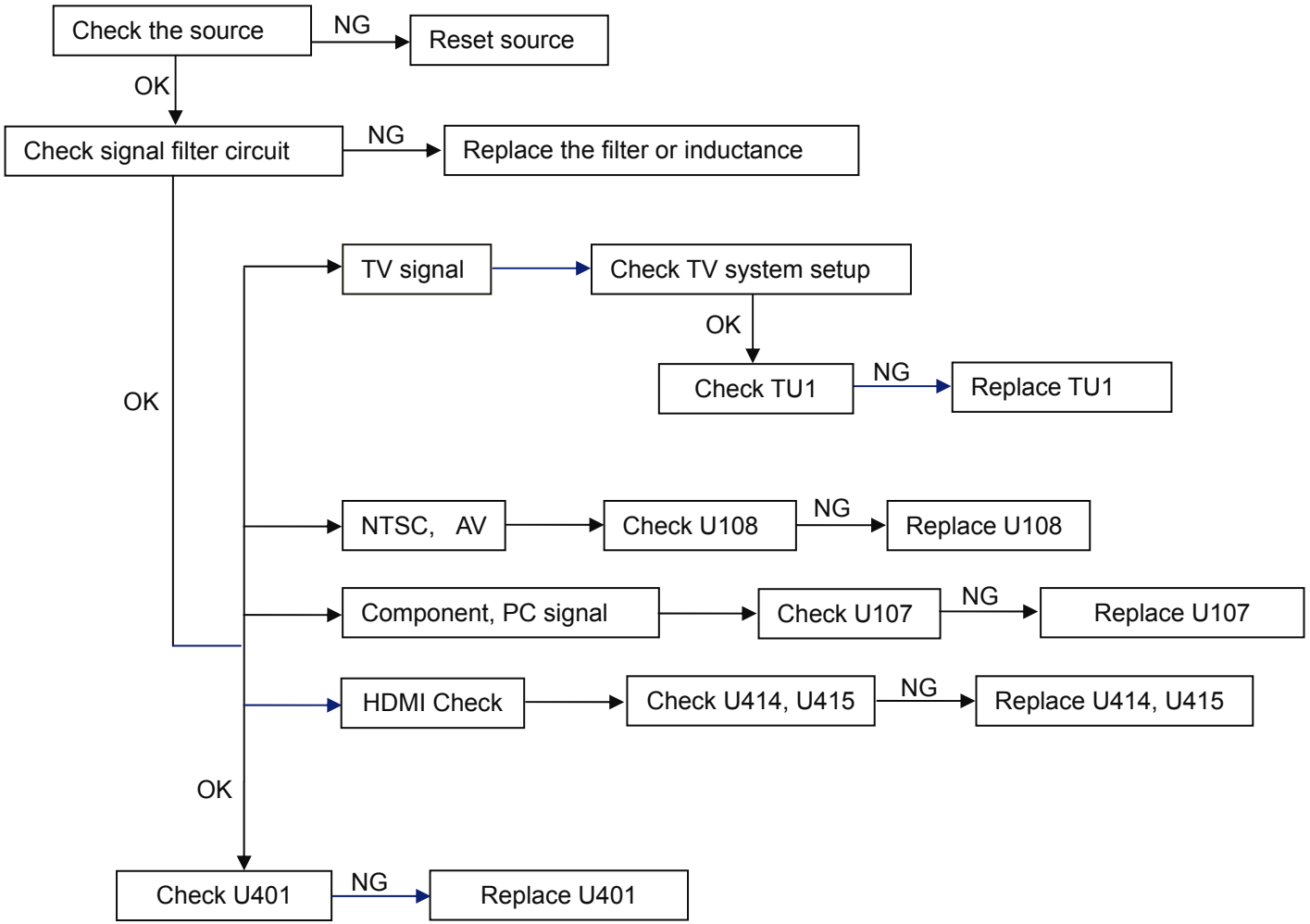

5.4 No sound

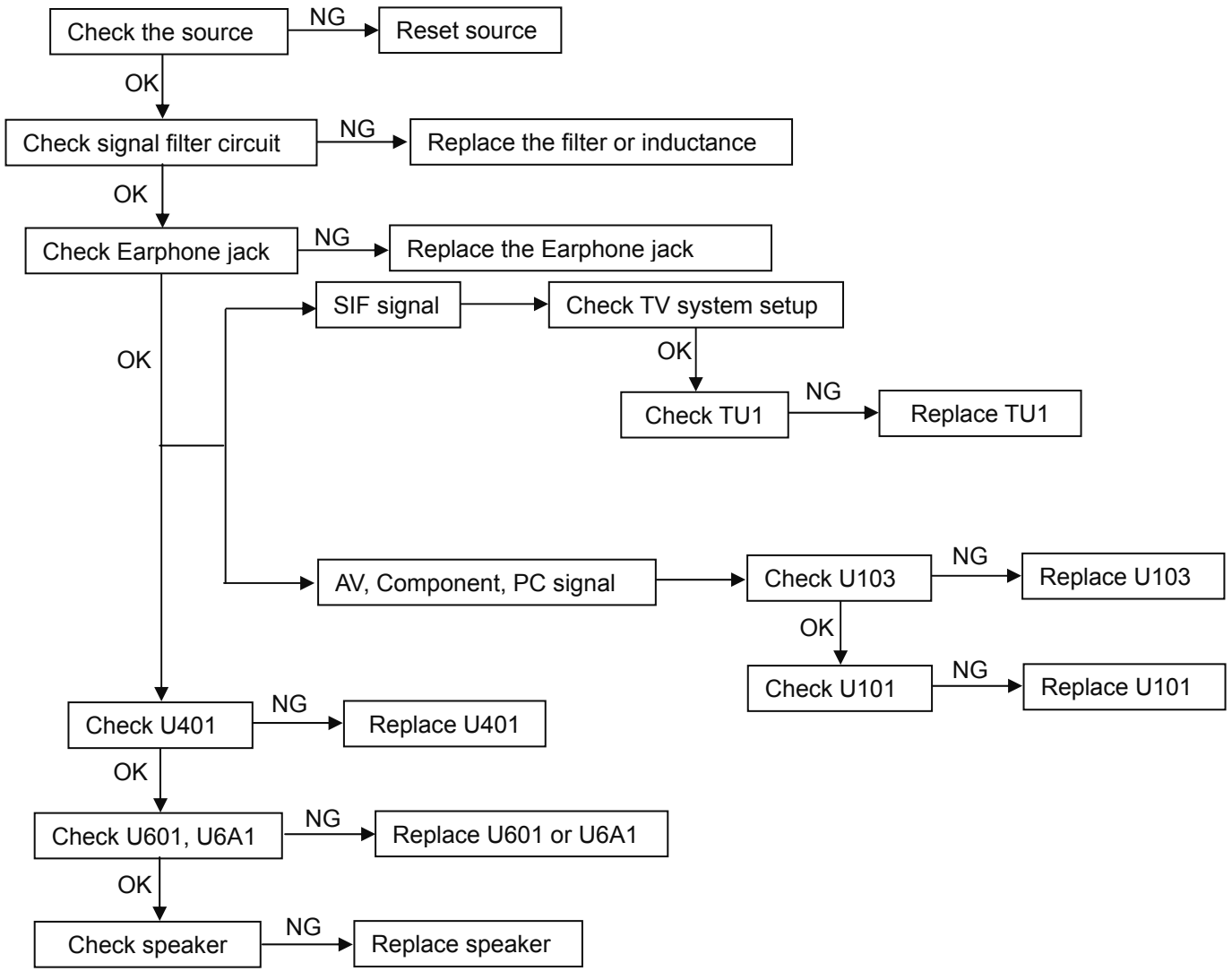
Check the source
NG
Reset source
OK
Check signal filter circuit
NG
Replace the filter or inductance
OK
Check Earphone jack
NG
Replace the Earphone jack
OK
SIF signal
Check TV system setup
OK
Check TU1
NG
Replace TU1
AV, Component, PC signal
Check U103
NG
Replace U103
OK
Check U101
NG
Replace U101
Check U401
NG
Replace U401
OK
Check U601, U6A1
NG
Replace U601 or U6A1
OK
Check speaker
NG
Replace speaker

5.5 Key Board

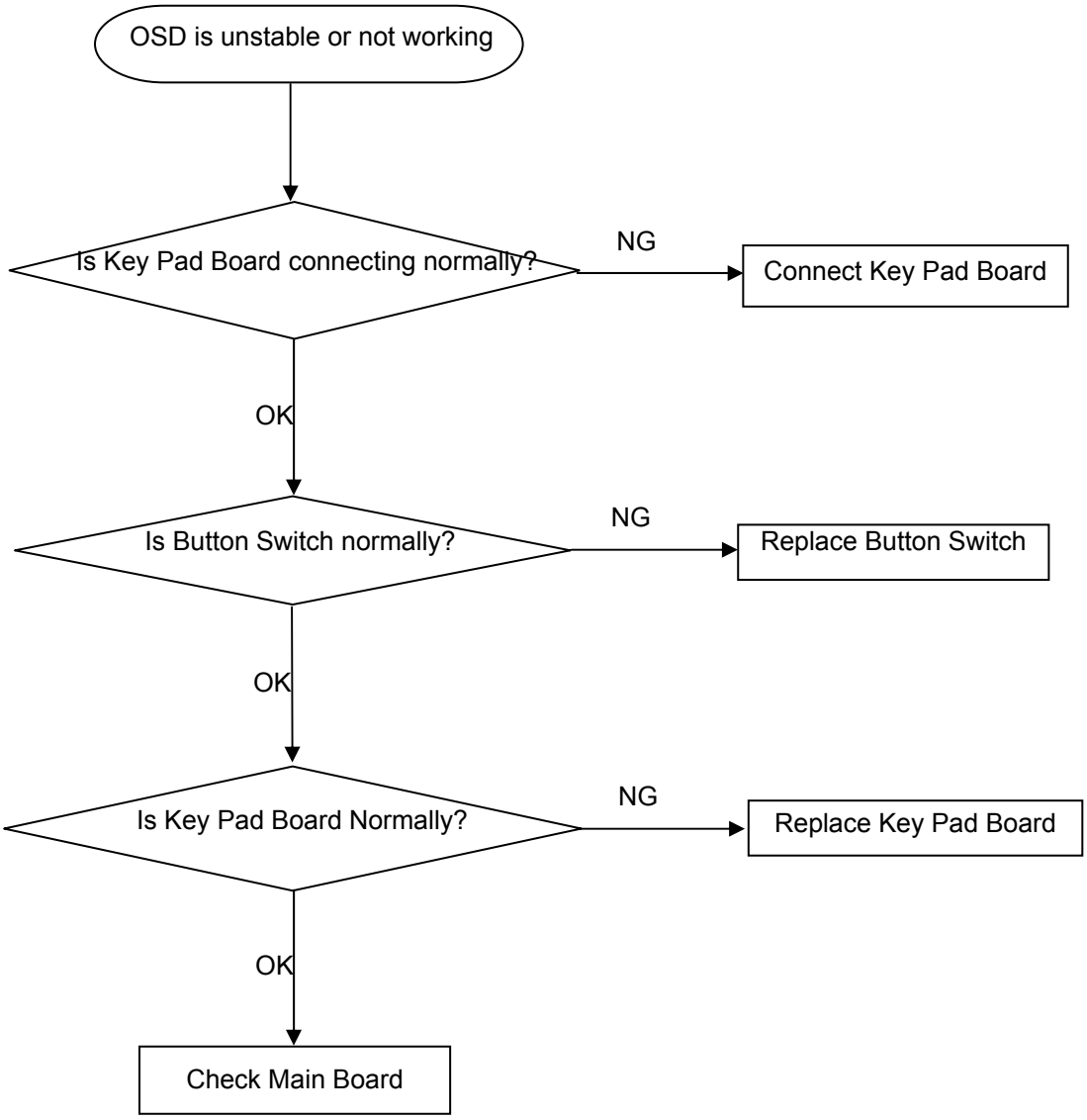
OSD is unstable or not working
Is Key Pad Board connecting normally?
NG
Connect Key Pad Board
OK
Is Button Switch normally?
NG
Replace Button Switch
OK
Is Key Pad Board Normally?
NG
Replace Key Pad Board
OK
Check Main Board

6. White Balance, Luminance Adjustment

It is not necessary to adjust the white balance of the TV.

7. PCB Layout

7.1 Main Board

715T2486-2

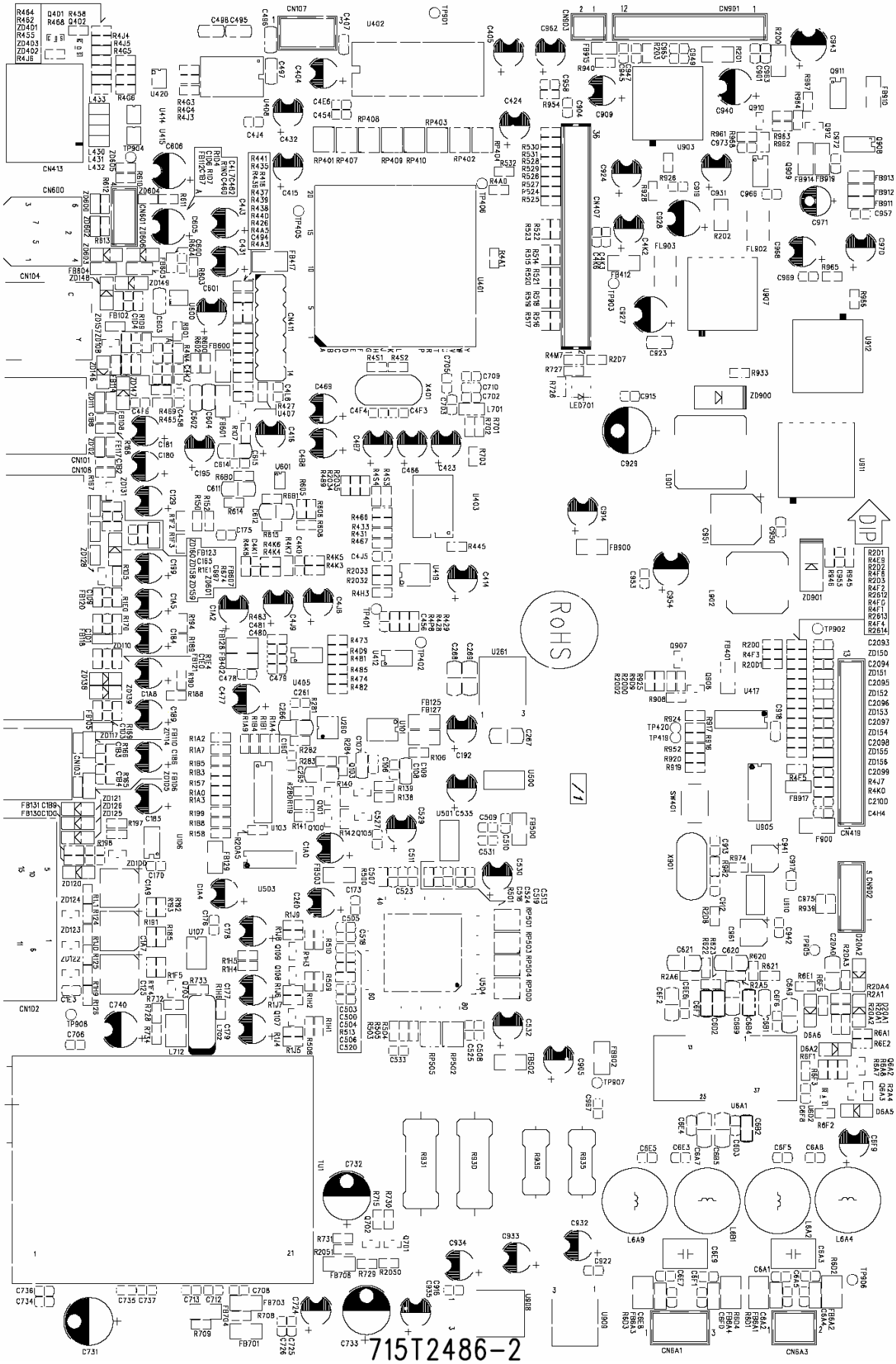

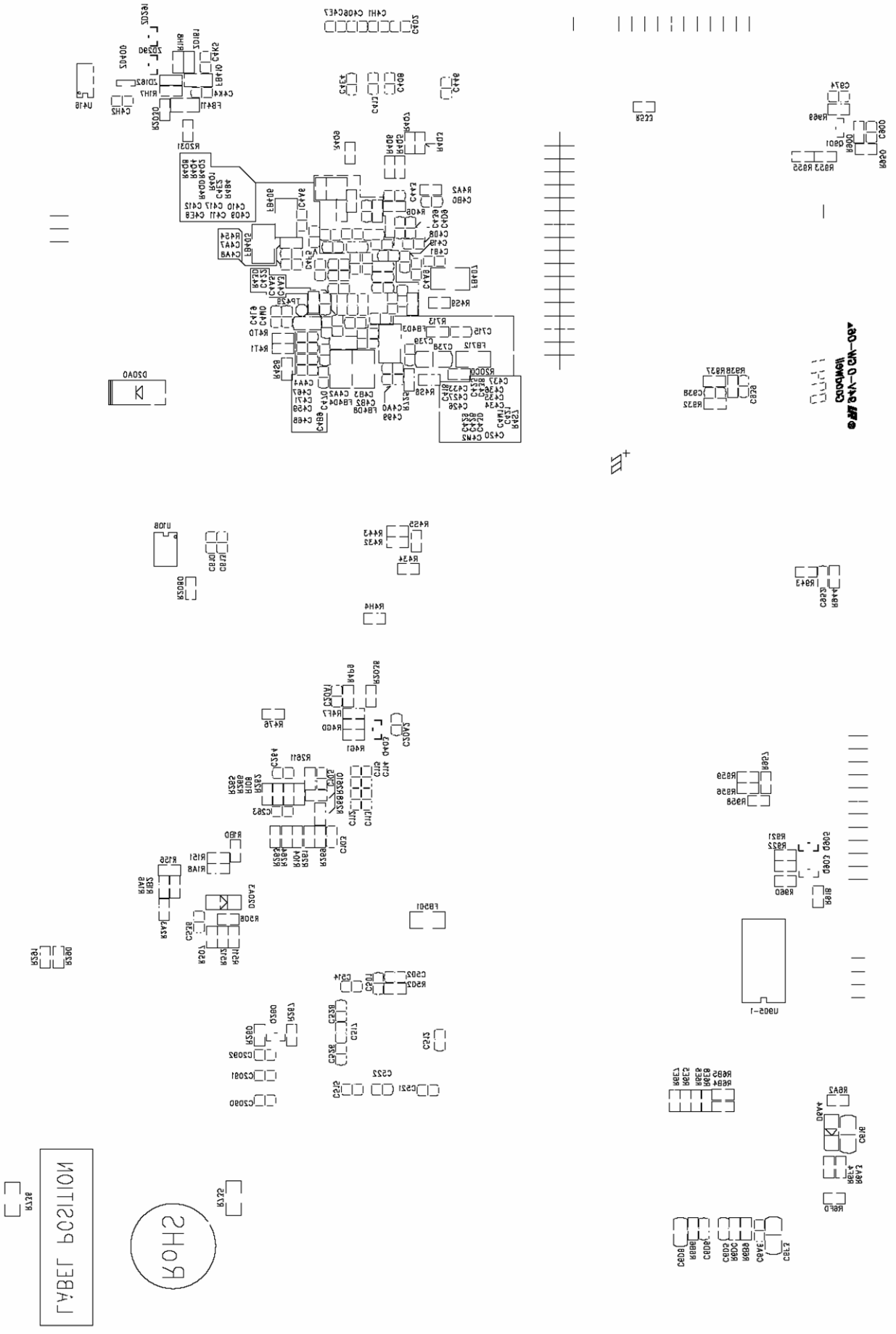

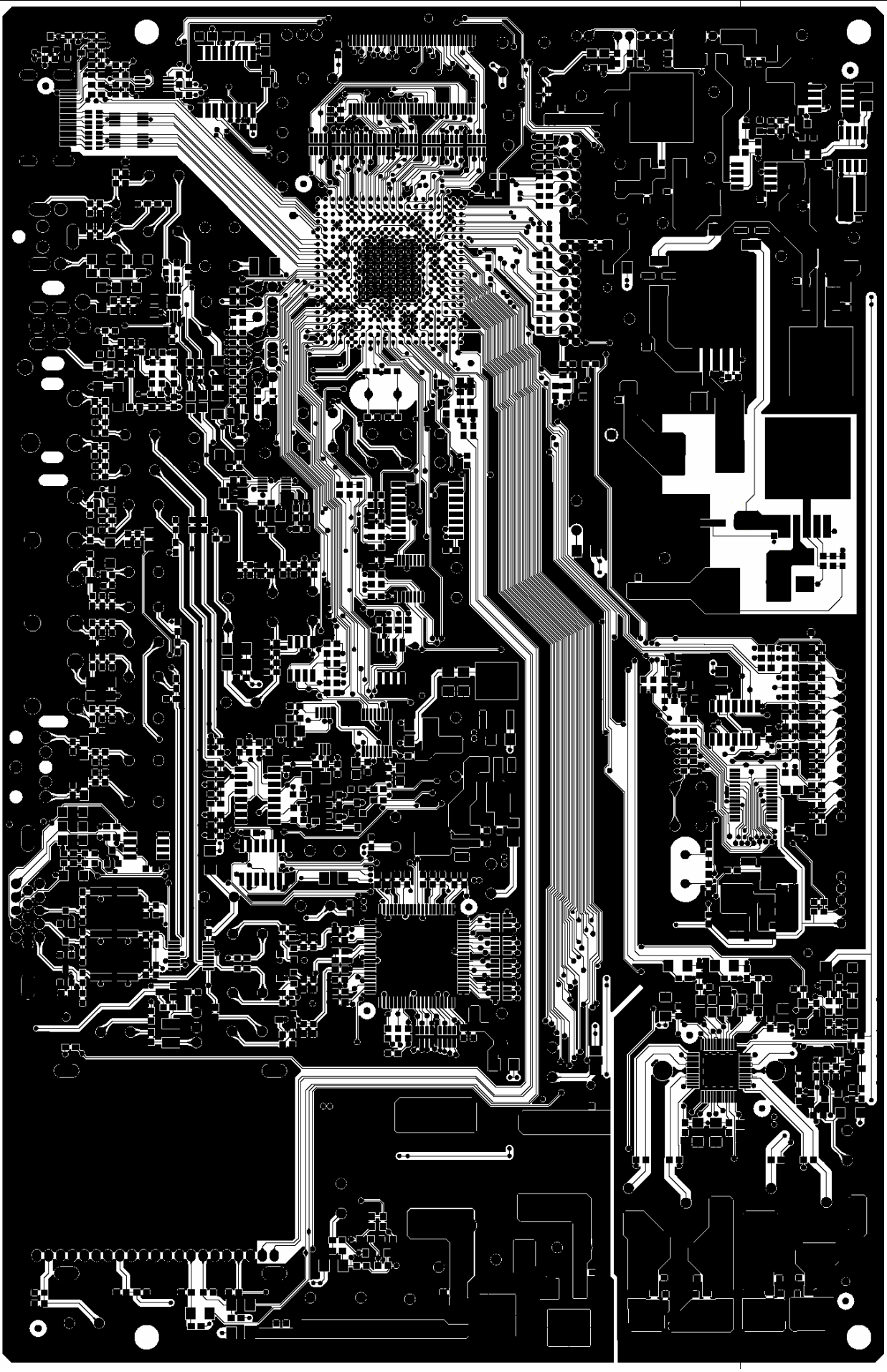

7.2 Power Board

715T2463-3

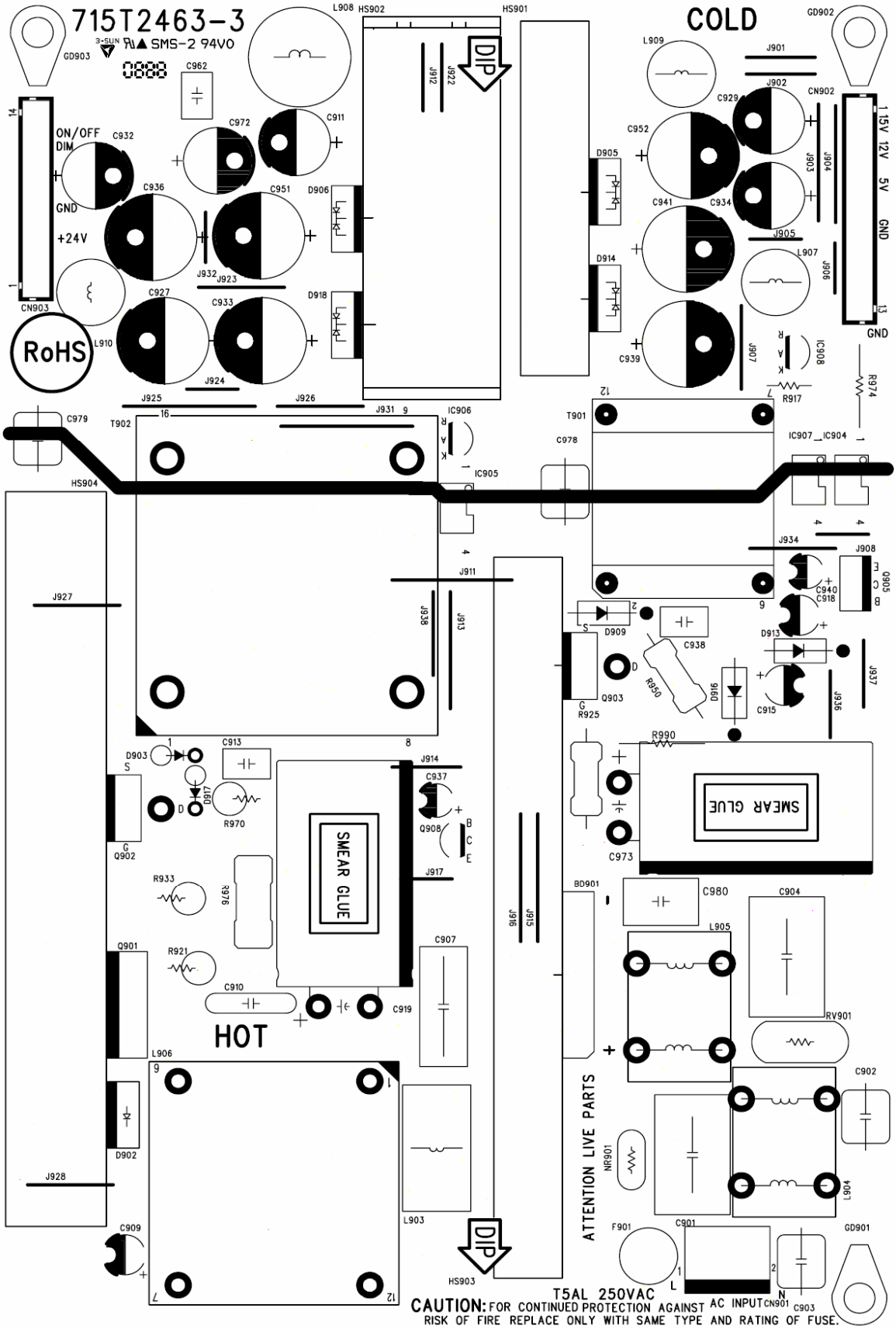

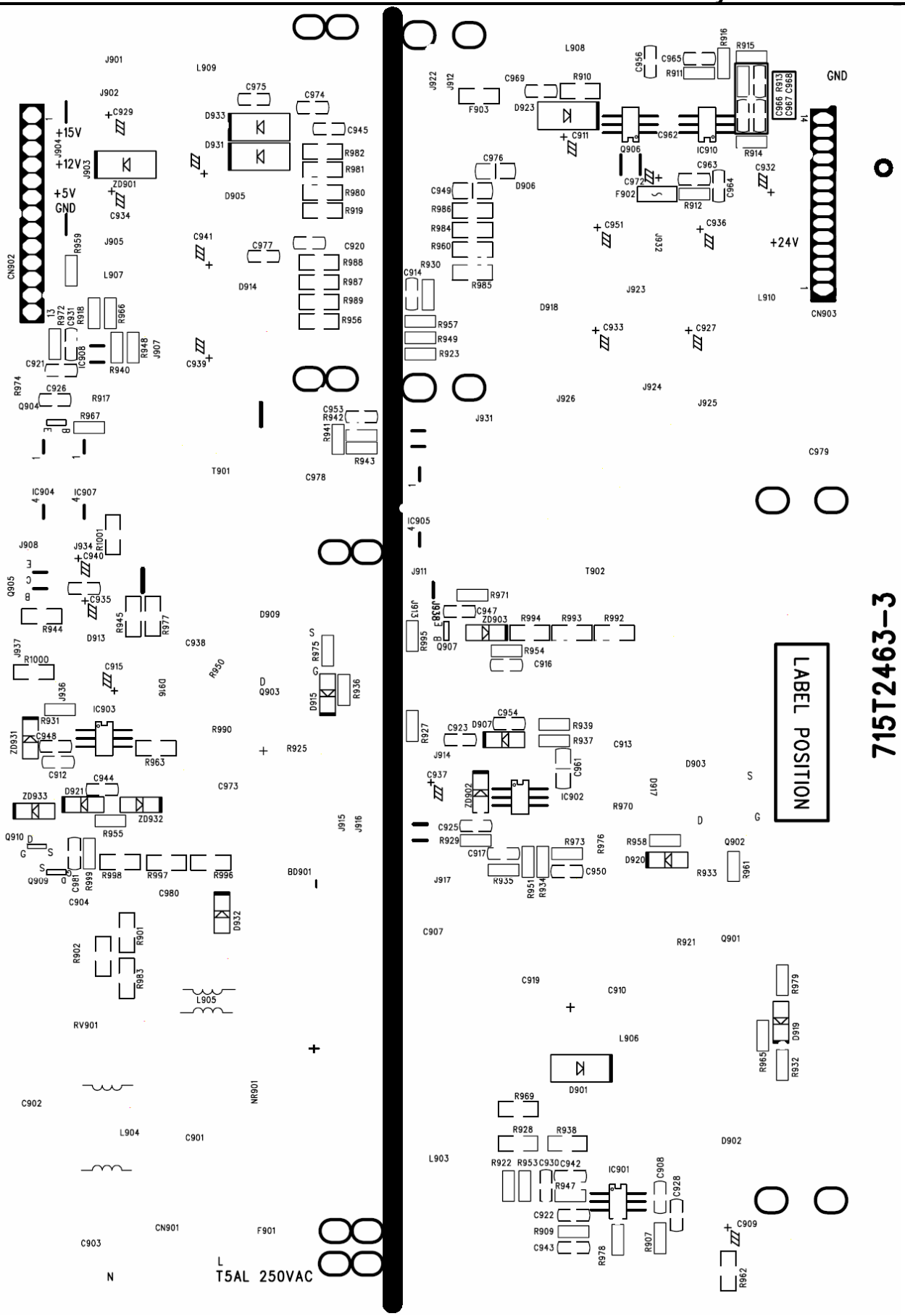
+15V
+12V
+5V
GND
+24V
GND
LABEL POSITION
715T2463-3
T5AL 250VAC
N
L

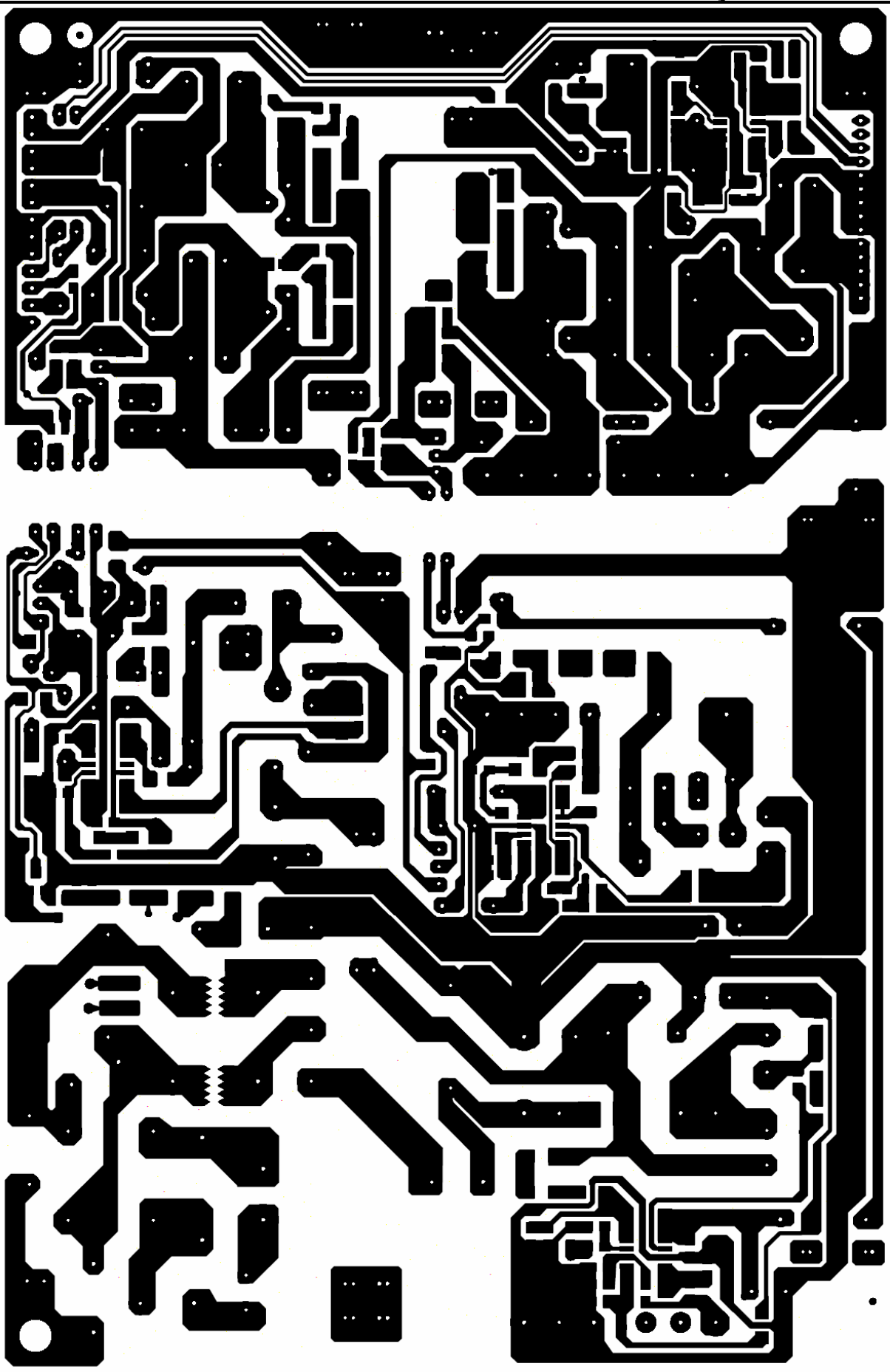

7.3 IR Board

715T2471-1-2

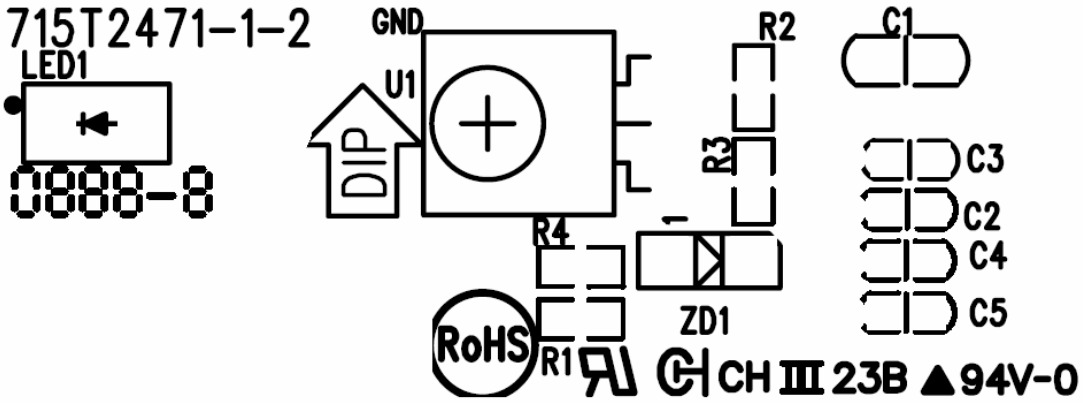

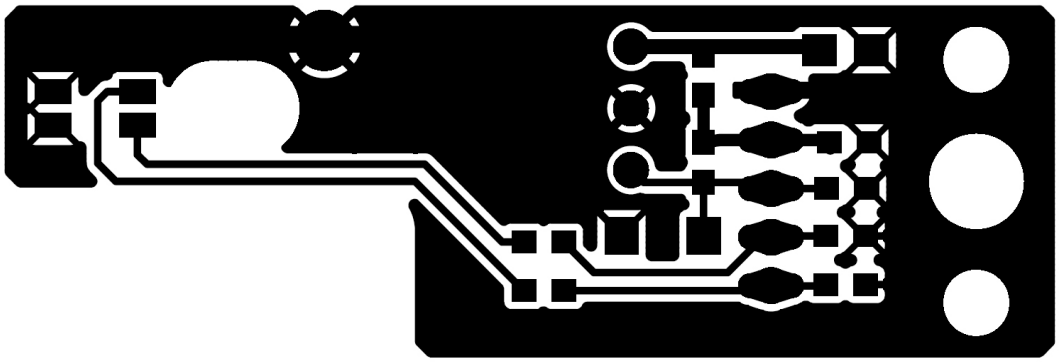

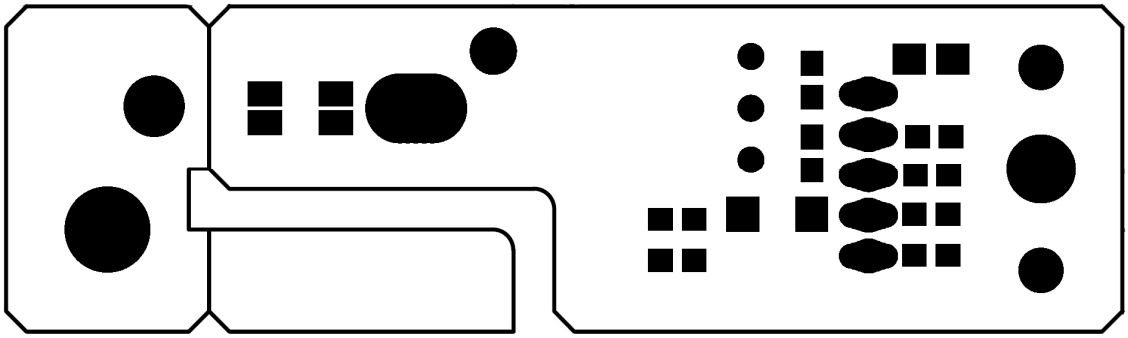

7.4 Key Board

715T2470-1

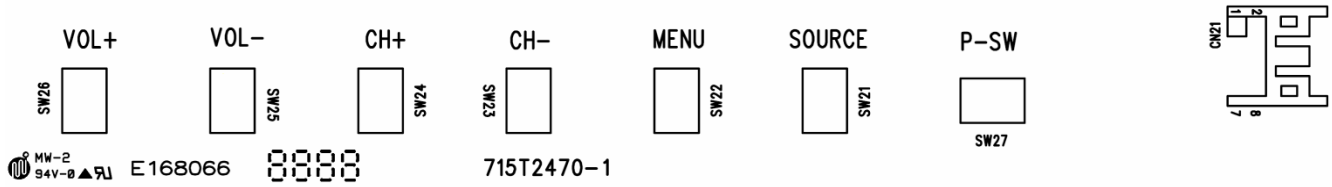

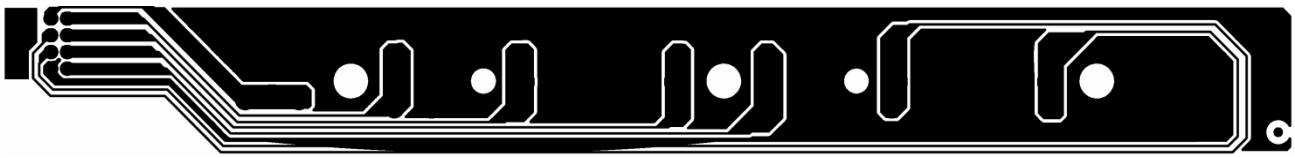

8. Block Diagram

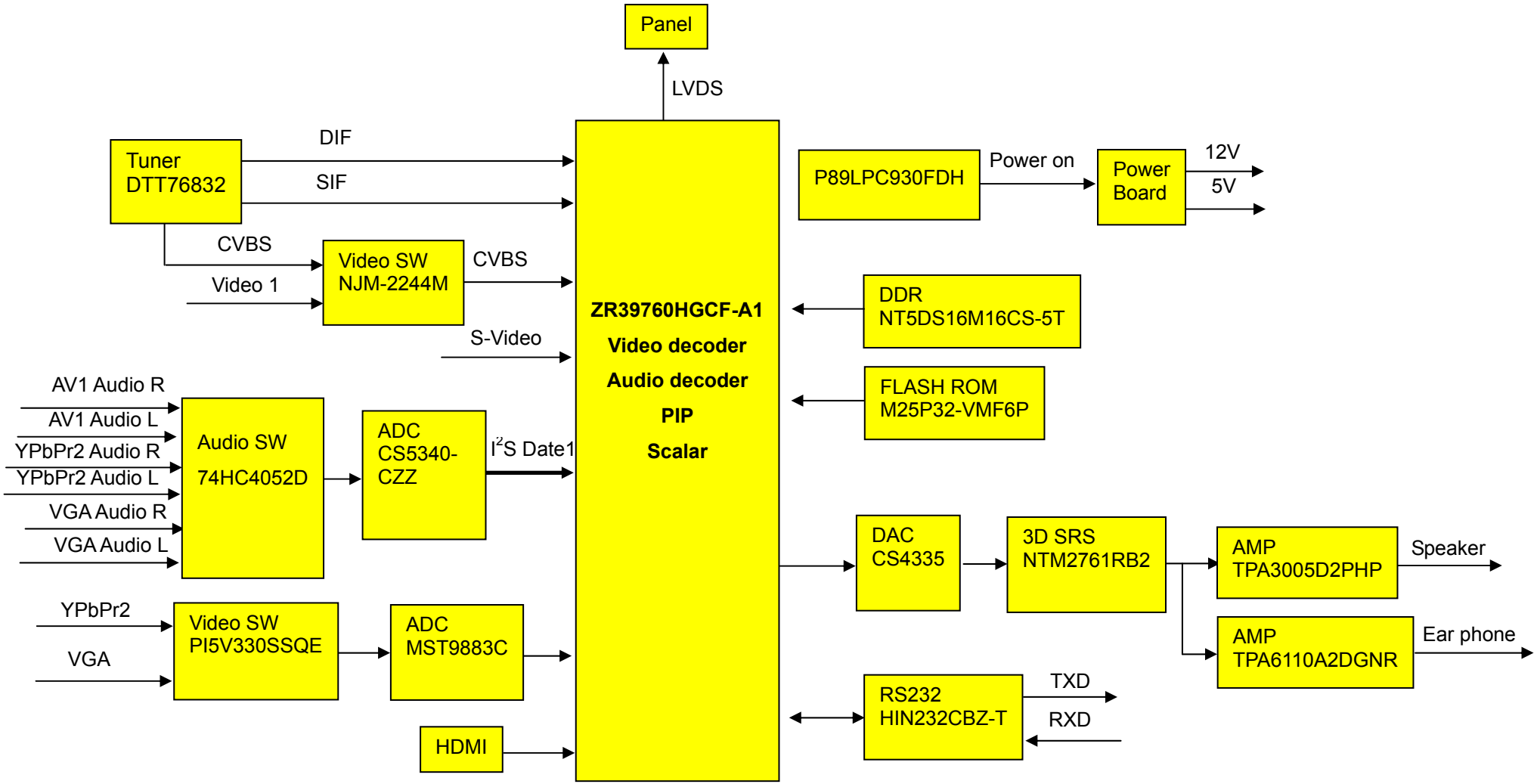

9. Schematic Diagram

9.1 Main Board

715T2486-2

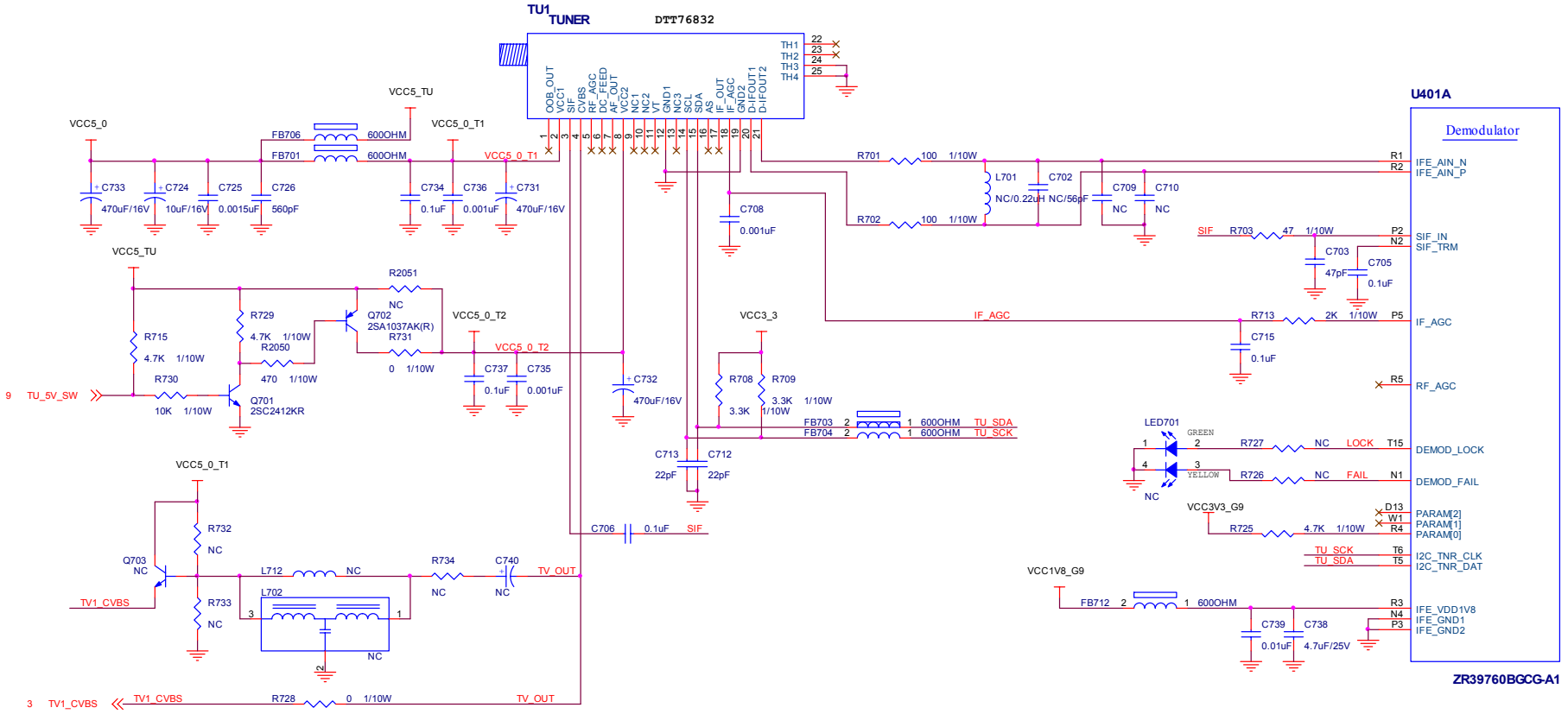

T P V (Top Victory Electronics Co . , Ltd.)		OEM MODEL	HCLD-32ZT4	Size	Custom
話 隔 瓜 編 腹	715T2486 2	TPV MODEL		Rev	H
Key Component	02-Tuner and Demodulator	PCB NAME	715T2486	称 爹	<称爹>
Date	Friday, August 10, 2007	Sheet	2 of 15		

AV Input

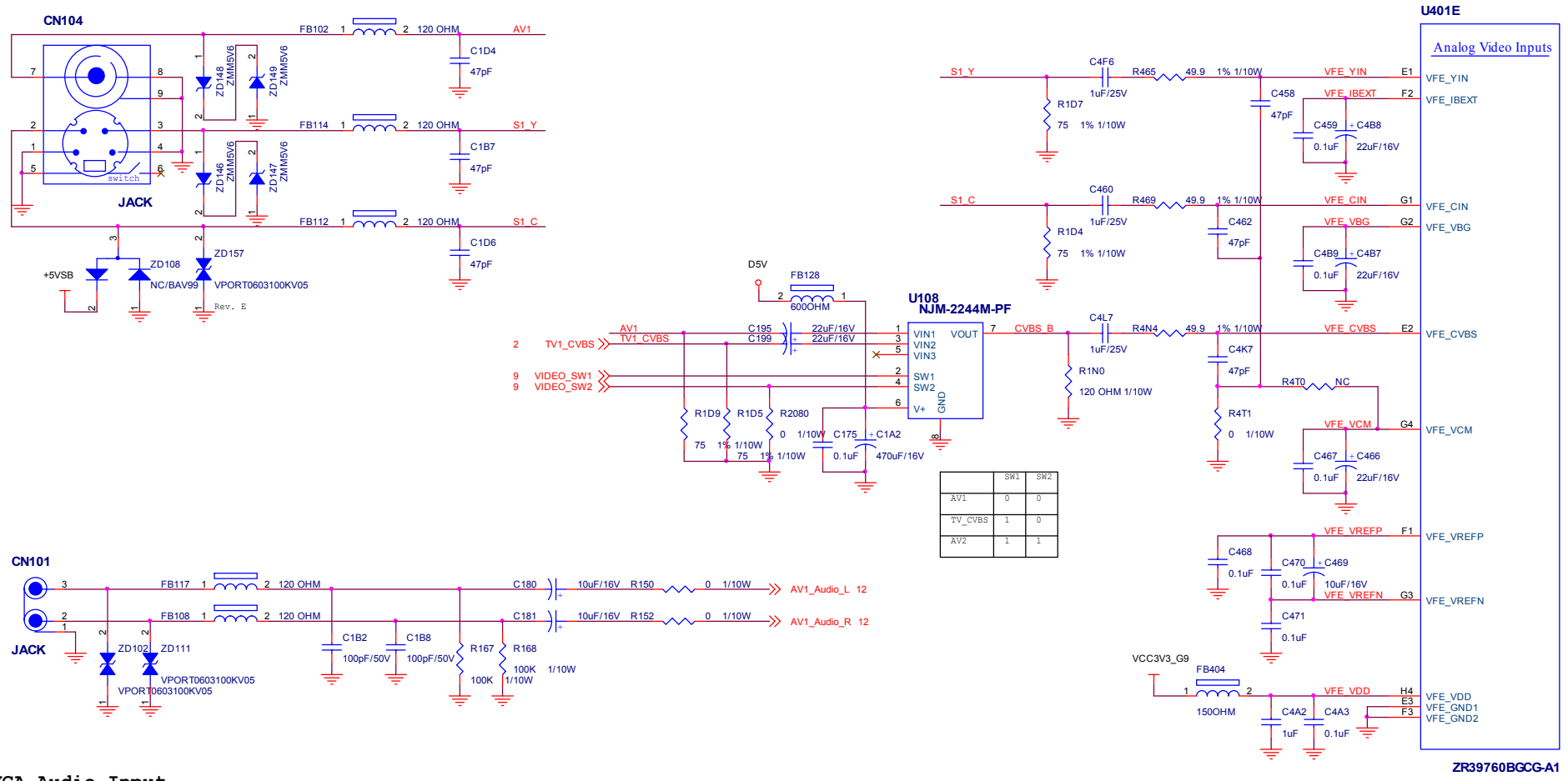

VGA Audio Input

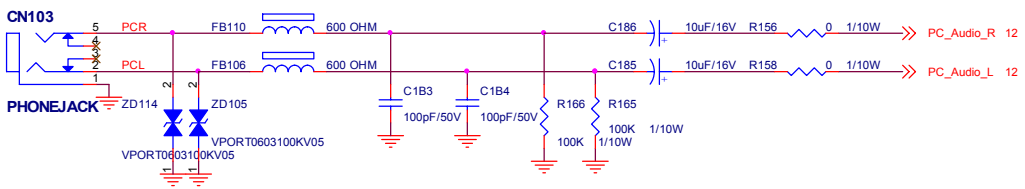

T P V (Top Victory Electronics Co., Ltd.)		OEM MODEL	HLCD-32ZT4	Size	Custom
結 隔 瓜 綢 腹	715T2486 2	TPV MODEL		Rev	H
Key Component	03-AV Input	PCB NAME	715T2486	称爹	<称爹>
Date	Friday, August 10, 2007	Sheet	3 of 15		

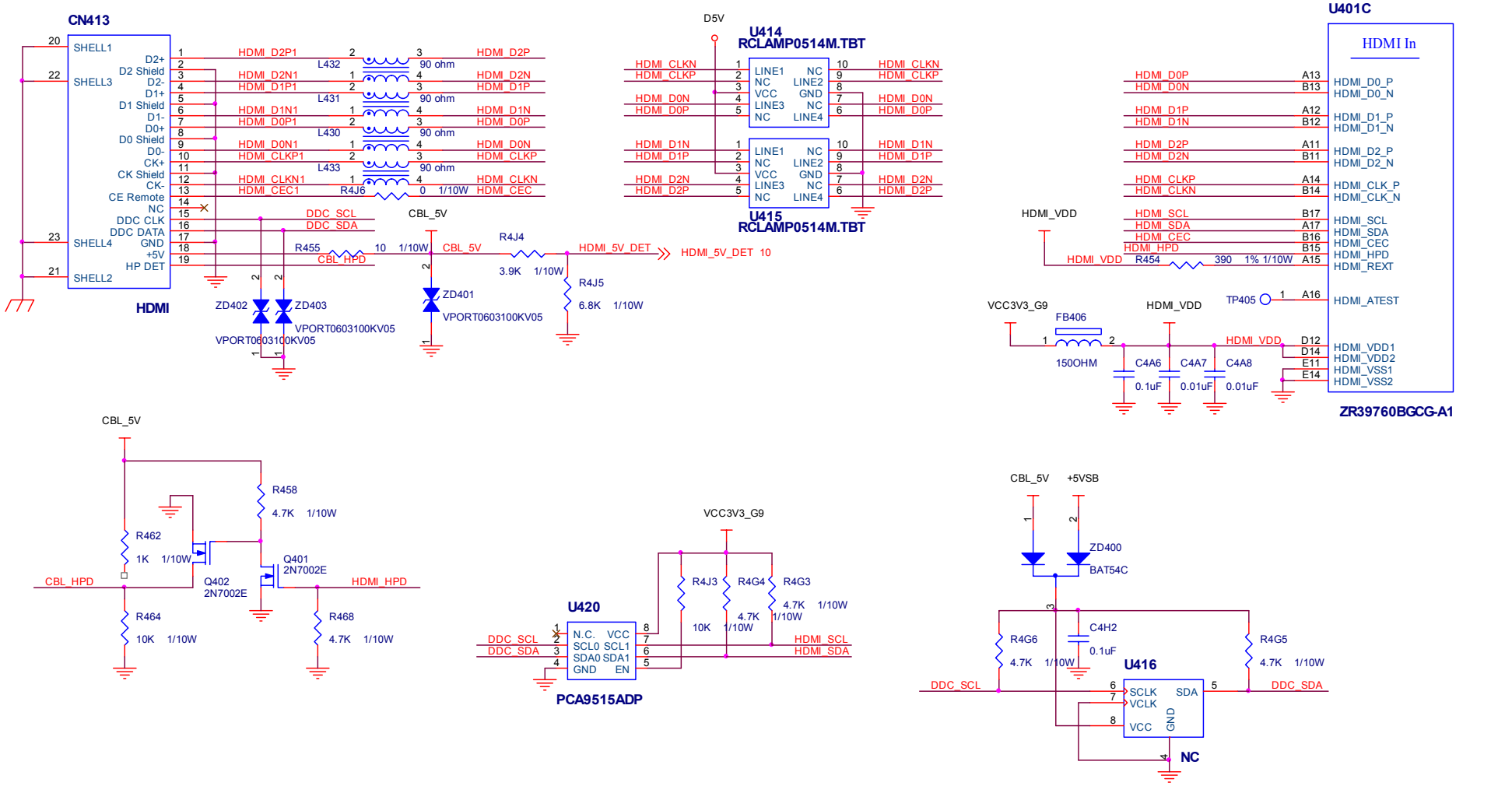

T P V (Top Victory Electronics Co., Ltd.)		OEM MODEL	HLCD-32ZT4	Size	Custom
結 隔 瓜 絹 腹	715T2486_2	TPV MODEL		Rev	H
Key Component	04-HDMI I/F	PCB NAME	715T2486	称爹	<称爹>
Date	Friday, August 10, 2007	Sheet	4 of 15		

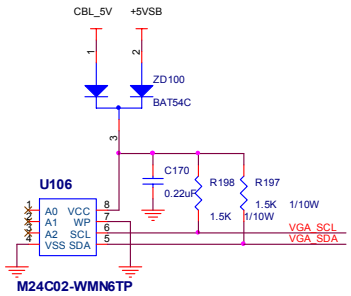

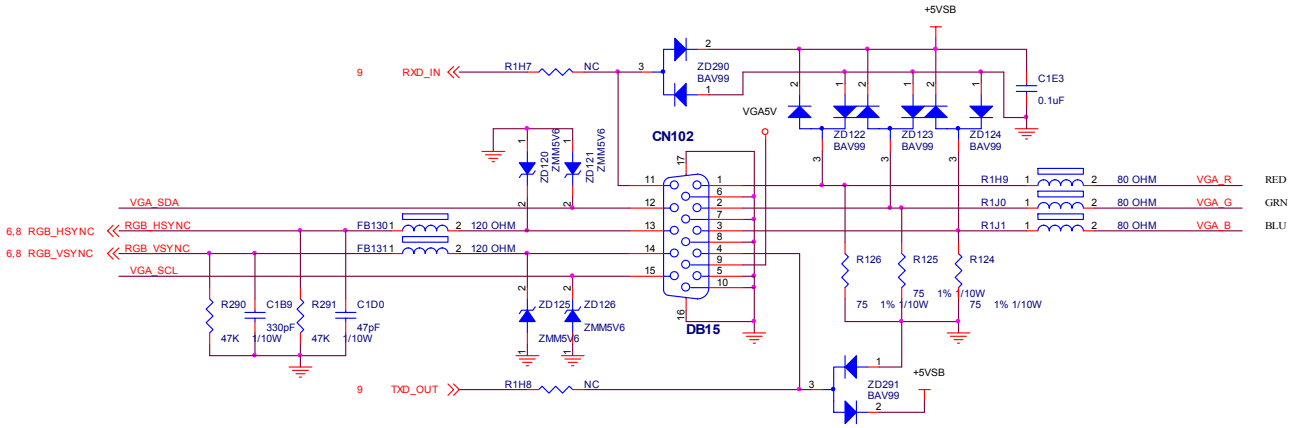

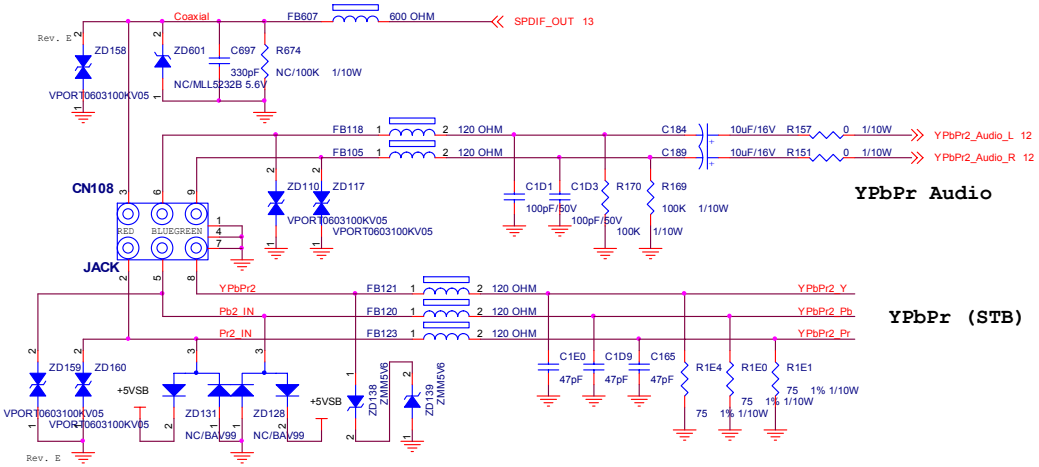

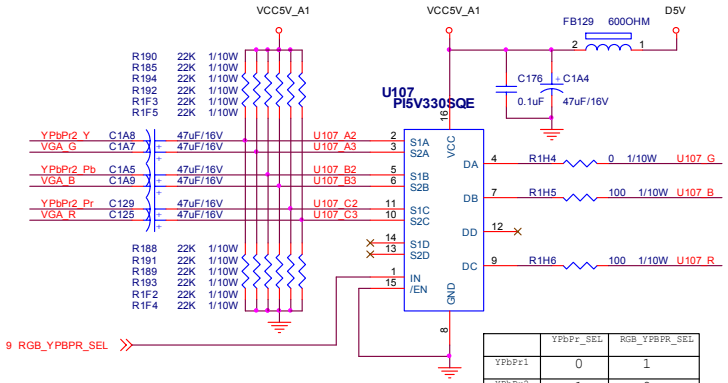

	YPbPr_SEL	RGB_YPBPR_SEL
YPbPr1	0	1
YPbPr2	1	0
VGA	1	1

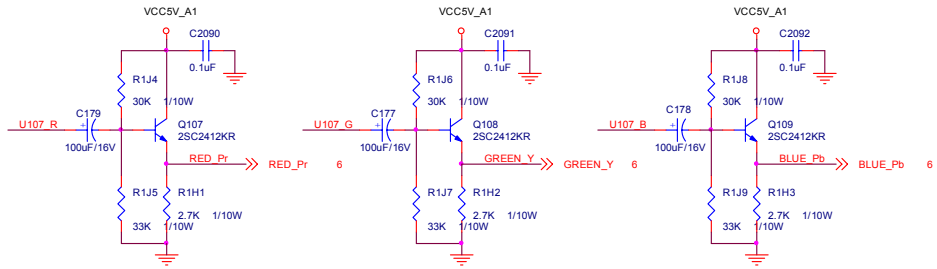

T P V (Top Victory Electronics Co . , Ltd.)		OEM MODEL	HLCD-32ZT4	Size	Custom
話 隔 瓜 鍋 腹	715T2486_2	TPV MODEL		Rev	H
Key Component	05-YPbPr/RGB Input	PCB NAME	715T2486	称 多	<称多>
Date	Friday, August 10, 2007	Sheet	5 of 15		

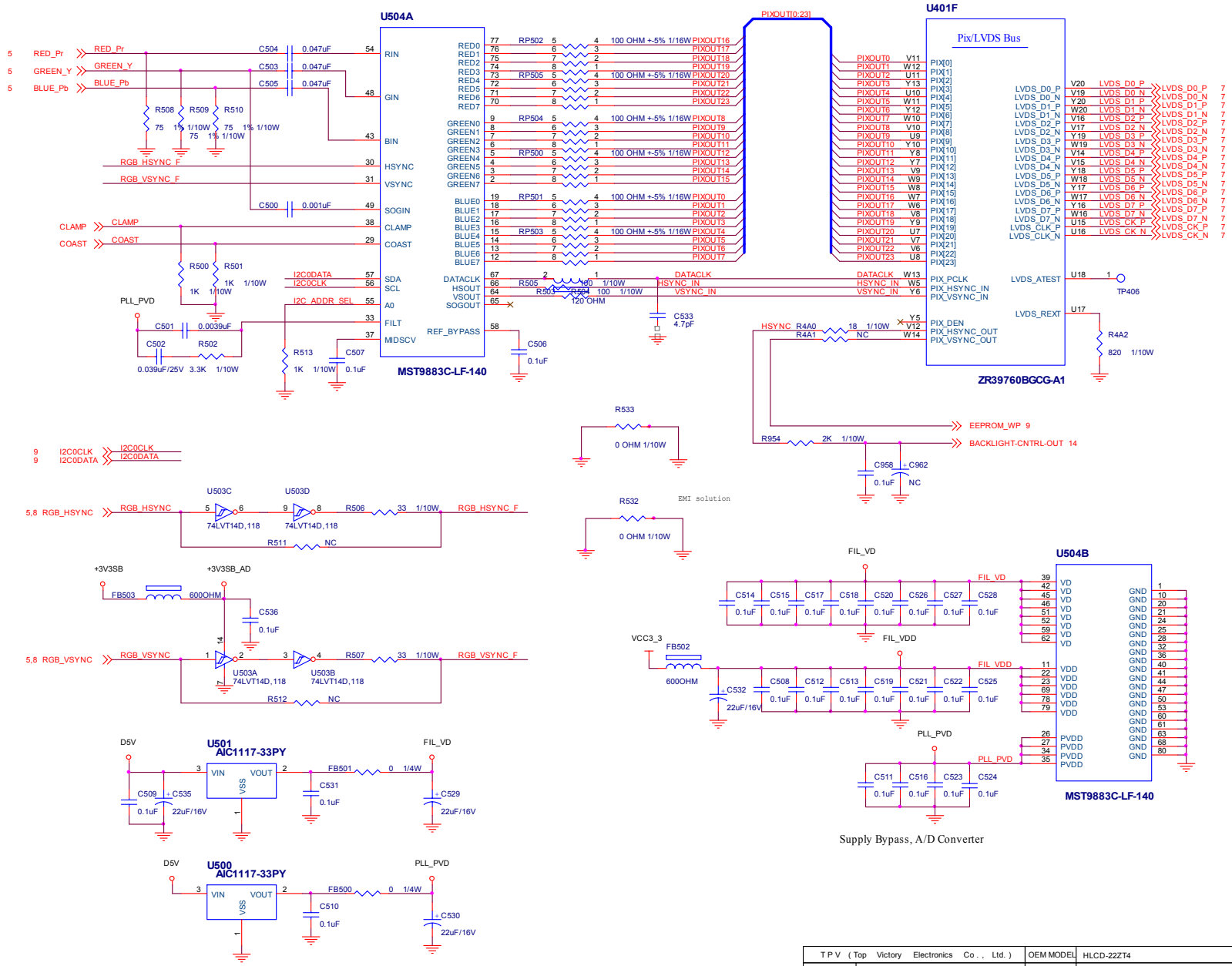

TPV (Top Victory Electronics Co., Ltd.)		OEM MODEL	HLCD-22ZT4	Size	Custom
絬隔瓜鋼腹	715T2486 2	TPV MODEL		Rev	H
Key Component	06-MST9883	PCB NAME	715T2486	称爹	<称爹>
Date	Friday, August 10, 2007	Sheet	6 of 15		

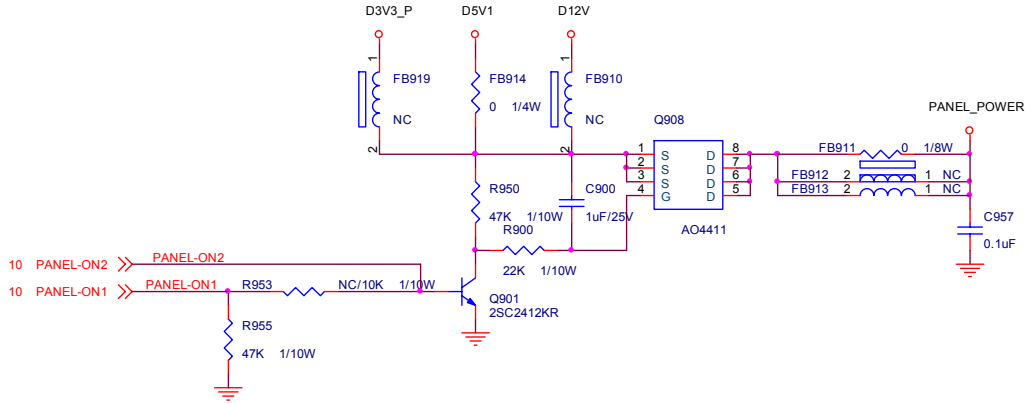

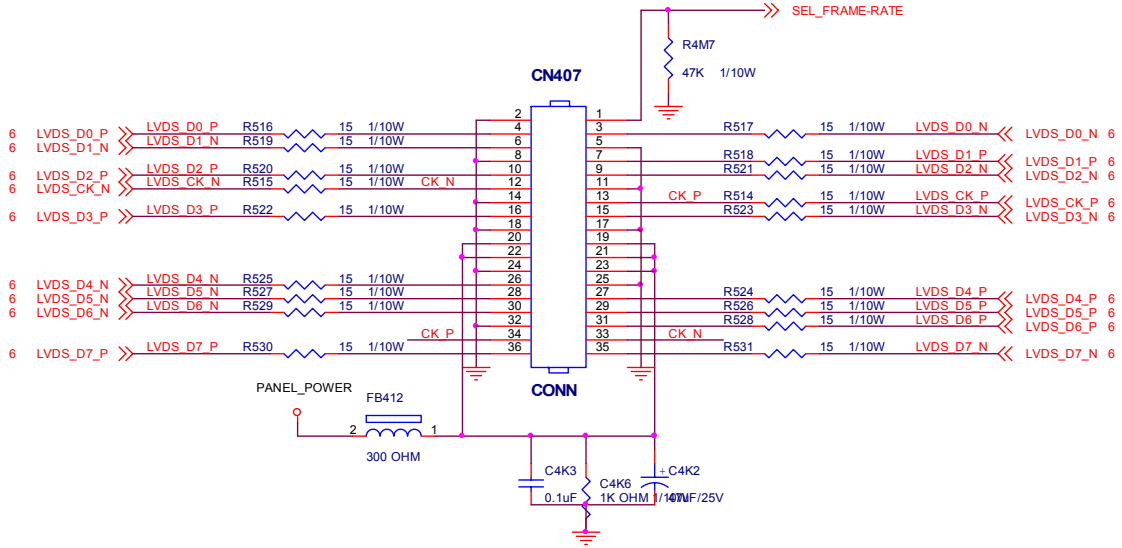

T P V (Top Victory Electronics Co . , Ltd.)		OEM MODEL	HCLD-32ZT4	Size	Custom
結 隔 瓜 細 腹	715T2486 2	TPV MODEL		Rev	H
Key Component	07-LVDS I/F	PCB NAME	715T2486	称爹	<称爹>
Date	Friday, August 10, 2007	Sheet	7 of 15		

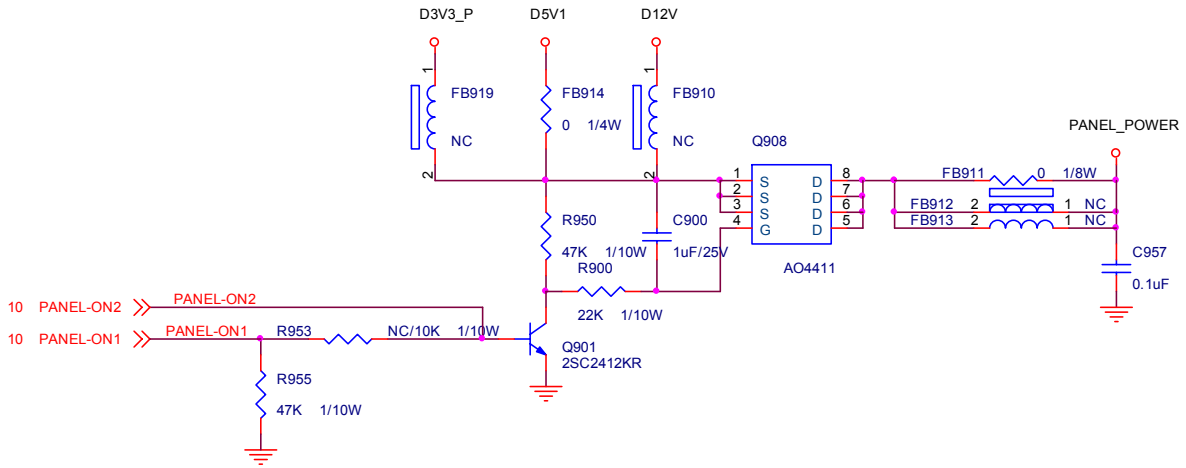
D3V3_P
D5V1
D12V
FB919
NC
FB914
0 1/4W
FB910
NC
Q908
PANEL_POWER
FB911 0 1/8W
FB912 2 1 NC
FB913 2 1 NC
R950
47K 1/10W
R900
22K 1/10W
C900
1uF/25V
AO4411
C957
0.1uF
10 PANEL-ON2
10 PANEL-ON1
PANEL-ON2
PANEL-ON1
R953
NC/10K 1/10W
Q901
2SC2412KR
R955
47K 1/10W

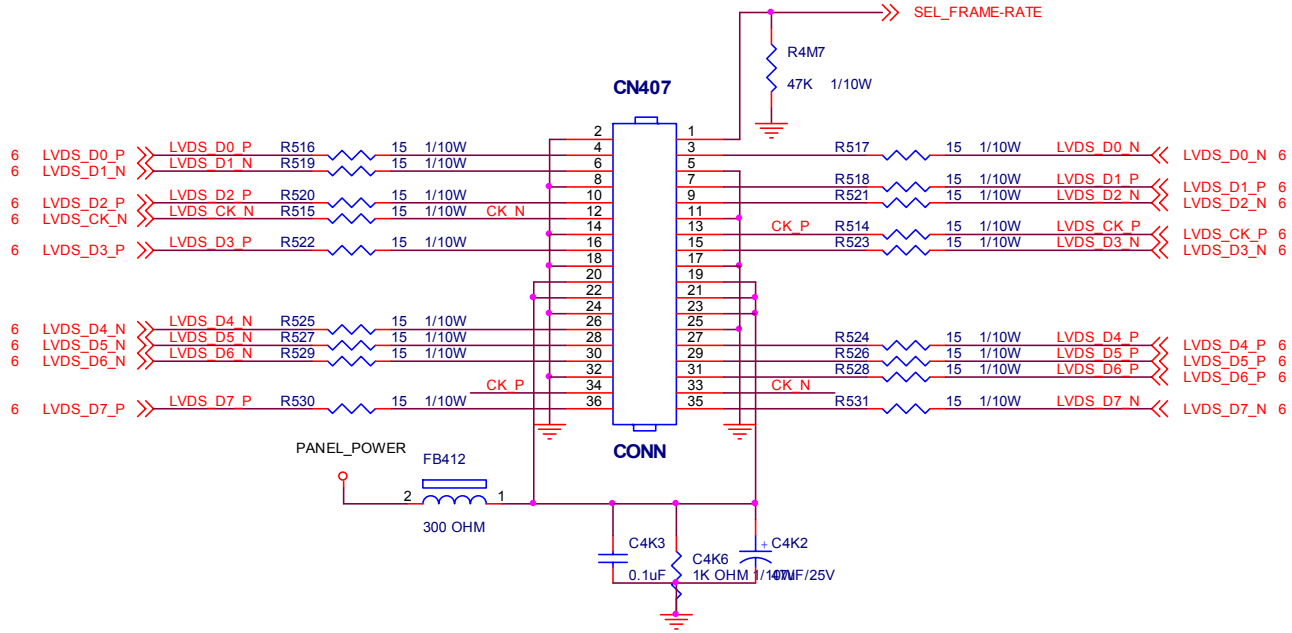
SEL_FRAME-RATE
R4M7
47K 1/10W
CN407
CONN
LVDS_D0_P
LVDS_D1_N
LVDS_D2_P
LVDS_CK_N
LVDS_D3_P
LVDS_D4_N
LVDS_D5_N
LVDS_D6_N
LVDS_D7_P
R516
R519
R520
R515
R522
R525
R527
R529
R530
CK_P
CK_N
R517
R518
R521
R514
R523
R524
R526
R528
R531
LVDS_D0_N
LVDS_D1_P
LVDS_D2_N
LVDS_CK_P
LVDS_D3_N
LVDS_D4_P
LVDS_D5_P
LVDS_D6_P
LVDS_D7_N
15 1/10W
PANEL_POWER
FB412
300 OHM
C4K3
0.1uF
C4K6
1K OHM
C4K2

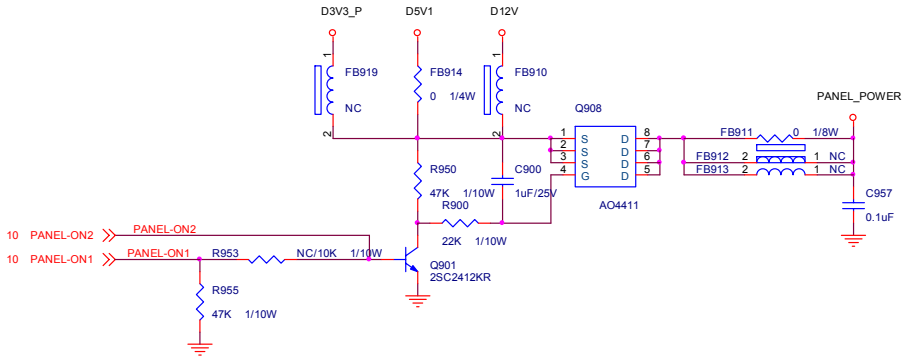

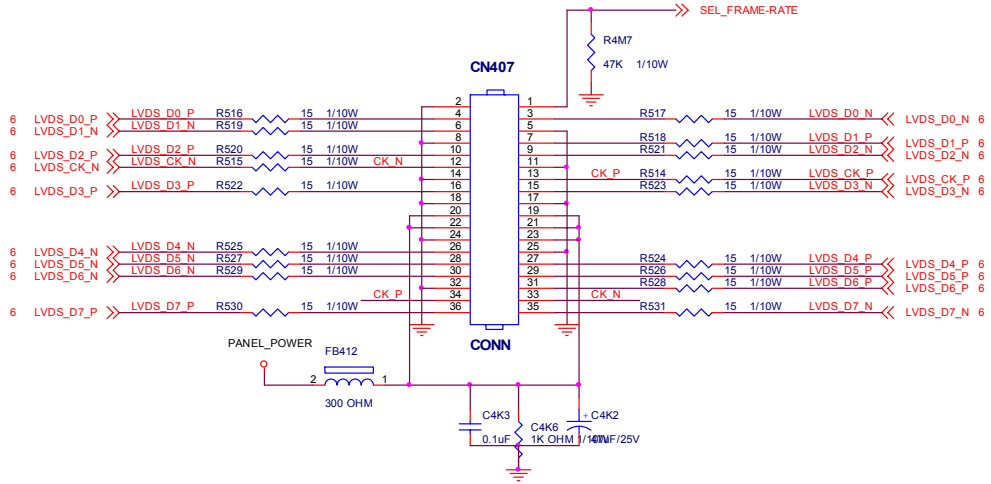

T P V （Top Victory Electronics Co., Ltd.）		OEM MODEL	HCLD-32ZT4	Size	Custom
延 陽 瓜 銅 腹	715T2486 2	TPV MODEL		Rev	H
Key Component	07-LVDS I/F	PCB NAME	715T2486	称爹	<称爹>
Date	Friday, August 10, 2007	Sheet	7 of 15		

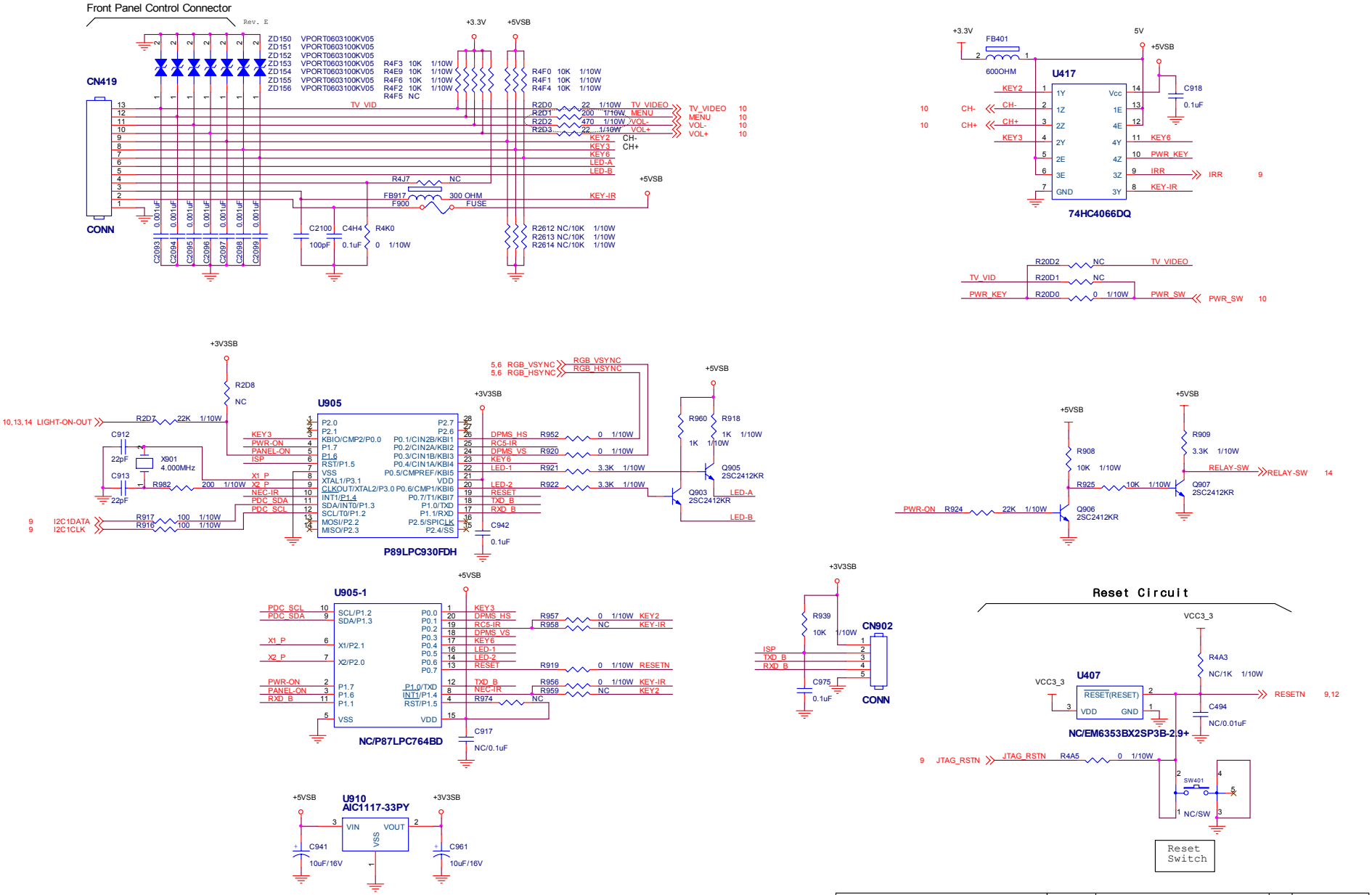

TPV (Top Victory Electronics Co., Ltd.)		OEM MODEL	HCLD-22ZT4	Size	Custom
絬隔瓜絪腹	715T2486 2	TPV MODEL		Rev	H
Key Component	08-Standby MCU and Reset	PCB NAME	715T2486	称爹	<称爹>
Date	Friday, August 10, 2007	Sheet	8 of 15		

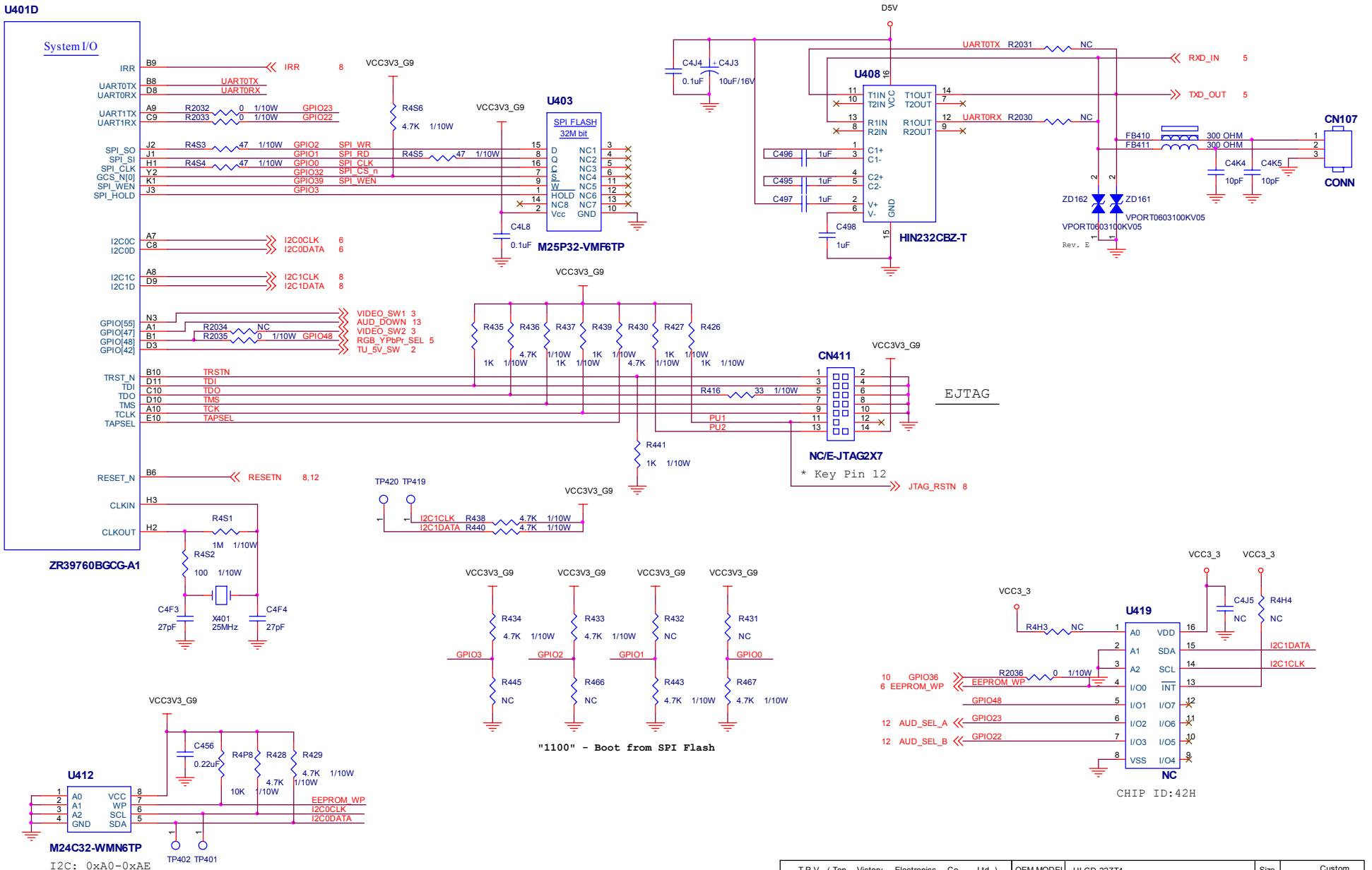

TPV (Top Victory Electronics Co., Ltd.)		OEM MODEL	HLCD-22ZT4	Size	Custom
結 隔 瓜 鋼 股	715T2486 2	TPV MODEL		Rev	H
Key Component	09-SIO I/F	PCB NAME	715T2486	称爹	<称爹>
Date	Friday, August 10, 2007	Sheet	9 of 15		

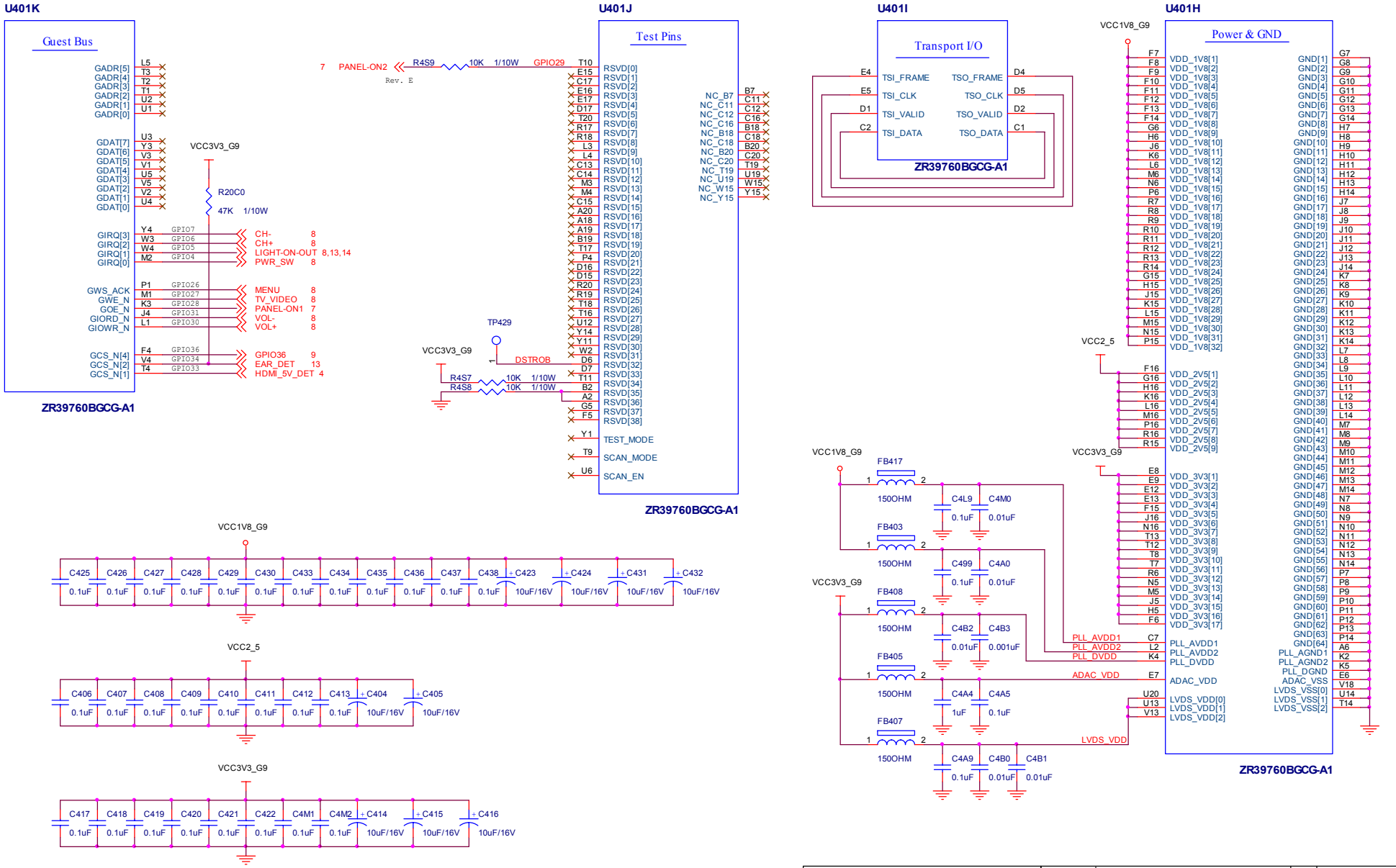

T P V （Top Victory Electronics Co., Ltd.）		OEM MODEL	HLCD-22ZT4	Size	Custom
紙隔瓜絹膜	715T2486 2	TPV MODEL		Rev	H
Key Component	10-GPIO Test Block	PCB NAME	715T2486	称爹	<称爹>
Date	Friday, August 10, 2007	Sheet	10 of 15		

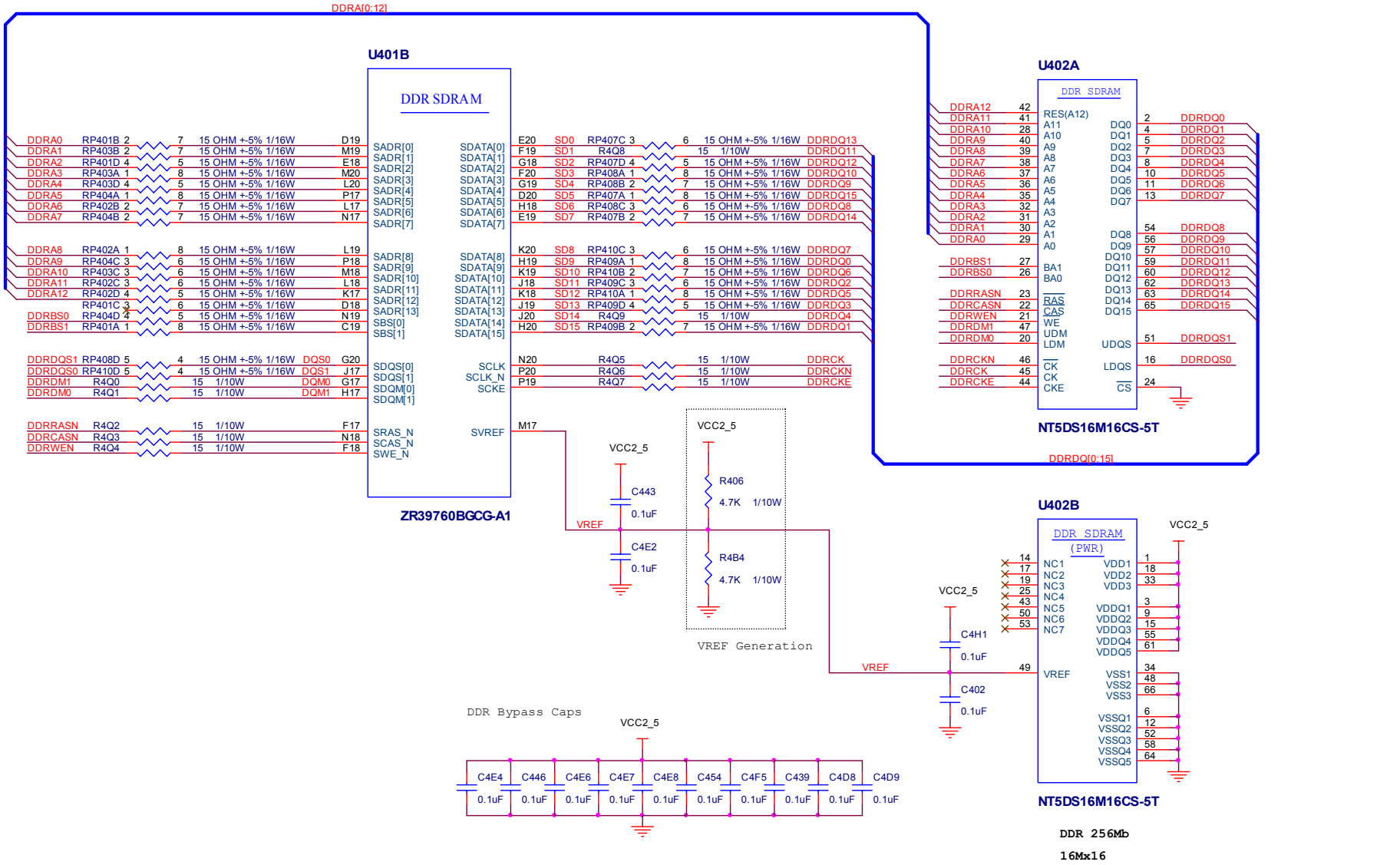

T P V (Top Victory Electronics Co . , Ltd.)		OEM MODEL	HLCD-32ZT4	Size	Custom
紙 隔 瓜 綢 腹	715T2486 2	TPV MODEL		Rev	H
Key Component	11-DDR SDRAM I/F	PCB NAME	715T2486	称爹	<称爹>
Date	Friday, August 10, 2007	Sheet	11 of 15		

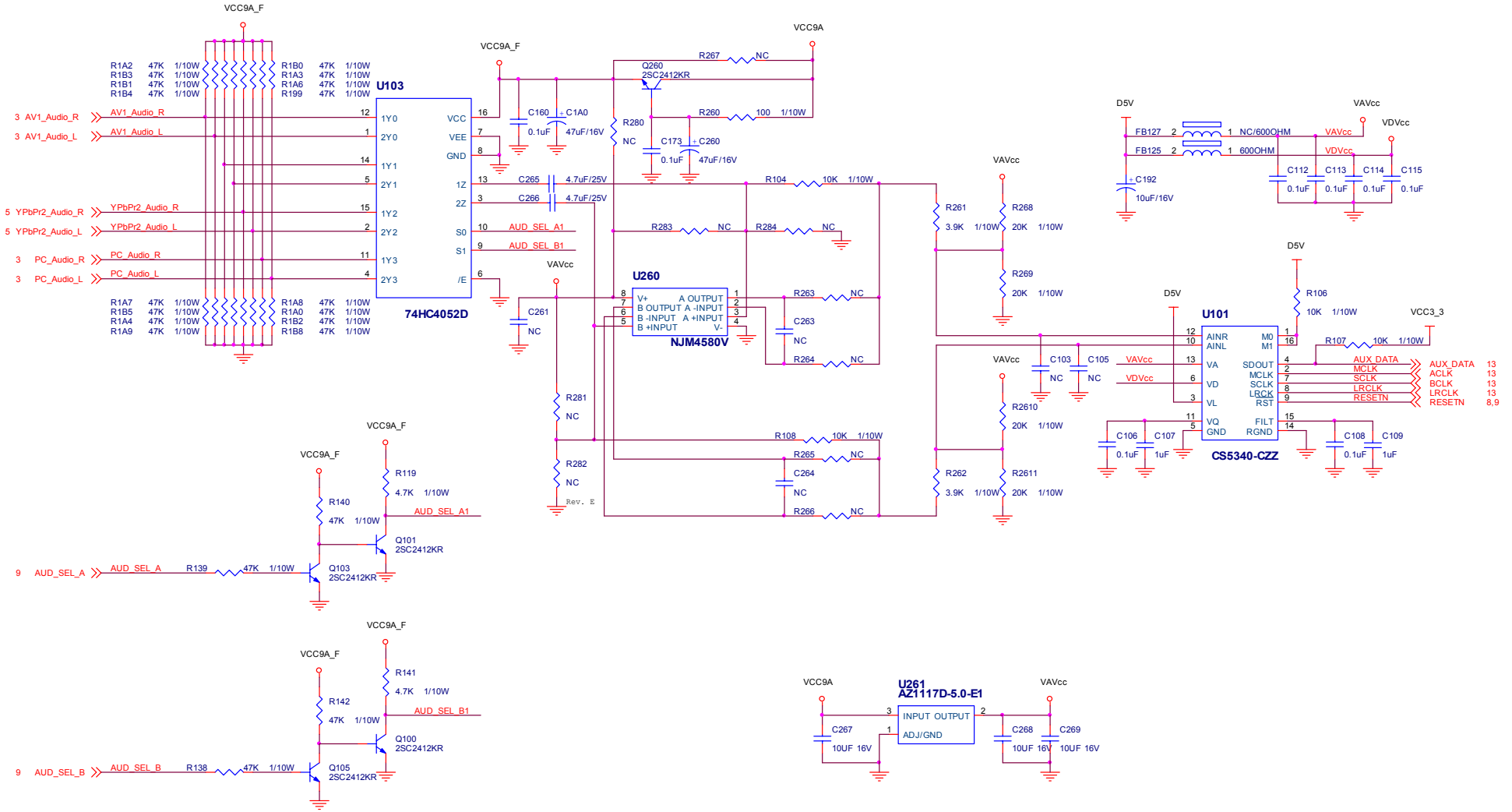

	AUD_SEL_A	AUD_SEL_B
AV1_Audio_R/L	0	0
	1	0
YPbPr2_AUDIO_R/L	0	1
PC_AUDIO_R/L	1	1

T P V (Top Victory Electronics Co., Ltd.)		OEM MODEL	HLCD-22ZT4	Size	Custom
結隔瓜鋼腹	715T2486 2	TPV MODEL		Rev	H
Key Component	12-Audio SW	PCB NAME	715T2486	称爹	<称爹>
Date	Friday, August 10, 2007	Sheet	12 of 15		

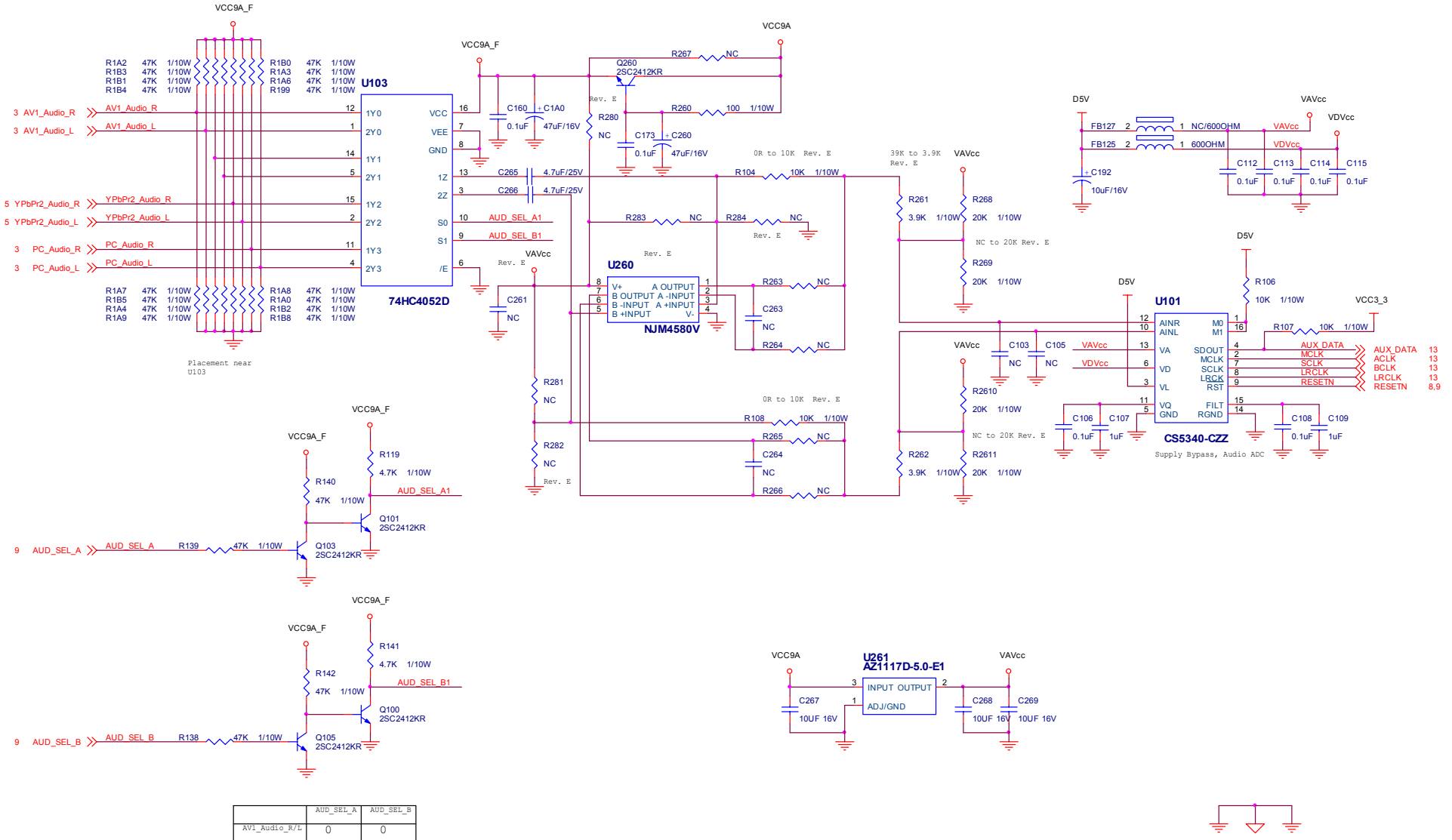

	AUD_SEL_A	AUD_SEL_B
AV1_Audio_R/L	0	0
	1	0
YPbPr2_AUDIO_R/L	0	1
PC_AUDIO_R/L	1	1

T P V (Top Victory Electronics Co . , Ltd.)	OEM MODEL	HCLD-32ZT4	Size Custom
結 陽 瓜 銅 腹 715T2486_2	TPV MODEL		Rev H
Key Component 12-Audio SW	PCB NAME	715T2486	称 爹 <称爹>
Date Friday , August 10, 2007	Sheet	12 of 15	

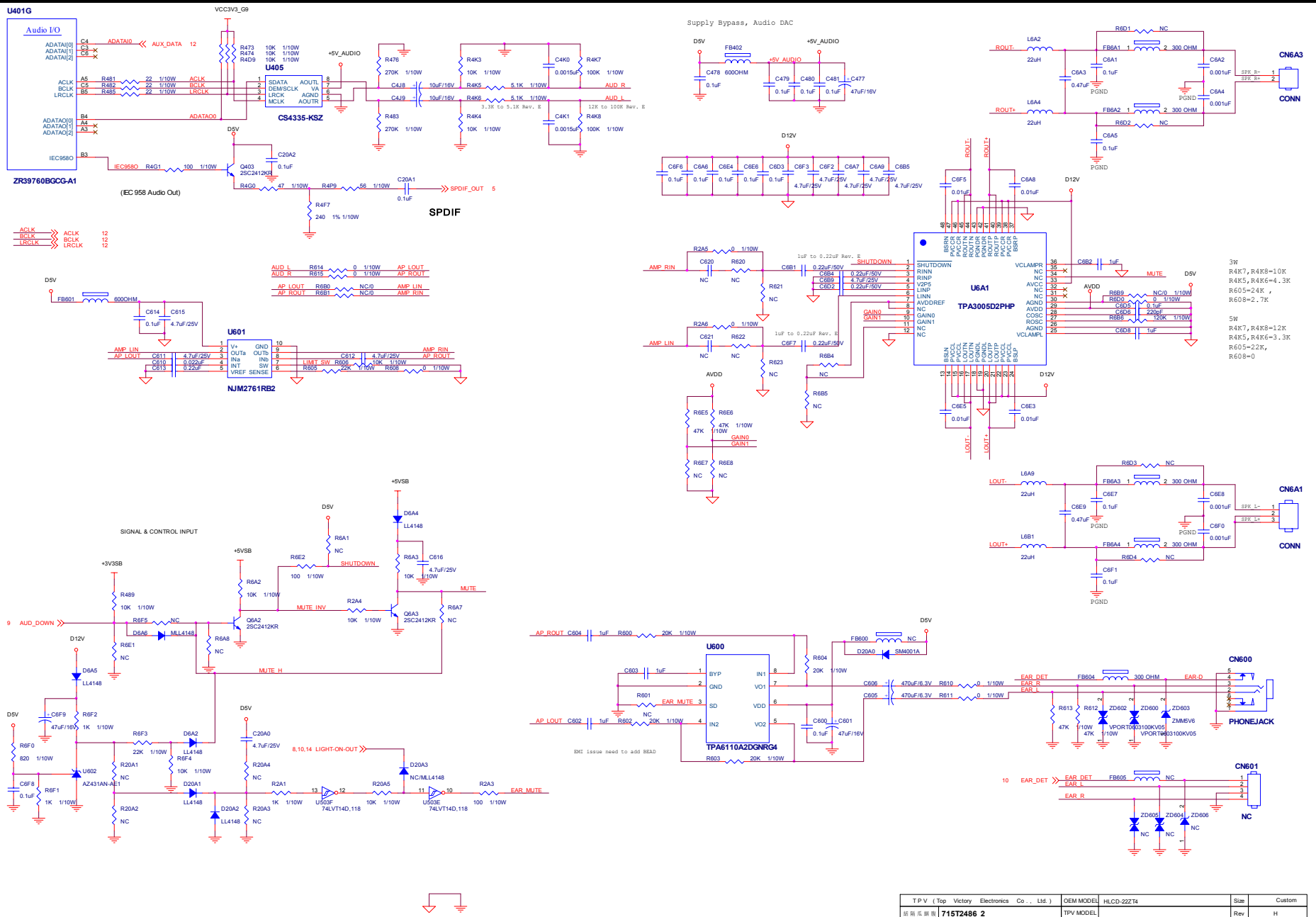

T P V (Top Victory Electronics Co . , Ltd.)		OEM MODEL	HLCD-22ZT4	Size	Custom
結 隔 瓜 顏 腹	715T2486 2	TPV MODEL		Rev	H
Key Component	13-Audio I/F	PCB NAME	715T2486	称 多	<称 多>
Date	Friday, August 10, 2007	Sheet	13 of 15		

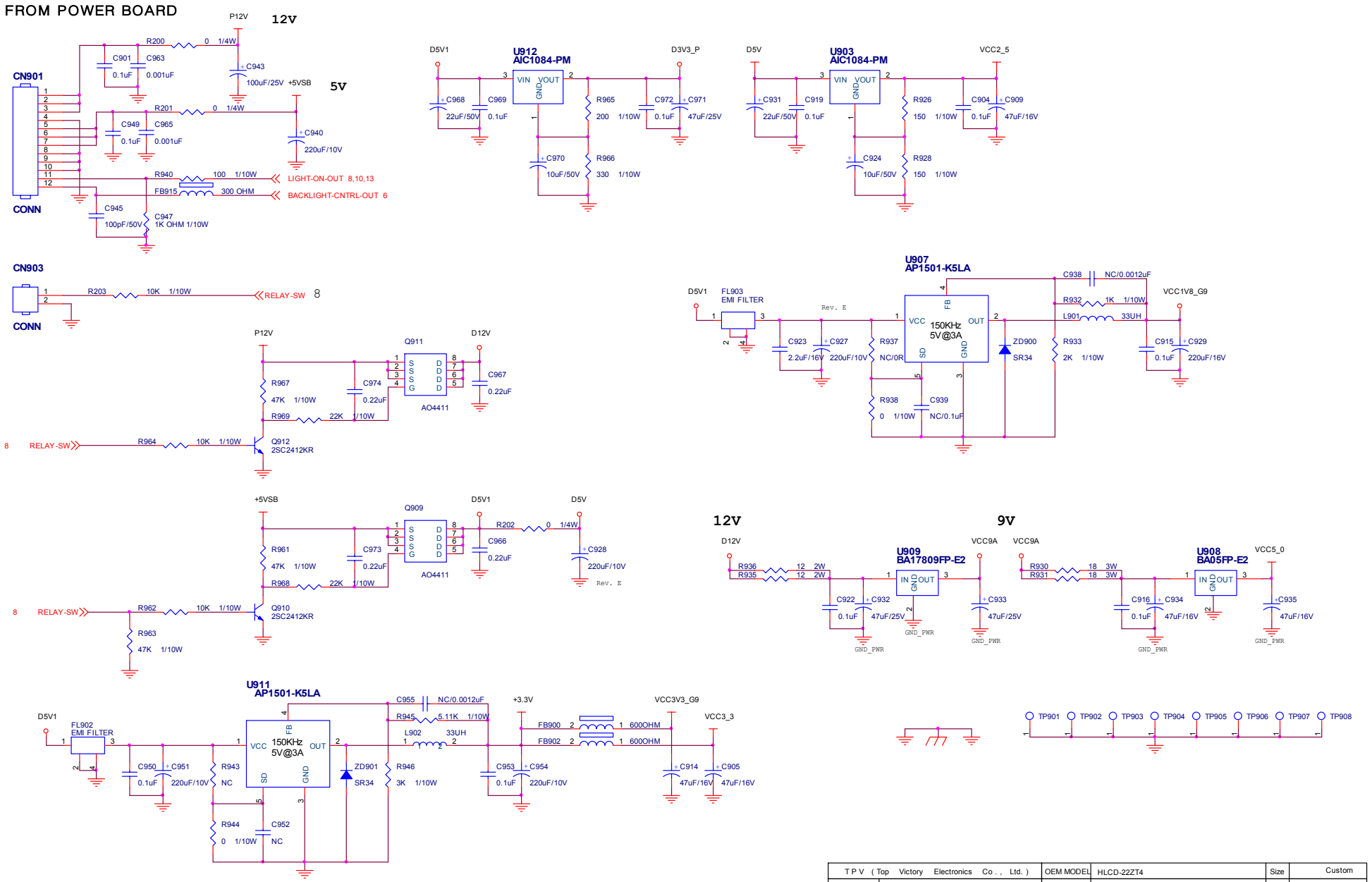

TPV (Top Victory Electronics Co., Ltd.)		OEM MODEL	HLCD-22ZT4	Size	Custom
話隔瓜鋼腹	715T2486 2	TPV MODEL		Rev	H
Key Component	14-Power and Regulator	PCB NAME	715T2486	称爹	<称爹>
Date	Friday, August 10, 2007	Sheet	14 of 15		

9.2 Power Board

715T2463-3

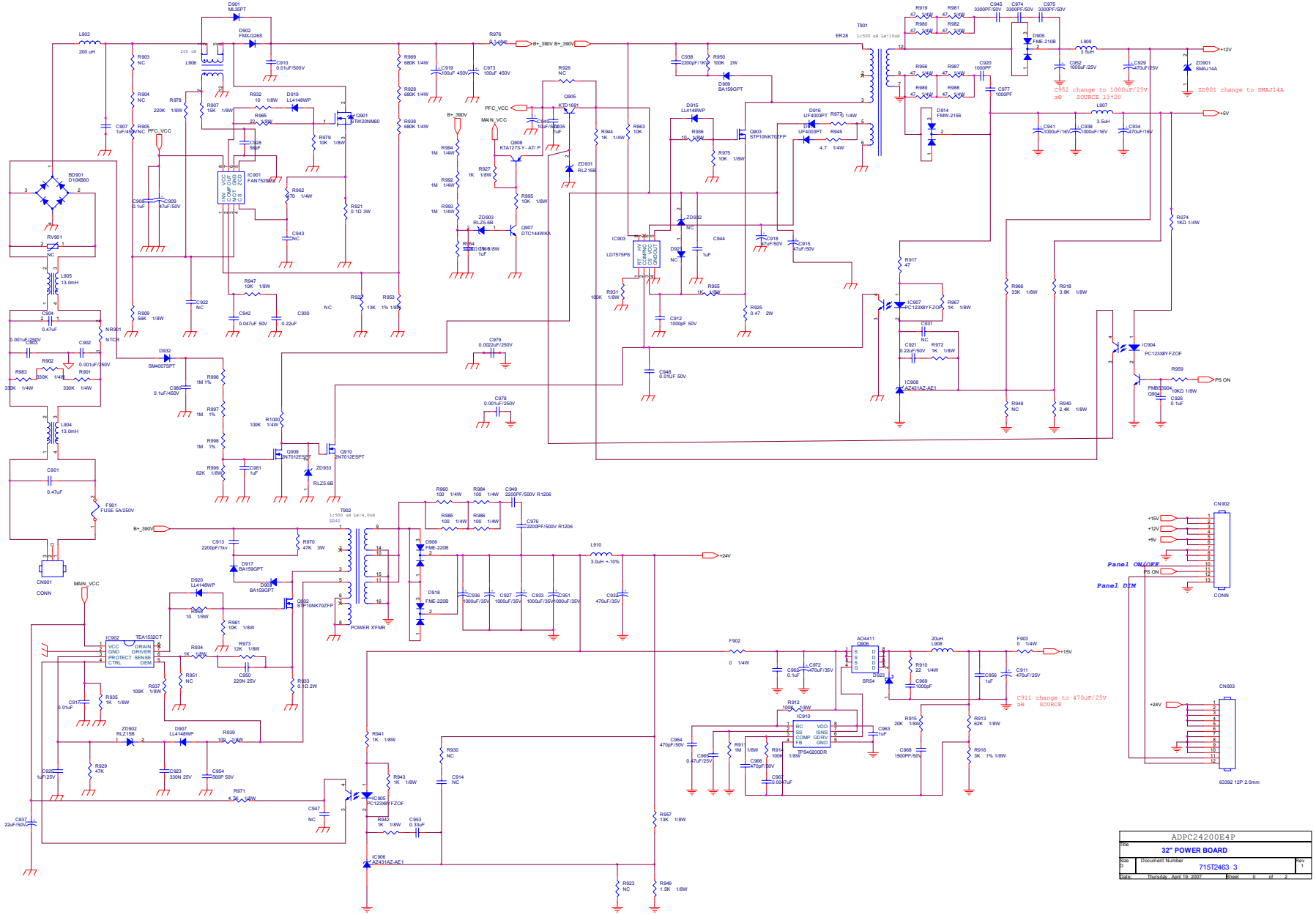

10. Exploded View

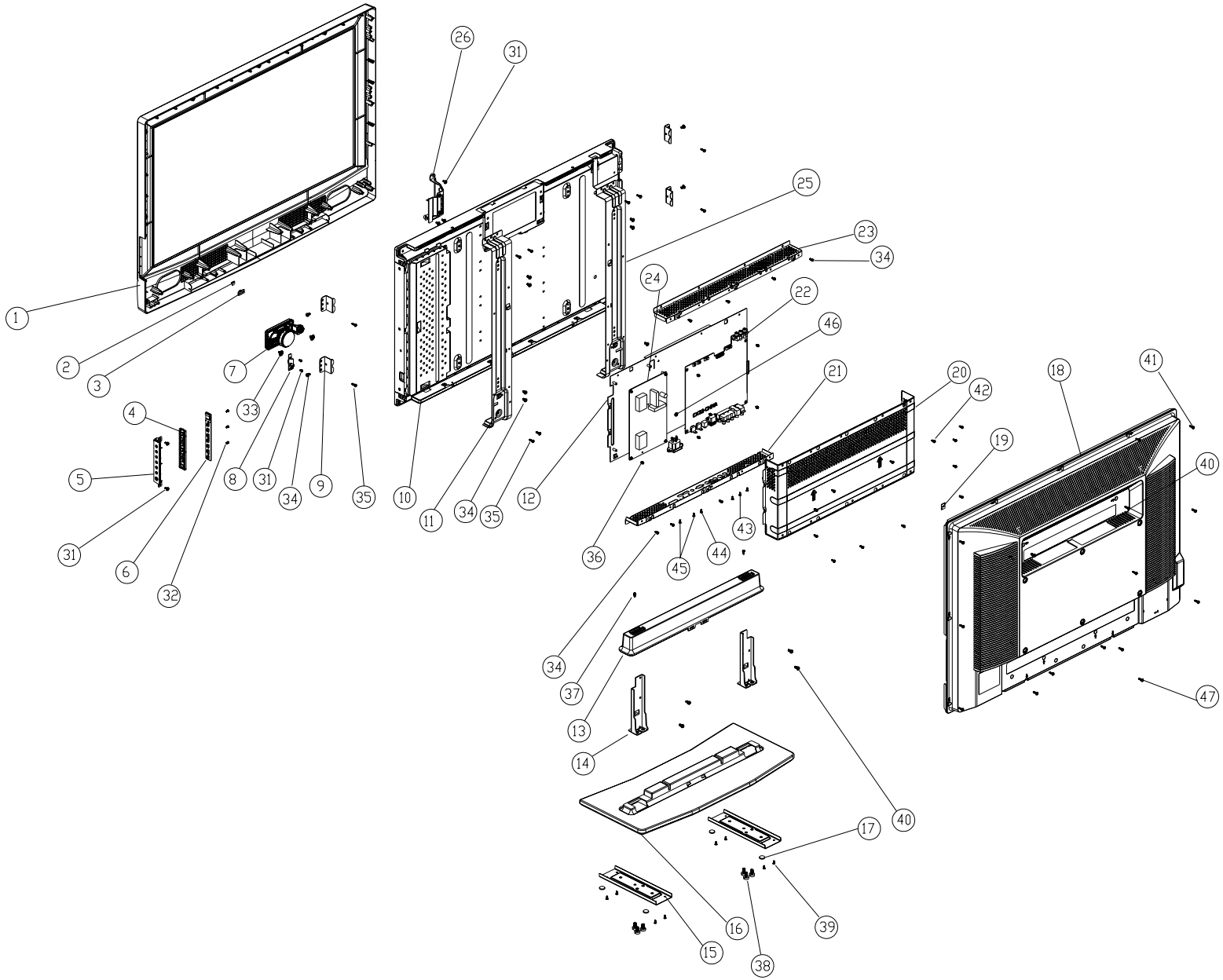

Item	Part No.	Description	Quantity
1	A34T0216 KGJ2L 30	BEZEL TV32W-7A2	1
2	A33T0191 1 1C	LENS_POWER	1
3	A33T0192 ED 1C	LENS_IR	1
4	A33T0139 GM 2L	BUTTON_FUNC	1
5	A33T0138 GMB2L 30	COVER_FUNC	1
6	KEPF7QA9	KEY BOARD	1
7	078T 478 2 K	SPEAKER 8 OHM 10 W 90 X51 mm KUAIDA	2
8	IRPF7QA6	IR BOARD	1
9	Q15T0125 1	BKT-HOLD-PANEL	4
10	750TVUN0W2C11N	PAENL T315XW02 VC01 TW AUO	1
11	Q15T0122 1	PANEL-BKT-L	1
12	Q15T0123B08	PCB BKT (CX32+DE200)	1
13	A34T0218 GM 1L	STAND	1
14	Q15T0126A01	STAND-BKT-L	1
14	Q15T0126A02	STAND-BKT-R	1
15	Q15T0124 1	BASE-BKT	2
16	A34T0219 GM 1L 20	BASE_S1	1
17	Q12T7027 1	RUBBER FOOT	4
18	A34T0217 GM 2AA030	REAR COVER 32	1
19	015T6184 1	KENSINGTON LOCK	1
20	Q85T0041 1	SHIELD	1
21	Q15T0121A13	IO BKT BTM (DE200)	1
22	CBPF7Z4KQ7	MAIN BOARD	1
23	Q15T0120 1	IO BKT TOP (DE200)	1
24	ADPC24200E4P	ADAPTER BOARD	1
25	Q15T0122 2	PANEL-BKT-R	1
26	Q33T0128 GM 1A	SIDE COVER	1
31	0Q1T1030 8120	SCREW	5
32	0Q1T 930 6120	SCREW	9
33	001T6021 1	SCREW	4
34	0M1T 940 6120	SCREW	22
35	0Q1T 940 12120	SCREW	12
36	0M1T1730 6120	SCREW 3*6MM	8
37	0M1T 930 6120	SCREW M3-0.5X6	2
38	0M1T6022500	SCREW	6
39	0Q1T 130 8120	SCREW	8
40	0M1T 940 8 47 CR3	SCREW	6
41	0Q1T 940 12 47 CR3	T4X12 SCREW	13
42	0M1T 930 4120	SCREW	10
43	0M1T1730 10120	SCREW	5
44	0D1T 930 6120	SCREW	1
45	0M1T 130 6 47 CR3	SCREW	2
46	0M1T1740 6120	SCREW	1
47	0M1T 960 8 47 CR3	SCREW	2

11. BOM List

E327AZNSBWH2NN

Location	Part No.	Description
	001T6021 1	SCREW
	007T 5 L 16	COMPOUND PALLET
	007T 7 T 7	COMPOUND PALLET
	026T 800504 3	BARCODE LABEL
	040T 581 26704	SHIPPING LABEL
	044T6000 4 6B	SPACE PAPER
	044T6002615 1A	PAPER BOARD
	044T6002615 3A	PAPER BOARD
	044T9003220	CORNER PAPER
	045T 77 3	PE PACKING
	049T 51 1A	ERADICATOR
	052T 1185	MIDDLE TAPE FOR CARTON
	052T 1186	SMALL TAPE
	052T 1211 A	ADHESIVE TYPE
	052T 1211 B	ADHESIVE TYPE
	052T 2191 A	TAPE
	052T6019 1	YELLOW TAPE
	078T 478 2 KL	SPEAKER 8 OHM 10 W 90 X51 MM KUAIDA
	078T 478 2 KR	SPEAKER 8 OHM 10 W 90 X51 MM KUAIDA
E08904	089T 17356C554	AUDIO CABLE
	089T 725HAA DB	D-SUB
	089T408A18N IS	POWER CORD WALL-OUT FOR ITALY
	092TB1JX1A21GM	BATTERY LR06 XINLI
	095T8013 2D555	WIRE HARNESS TKP2-P2 600MM
	095T8013 3D562	WIRE HARNESS TKP2-P2 550MM
	095T801413D649	WIRE HARNESS 13P-8P(650MM)+5P(450MM)
	095T801414DH22	WIRE HARNESS 14P 200MM
	095T801836D 3	HARNESS 30P-36P 300MM
	098TRABDINEHDF	REMOTE CONTROL FOR HYUNDAI
	0D1T 930 6120	SCREW
	0M1T 930 4120	SCREW
	0M1T 940 6120	SCREW
	0M1T 940 6120	SCREW
	0M1T 940 6120	SCREW
	0M1T 940 8 47 CR3	SCREW
	0M1T 940 8 47 CR3	SCREW
	0M1T 960 8 47 CR3	SCREW
	0M1T1730 6120	SCREW 3*6MM
	0M1T1730 6120	SCREW 3*6MM

	0M1T1740 6120	SCREW
	0Q1T 930 6120	SCREW
	0Q1T 930 6120	SCREW
	0Q1T 930 6120	SCREW
	0Q1T 940 12 47 CR3	T4X12 SCREW
	0Q1T 940 12120	SCREW
	0Q1T1030 8120	SCREW
	0Q1T1030 8120	SCREW
	705TQ715060	BRACKET ASS'Y
	002T6008 1	SCREW
E089	089T 183502 W	RS 232 CABLE 170MM
	0M1T 130 6 47 CR3	SCREW
	Q15T0121A13	IO BKT BTM(DE200)
	705TQ734169	STAND ASS'Y
	0M1T 930 6120	SCREW M3-0.5X6
	0Q1T 130 8120	SCREW
	A34T0218 GM 1L	STAND
	A34T0219 GM 1L 20	BASE_S1
	Q12T7027 1	RUBBER FOOT
	Q15T0124 1	BASE-BKT
	Q15T0126A01	STAND-BKT-L
	Q15T0126A02	STAND-BKT-R
	705TQ734410	BEZEL ASS'Y
	052T6022 27 GP	BLUE TAPE
	A33T0191 1 1C	LENS_POWER
	A33T0192 ED 1C	LENS_IR
	A34T0216 KGJ2L 30	BEZEL TV32W-7A2
	705TQ734411	REAR COVER ASS'Y
	A33T0138 GMB2L 30	COVER_FUNC
	A33T0139 GM 2L	BUTTON_FUNC
	A34T0217 GM 2AA030	REAR COVER 32
	Q33T0128 GM 1A	SIDE COVER
	Q36T 600 36 9	CLOTH_GRIDDING
	Q36T 600 37 18	CLOTH_GRIDDING
	Q36T 600 37 23	CLOTH_GRIDDING
	Q36T 600 43 1	HIMERON
	Q44T3121510518	SPONE
	Q44T3121510526	PU FOAM
	Q44T3121510528	PU FOAM
	705TQ787008	AC SOCKET ASS'Y
	087T 501 7 RF GP	AC SOCKET
	095T 900 42	WIRE HARNESS

	095T8021 3D552	WIRE HARNESS
	096T 29 6	SHRINK TUBE UL/CSA
	750TVUN0W2C11N	PAENL T315XW02 VC01 TW AUO
	ADPC24200E4P	ADAPTER BOARD
CN903	033T380212B Y	CONNECTOR
CN901	033T8029 3A	WAFER 2P 3.96MM
	040T 45762412B	CBPC LABEL
	051T 6 4503	RTV
IC904	056T 139 3B	IC PC123Y82FZ0F
IC905	056T 139 3B	IC PC123Y82FZ0F
IC907	056T 139 3B	IC PC123Y82FZ0F
R950	061T152M104 64	100K0HM2W
C901	063T107K474 US	X2 CAP 0.47UF K 275VAC
C904	063T107K474 US	X2 CAP 0.47UF K 275VAC
C913	065T 2K222 1A6921	CAP CER 2200PF K 2KV
C938	065T 2K222 1A6921	CAP CER 2200PF K 2KV
C978	065T306M1022BM	Y1.CAP.001UF 250VAC MURATA
C902	065T306M1022BP	Y1.CAP.001UF 250VAC
C903	065T306M1022BP	Y1.CAP.001UF 250VAC
C979	065T306M2222BP	Y1.CAP.0022UF 250V AC
C910	065T517K103 2B6921	10000PF K Z5P 500V
C973	067T 40Y10115K	CAP 105℃ 100UF M 450V
C919	067T 40Y10115K	CAP 105℃ 100UF M 450V
C929	067T215D4714KV	EC 105℃ CAP 470UF M 25V
C952	067T215S1024KV	EC 105℃ CAP 1000UF M 25V
C941	067T215S1024KV	EC 105℃ CAP 1000UF M 25V
C934	067T215S4713KV	EC 105℃ CAP 470UF M 16V
C932	067T215S4716KV	CAP 105℃ 470UF M 35V
C939	067T215V102 4R	CAP 105℃ 1000UF M 25V
C933	067T215V102 6N	CAP 105℃ 1000UF M 35V
C951	067T215V102 6N	CAP 105℃ 1000UF M 35V
C927	067T215V102 6N	CAP 105℃ 1000UF M 35V
C936	067T215V102 6N	CAP 105℃ 1000UF M 35V
C972	067T215V471 6N	EC L105℃ 470UF M 35V NCC
C911	067T215V471 6N	EC L105℃ 470UF M 35V NCC
L903	073L 253156 LH	CHOKE COIL
L906	073T 174 98 DN	PFC CHOKE 200UH LK.PD017.AG0
L905	073T 174106 DN	LINE FILTER 13MH LK.TF032.A20
L904	073T 174106 DN	LINE FILTER 13MH LK.TF032.A20
L907	073T 253 91 LS	CHOKE BY LI SHIN
L909	073T 253 91 LS	CHOKE BY LI SHIN
L910	073T 253150 L	CHOCK

L908	073T 253194 L	CHOKE COIL 20UH CC-008064
T902	080TL24T 7 DN	X'FMR 500UH LK.PF004.H00
T901	080TL24T 8 L	X'FMR 500UH PT-007539
CN902	095T 82512D507	WIRE HARNESS 12P-12P(SCN) 120MM
	705TQ767008	C911/C907 ASS'Y
Q905	057T 761 7	KTD1691P
RV901	061T 46 17	VARISTOR 560V TNR14V561K
R976	061T 30310852T GP	0.1 OHM 1W FUSE RESISTOR
C907	063T213J105GFC	CAP MPE 1UF J 450V
D917	093T1100 1052T	BA159GPT
D903	093T1100 1052T	BA159GPT
	705TQ793009	D906/D918 ASS'Y
	051T 200 1	OIL FOR DISAPPEAR
D906	093T 60258	FME-220B TO-220 SANKEN
D918	093T 60258	FME-220B TO-220 SANKEN
	0M1T1730 10120	SCREW
	Q90T0137101	HEAT SINK
	705TQEK0 57001	Q901/Q902/D902 ASS'Y
	051T 200 1	OIL FOR DISAPPEAR
Q902	057T 667 21	STP10NK70ZFP
Q901	057T 667 25	STW20NM60
D902	093T 220 23	DIODE FMX-G26S TO-220 SANKEN
	0M1T1730 10120	SCREW
	Q12T 372 8	SILICON
	705TQEK0 61001	R921 ASS'Y
R921	061T153M10858F	RST MOFR 0.1 OHM +-5% 3WS
	096T 29 8	TUBE
	705TQEK0 61002	R933 ASS'Y
R933	061T152M10858F	RST MOFR 0.1 OHM +-5% 2WS
	096T 29 6	SHRINK TUBE UL/CSA
	705TQEK0 61003	R970 ASS'Y
R970	061T153M47358F	47K OHM 5% 3W
	096T 29 8	TUBE
	705TQEK0 61010	R925 ASS'Y
R925	061T152M478 64	0.47 OHM 2W
	096T 29 6	SHRINK TUBE UL/CSA
	705TQEK0 61012	NR901 ASS'Y
NR901	061T 58050 WL GP	RST NTCR 5 OHM +-15% 5A 13MM THINKING
	Q09T 203 8	PIN
	705TQEK0 93001	BD901/Q903 ASS'Y
	051T 200 1	OIL FOR DISAPPEAR
Q903	057T 667 21	STP10NK70ZFP

BD901	093T 50460 18	D10XB60
	0M1T1730 8120	SCREW
	0M1T1730 10128 GP	SCREW
	Q90T0106 1	HEAT SINK
	705TQEK0 93004	D914/D905 ASS'Y
	051T 200 1	OIL FOR DISAPPEAR
D905	093T 60239	FME-210B T0-220
D914	093T1506 2	FMW-2156
	0M1T1730 8120	SCREW
	Q90T0125 1 A	HEAT SINK
IC901	056T 368 12	IC FAN7529MX SOP-8
IC903	056T 379 61	IC LD7575PS SOP-8 LEADTREND
IC910	056T 379 84	IC TPS40200DR SOIC-8
IC902	056T 564911 1	IC TEA1532CT SO-8
Q904	057T 417 4	CHIP PMBS3904 BY PHILIPS
Q907	057T 760 5	DTC144WKA BY FOHM SMT
Q906	057T 763 3	AO4411L SO-8 BY AOS SMT
R958	061T0805100	RST CHIPR 10 OHM +-5% 1/8W
R936	061T0805100	RST CHIPR 10 OHM +-5% 1/8W
R932	061T0805100	RST CHIPR 10 OHM +-5% 1/8W
R931	061T0805100 3F	RST CHIPR 100 KOHM +-1% 1/8W
R954	061T0805100 3F	RST CHIPR 100 KOHM +-1% 1/8W
R939	061T0805101	RST CHIPR 100 OHM +-5% 1/8W
R972	061T0805102	RST CHIPR 1KOHM +-5% 1/4W
R967	061T0805102	RST CHIPR 1KOHM +-5% 1/4W
R955	061T0805102	RST CHIPR 1KOHM +-5% 1/4W
R943	061T0805102	RST CHIPR 1KOHM +-5% 1/4W
R942	061T0805102	RST CHIPR 1KOHM +-5% 1/4W
R941	061T0805102	RST CHIPR 1KOHM +-5% 1/4W
R935	061T0805102	RST CHIPR 1KOHM +-5% 1/4W
R934	061T0805102	RST CHIPR 1KOHM +-5% 1/4W
R927	061T0805102	RST CHIPR 1KOHM +-5% 1/4W
R947	061T0805103	RST CHIPR 10 KOHM +-5% 1/8W
R959	061T0805103	RST CHIPR 10 KOHM +-5% 1/8W
R961	061T0805103	RST CHIPR 10 KOHM +-5% 1/8W
R975	061T0805103	RST CHIPR 10 KOHM +-5% 1/8W
R979	061T0805103	RST CHIPR 10 KOHM +-5% 1/8W
R995	061T0805103	RST CHIPR 10 KOHM +-5% 1/8W
R912	061T0805104	RST CHIPR 100 KOHM +-5% 1/8W
R914	061T0805104	RST CHIPR 100 KOHM +-5% 1/8W
R937	061T0805104	RST CHIPR 100 KOHM +-5% 1/8W
R911	061T0805105	RST CHIPR 1 MOHM +-5% 1/8W

R973	061T0805123	RST CHIPR 12 KOHM +-5% 1/8W
R957	061T0805130 2F	RST CHIPR 13KOHM +-1% 1/8W
R953	061T0805130 2F	RST CHIPR 13KOHM +-1% 1/8W
R949	061T0805150 1F	RST CHIPR 1.5 KOHM +-1% 1/8W
R907	061T0805150 2F	RST CHIPR 15 KOHM +-1% 1/8W
R915	061T0805203	RST CHIPR 20 KOHM +-5% 1/8W
R965	061T0805220	RST CHIPR 22 OHM +-5% 1/8W
R978	061T0805224	RST CHIPR 220 KOHM +-5% 1/8W
R940	061T0805240 1F	RST CHIPR 2.4 KOHM +-1% 1/8W
R916	061T0805300 1F	RST CHIPR 3 KOHM +-1% 1/8W
R966	061T0805330 2F	RST CHIPR 33 KOHM +-1% 1/8W
R918	061T0805390 1F	RST CHIPR 3.9KOHM +-1% 1/8W
R929	061T0805470 2F	RST CHIPR 47 KOHM +-1% 1/8W
R971	061T0805472	RST CHIPR 4.7 KOHM +-5% 1/8W
R909	061T0805563	RST CHIPR 56 KOHM +-5% 1/8W
R913	061T0805620 2F	RST CHIPR 62 KOHM +-1% 1/8W
F902	061T1206000 4	RST CHIPR 0 OHM +-5% 1/4W
F903	061T1206000 4	RST CHIPR 0 OHM +-5% 1/4W
R977	061T1206000 4	RST CHIPR 0 OHM +-5% 1/4W
R986	061T1206101	RST CHIPR 100 OHM +-5% 1/4W
R985	061T1206101	RST CHIPR 100 OHM +-5% 1/4W
R984	061T1206101	RST CHIPR 100 OHM +-5% 1/4W
R960	061T1206101	RST CHIPR 100 OHM +-5% 1/4W
R944	061T1206102	RST CHIPR 1 KOHM +-5% 1/4W
R963	061T1206103	RST CHIPR 10 KOHM +-5% 1/4W
R992	061T1206105	RST CHIPR 1 MOHM +-5% 1/4W
R993	061T1206105	RST CHIPR 1 MOHM +-5% 1/4W
R994	061T1206105	RST CHIPR 1 MOHM +-5% 1/4W
R910	061T1206220	RST CHIPR 22 OHM +-5% 1/4W
R901	061T1206334	RST CHIPR 330 KOHM +-5% 1/4W
R902	061T1206334	RST CHIPR 330 KOHM +-5% 1/4W
R983	061T1206334	RST CHIPR 330 KOHM +-5% 1/4W
R989	061T1206470	RST CHIPR 47 OHM +-5% 1/4W
R988	061T1206470	RST CHIPR 47 OHM +-5% 1/4W
R987	061T1206470	RST CHIPR 47 OHM +-5% 1/4W
R982	061T1206470	RST CHIPR 47 OHM +-5% 1/4W
R981	061T1206470	RST CHIPR 47 OHM +-5% 1/4W
R980	061T1206470	RST CHIPR 47 OHM +-5% 1/4W
R956	061T1206470	RST CHIPR 47 OHM +-5% 1/4W
R919	061T1206470	RST CHIPR 47 OHM +-5% 1/4W
R962	061T1206471	RST CHIPR 470 OHM +-5% 1/4W
R945	061T1206479	RST CHIPR 4.7 OHM +-5% 1/4W

R969	061T1206684	RST CHIPR 680KOHM +-5% 1/4W
R938	061T1206684	RST CHIPR 680KOHM +-5% 1/4W
R928	061T1206684	RST CHIPR 680KOHM +-5% 1/4W
C969	065T0805102 31	1000PF 50V NPO
C977	065T0805102 32	CHIP 1000PF 50V X7R 0805
C920	065T0805102 32	CHIP 1000PF 50V X7R 0805
C912	065T0805102 32	CHIP 1000PF 50V X7R 0805
C948	065T0805103 32	10NF/50V/0805/X7R
C917	065T0805103 32	10NF/50V/0805/X7R
C926	065T0805104 32	CHIP 0.1UF 50V X7R
C908	065T0805104 32	CHIP 0.1UF 50V X7R
C925	065T0805105 22	CHIP 1UF 25V X7R 0805
C963	065T0805105 37	CHIP 1UF 50V Y5V
C956	065T0805105 37	CHIP 1UF 50V Y5V
C944	065T0805105 37	CHIP 1UF 50V Y5V
C935	065T0805105 37	CHIP 1UF 50V Y5V
C916	065T0805105 37	CHIP 1UF 50V Y5V
C968	065T0805152 32	CHIP 1500PF 50V X7R 0805
C950	065T0805224 22	CAIP CAP 0.22 UF 25V X7R
C921	065T0805224 32	0805.0.22UF.K.50V.X7R
C930	065T0805224 32	0805.0.22UF.K.50V.X7R
C945	065T0805332 32	CAP 0805 3300PF K 50V X7R
C974	065T0805332 32	CAP 0805 3300PF K 50V X7R
C975	065T0805332 32	CAP 0805 3300PF K 50V X7R
C923	065T0805334 22	CHIP 0.33UF +-10% 25V X7R 0805
C953	065T0805334 32 GP	MLCC 0805 0.33UF K 50V X7R
C964	065T0805471 31	CHIP 470PF 50V NPO
C967	065T0805472 32	MLCC 0805 CAP 4700PF K 50V X7R
C942	065T0805473 32	CHIP 0.047UF 50V X7R
C965	065T0805474 22	CHIP 0.47UF 25V X7R
C928	065T0805560 31	MLCC 0805 CAP 56PF J 50V NPO
C954	065T0805561 31	0805.560PF.J.50V.NPO
C949	065T1206222 72	MLCC 1206 2200PF K 500V X7R
C976	065T1206222 72	MLCC 1206 2200PF K 500V X7R
D920	093T 6432S	IN4148W
D919	093T 6432S	IN4148W
D915	093T 6432S	IN4148W
D907	093T 6432S	IN4148W
ZD931	093T 39S 15 T	RLZ15B
ZD902	093T 39S 15 T	RLZ15B
ZD903	093T 39S 24 T	RLZ 5.6B LLDS
ZD901	093T 39S 97 T	DIODE SMAJ14A LITEON

D901	093T3060 10	ML35PT
D923	093T5004 1	SR54 T0-214AA
C919	006T 31502	1.5MM RIVET
C973	006T 31502	1.5MM RIVET
L904	006T 31502	1.5MM RIVET
L905	006T 31502	1.5MM RIVET
L906	006T 31502	1.5MM RIVET
Q902	006T 31502	1.5MM RIVET
Q903	006T 31502	1.5MM RIVET
T901	006T 31502	1.5MM RIVET
T902	006T 31502	1.5MM RIVET
IC906	056T 158 10 T	IC AZ431AZ-AE1 TO-92 AAC
IC908	056T 158 10 T	IC AZ431AZ-AE1 TO-92 AAC
Q908	057T 420 3 T	KTA1273
R974	061T 17210252T	RST CFR 1KOHM +-5% 1/4W
R917	061T 60247052T	CFR 47OHM +-5% 1/6W
C962	064T701J1040AT	0.1UF J 50V
C940	067T215Y1007KT	EC105 10U 50V KEM50V
C937	067T215Y2207KT	EC CAP 22UF 50V
C918	067T215Y4707KT	47UF 50V
C915	067T215Y4707KT	47UF 50V
C909	067T215Y4707KT	47UF 50V
F901	084T 55 4	FUSE 382-5A 250V WICKMANN
D916	093T 6038T52T	FR103
D913	093T 6038T52T	FR103
D909	093T1100 1052T	BA159GPT
J916	095T 90 23	JUMP WIRE
J915	095T 90 23	JUMP WIRE
J914	095T 90 23	JUMP WIRE
J913	095T 90 23	JUMP WIRE
J912	095T 90 23	JUMP WIRE
J911	095T 90 23	JUMP WIRE
J908	095T 90 23	JUMP WIRE
J907	095T 90 23	JUMP WIRE
J906	095T 90 23	JUMP WIRE
J905	095T 90 23	JUMP WIRE
J904	095T 90 23	JUMP WIRE
J903	095T 90 23	JUMP WIRE
J902	095T 90 23	JUMP WIRE
J901	095T 90 23	JUMP WIRE
J917	095T 90 23	JUMP WIRE
R990	095T 90 23	JUMP WIRE

J938	095T 90 23	JUMP WIRE
J937	095T 90 23	JUMP WIRE
J936	095T 90 23	JUMP WIRE
J934	095T 90 23	JUMP WIRE
J932	095T 90 23	JUMP WIRE
J931	095T 90 23	JUMP WIRE
J928	095T 90 23	JUMP WIRE
J927	095T 90 23	JUMP WIRE
J926	095T 90 23	JUMP WIRE
J925	095T 90 23	JUMP WIRE
J924	095T 90 23	JUMP WIRE
J923	095T 90 23	JUMP WIRE
J922	095T 90 23	JUMP WIRE
	715T2463 3	POWER BOARD PCB
	CBPF7Z4KQ7	MAIN BOARD
CN6A3	033T3278 2	WAFER
CN6A1	033T3278 3	WAFER
CN107	033T3278 3	WAFER
CN903	033T3802 2B Y	CONNECTOR
CN901	033T380212B Y	CONNECTOR
CN419	033T380213B Y	CONNECTOR
CN407	033T8027 36	WAFER
	040T 457624 1B	CPU LABEL
	040T 45762412B	CBPC LABEL
R936	061T152M120 64	RST MOFR 12 OHM +-5% 2WS
R935	061T152M120 64	RST MOFR 12 OHM +-5% 2WS
R931	061T153M180 59	18 OHM 5% 3W
R930	061T153M180 59	18 OHM 5% 3W
C929	067T 215221 3H	CAP 105℃ 220UF M 16V
C971	067T215V470 4N	EC 105℃ CAP 47UF M 25V
L6B1	073T 253158 H	CHOKE COIL 22UH+/-25%
L6A9	073T 253158 H	CHOKE COIL 22UH+/-25%
L6A4	073T 253158 H	CHOKE COIL 22UH+/-25%
L6A2	073T 253158 H	CHOKE COIL 22UH+/-25%
	085T 583510	GASKET
CN104	088T 78 13 7C	RCA JACK
CN108	088T 78 13 BC	RCA JACK 2*3 B/W/R+R/B/G
CN101	088T 78 1321C	RCA JACK 1*1 W/R
CN600	088T 30211K	PHONE JACK
CN103	088T 30214K	PHONE JACK
CN102	088T 35315F H	DB15 RIGHT ANGLE FEMALE
	090T6068 2	HEAT SINK

X401	093T 2262B J	CRYSTAL NXS25.000 AC 20PF HC-49/US NSK
X901	093T 2286B J	XTL NXS4.000AC18F-KAB5 HC49/U-S
TU1	094TNTATALL 2T	TUNER NTSC+ATSC DTT76832
C6A3	064T176J474 0T	0.47UF +-5% 50/63V
C6E9	064T176J474 0T	0.47UF +-5% 50/63V
C970	067T 2151007NT	10UF 50V NCC 5*11MM
C968	067T 2152207NT	KY50VB22M-TP5 5*11
C192	067T 305100 3T	10UF 16V
C189	067T 305100 3T	10UF 16V
C186	067T 305100 3T	10UF 16V
C185	067T 305100 3T	10UF 16V
C184	067T 305100 3T	10UF 16V
C181	067T 305100 3T	10UF 16V
C180	067T 305100 3T	10UF 16V
C404	067T 305100 3T	10UF 16V
C724	067T 305100 3T	10UF 16V
C4J9	067T 305100 3T	10UF 16V
C4J8	067T 305100 3T	10UF 16V
C4J3	067T 305100 3T	10UF 16V
C469	067T 305100 3T	10UF 16V
C432	067T 305100 3T	10UF 16V
C431	067T 305100 3T	10UF 16V
C424	067T 305100 3T	10UF 16V
C423	067T 305100 3T	10UF 16V
C416	067T 305100 3T	10UF 16V
C415	067T 305100 3T	10UF 16V
C414	067T 305100 3T	10UF 16V
C405	067T 305100 3T	10UF 16V
C177	067T 305101 3T	100UF 16V 105C
C178	067T 305101 3T	100UF 16V 105C
C179	067T 305101 3T	100UF 16V 105C
C943	067T 305101 4T	CAP 105℃ 100UF M 25V
C195	067T 305220 3T	EC 105℃ 22UF M 16V
C199	067T 305220 3T	EC 105℃ 22UF M 16V
C466	067T 305220 3T	EC 105℃ 22UF M 16V
C4B7	067T 305220 3T	EC 105℃ 22UF M 16V
C4B8	067T 305220 3T	EC 105℃ 22UF M 16V
C529	067T 305220 3T	EC 105℃ 22UF M 16V
C530	067T 305220 3T	EC 105℃ 22UF M 16V
C532	067T 305220 3T	EC 105℃ 22UF M 16V
C535	067T 305220 3T	EC 105℃ 22UF M 16V
C940	067T 305221 2T	CAP 105℃ 220UF M 10V

C954	067T 305221 2T	CAP 105℃ 220UF M 10V
C909	067T 305470 3T	EC 105℃ 47UF M 16V
C905	067T 305470 3T	EC 105℃ 47UF M 16V
C6F9	067T 305470 3T	EC 105℃ 47UF M 16V
C601	067T 305470 3T	EC 105℃ 47UF M 16V
C477	067T 305470 3T	EC 105℃ 47UF M 16V
C260	067T 305470 3T	EC 105℃ 47UF M 16V
C1A8	067T 305470 3T	EC 105℃ 47UF M 16V
C1A5	067T 305470 3T	EC 105℃ 47UF M 16V
C1A4	067T 305470 3T	EC 105℃ 47UF M 16V
C1A0	067T 305470 3T	EC 105℃ 47UF M 16V
C129	067T 305470 3T	EC 105℃ 47UF M 16V
C914	067T 305470 3T	EC 105℃ 47UF M 16V
C934	067T 305470 3T	EC 105℃ 47UF M 16V
C935	067T 305470 3T	EC 105℃ 47UF M 16V
C605	067T 305471 1T	EC 105℃ 470UF M 6.3V
C606	067T 305471 1T	EC 105℃ 470UF M 6.3V
C924	067T215Y1007KT	EC105 10U 50V KEM50V
C927	067T215Y2212KT	LOW ESR EC 220UF 10V 6.3*11MM
C928	067T215Y2212KT	LOW ESR EC 220UF 10V 6.3*11MM
FL902	053T 43 1	FILTER BULLWILL
FL903	053T 43 1	FILTER BULLWILL
U909	056T 133 23 R	BA17809FP-E2
U908	056T 133 27 R	IC BA05FP-E2 BY ROHM
U602	056T 158501	IC AZ431AN-AE1 SOT23-3 AAC
U903	056T 563 9	AIC1084PM
U912	056T 563 9	AIC1084PM
U911	056T 56314A	IC AP1501-K5LA TO-263-5L ANACHIP
U907	056T 56314A	IC AP1501-K5LA TO-263-5L ANACHIP
U504	056T 567 7	MST9883C-140 LQFP-80 BY MST
U910	056T 585 4	AIC1117-33PY ANALOG
U501	056T 585 4	AIC1117-33PY ANALOG
U500	056T 585 4	AIC1117-33PY ANALOG
U261	056T 585 11	AZ1117D-5.0-E1
U601	056T 593 17	NTM2761RB2
U103	056T 614 1	IC 74HC4052D PHILIPS
U402	056T 61550C	NT5DS16M16CS-5T
U600	056T 616 8	TPA6110A2DGNR
U260	056T 616 35	IC NJM4580V-TE2-#ZZZB SSOP8
U6A1	056T 616901	IC TPA3005D2PHP PQFP48
U108	056T 625 1	NJM-2244M-TE1/JRC
U417	056T 632 1	IC 74HC4066DQ BY PHILIPS

U107	056T 634 2 1	PI5V330SSQE PERICOMQSOP-16
U101	056T 638603	IC CS5340-CZZ CIRRUS
U401	056T 644 7	IC ZR39760HGCF-A1 PBGA-400 ZORAN
U408	056T 645 1	HIN232CB-T S016 INTERSIL
U420	056T 652 4	PCA9515ADP TSSOP
U414	056T 662 4	RCLAMP0514M.TBT
U415	056T 662 4	RCLAMP0514M.TBT
U905	056T1125172 XEZ9	P89LPC930FDH
U405	056T1130 3	CS4335-KSZ SOIC-8
U106	056T1133 34	M24C02-WMN6TP
U403	056T1133103EZ9	IC M25P32-VMF6P 32M S0-16
U412	056T113353A	M24C32-WMN6TP
U503	056T4LVT 14 P	IC 74LVT14D,118 BY SO-14 PHILIPS
Q401	057T 758 1	FET 2N7002E VISHAY
Q402	057T 758 1	FET 2N7002E VISHAY
Q908	057T 763 3	AO4411L SO-8 BY AOS SMT
Q909	057T 763 3	AO4411L SO-8 BY AOS SMT
Q911	057T 763 3	AO4411L SO-8 BY AOS SMT
Q100	057T 765 1	2SC2412KR
Q101	057T 765 1	2SC2412KR
Q103	057T 765 1	2SC2412KR
Q105	057T 765 1	2SC2412KR
Q107	057T 765 1	2SC2412KR
Q108	057T 765 1	2SC2412KR
Q912	057T 765 1	2SC2412KR
Q910	057T 765 1	2SC2412KR
Q907	057T 765 1	2SC2412KR
Q906	057T 765 1	2SC2412KR
Q905	057T 765 1	2SC2412KR
Q903	057T 765 1	2SC2412KR
Q901	057T 765 1	2SC2412KR
Q701	057T 765 1	2SC2412KR
Q6A3	057T 765 1	2SC2412KR
Q6A2	057T 765 1	2SC2412KR
Q403	057T 765 1	2SC2412KR
Q260	057T 765 1	2SC2412KR
Q109	057T 765 1	2SC2412KR
Q702	057T 766 1	2SA1037AK BY ROHM
RP505	061T 125101 8	RST CHIP AR 8P4R 100 OHM +-5% 1/16W
RP504	061T 125101 8	RST CHIP AR 8P4R 100 OHM +-5% 1/16W
RP503	061T 125101 8	RST CHIP AR 8P4R 100 OHM +-5% 1/16W
RP502	061T 125101 8	RST CHIP AR 8P4R 100 OHM +-5% 1/16W

RP501	061T 125101 8	RST CHIP AR 8P4R 100 OHM +-5% 1/16W
RP500	061T 125101 8	RST CHIP AR 8P4R 100 OHM +-5% 1/16W
RP410	061T 125150 8	RST CHIP AR 8P4R 15 OHM +-5% 1/16W
RP409	061T 125150 8	RST CHIP AR 8P4R 15 OHM +-5% 1/16W
RP408	061T 125150 8	RST CHIP AR 8P4R 15 OHM +-5% 1/16W
RP407	061T 125150 8	RST CHIP AR 8P4R 15 OHM +-5% 1/16W
RP404	061T 125150 8	RST CHIP AR 8P4R 15 OHM +-5% 1/16W
RP403	061T 125150 8	RST CHIP AR 8P4R 15 OHM +-5% 1/16W
RP402	061T 125150 8	RST CHIP AR 8P4R 15 OHM +-5% 1/16W
RP401	061T 125150 8	RST CHIP AR 8P4R 15 OHM +-5% 1/16W
R158	061T0603000	CHIP 0OHM 1/16W
R157	061T0603000	CHIP 0OHM 1/16W
R156	061T0603000	CHIP 0OHM 1/16W
R615	061T0603000	CHIP 0OHM 1/16W
R6D0	061T0603000	CHIP 0OHM 1/16W
R728	061T0603000	CHIP 0OHM 1/16W
R731	061T0603000	CHIP 0OHM 1/16W
R919	061T0603000	CHIP 0OHM 1/16W
R920	061T0603000	CHIP 0OHM 1/16W
R938	061T0603000	CHIP 0OHM 1/16W
R944	061T0603000	CHIP 0OHM 1/16W
R952	061T0603000	CHIP 0OHM 1/16W
R956	061T0603000	CHIP 0OHM 1/16W
R957	061T0603000	CHIP 0OHM 1/16W
R532	061T0603000	CHIP 0OHM 1/16W
R533	061T0603000	CHIP 0OHM 1/16W
R1H5	061T0603000	CHIP 0OHM 1/16W
R1H6	061T0603000	CHIP 0OHM 1/16W
R614	061T0603000	CHIP 0OHM 1/16W
R1H4	061T0603000	CHIP 0OHM 1/16W
R2032	061T0603000	CHIP 0OHM 1/16W
R2033	061T0603000	CHIP 0OHM 1/16W
R2035	061T0603000	CHIP 0OHM 1/16W
R2036	061T0603000	CHIP 0OHM 1/16W
R2080	061T0603000	CHIP 0OHM 1/16W
R20D0	061T0603000	CHIP 0OHM 1/16W
R2A5	061T0603000	CHIP 0OHM 1/16W
R2A6	061T0603000	CHIP 0OHM 1/16W
R4A5	061T0603000	CHIP 0OHM 1/16W
R4K0	061T0603000	CHIP 0OHM 1/16W
R4T1	061T0603000	CHIP 0OHM 1/16W
R608	061T0603000	CHIP 0OHM 1/16W

R610	061T0603000	CHIP 0OHM 1/16W
R611	061T0603000	CHIP 0OHM 1/16W
R152	061T0603000	CHIP 0OHM 1/16W
R151	061T0603000	CHIP 0OHM 1/16W
R150	061T0603000	CHIP 0OHM 1/16W
R455	061T0603100	CHIP 10OHM 1/16W
R702	061T0603101	CHIP 100OHM 1/16W
R701	061T0603101	CHIP 100OHM 1/16W
R940	061T0603101	CHIP 100OHM 1/16W
R917	061T0603101	CHIP 100OHM 1/16W
R916	061T0603101	CHIP 100OHM 1/16W
R6E2	061T0603101	CHIP 100OHM 1/16W
R4S2	061T0603101	CHIP 100OHM 1/16W
R4G1	061T0603101	CHIP 100OHM 1/16W
R2A3	061T0603101	CHIP 100OHM 1/16W
R260	061T0603101	CHIP 100OHM 1/16W
R2A1	061T0603102	CHIP 1K OHM 1/16W
R426	061T0603102	CHIP 1K OHM 1/16W
R427	061T0603102	CHIP 1K OHM 1/16W
R435	061T0603102	CHIP 1K OHM 1/16W
R437	061T0603102	CHIP 1K OHM 1/16W
C4K6	061T0603102	CHIP 1K OHM 1/16W
C947	061T0603102	CHIP 1K OHM 1/16W
R960	061T0603102	CHIP 1K OHM 1/16W
R932	061T0603102	CHIP 1K OHM 1/16W
R918	061T0603102	CHIP 1K OHM 1/16W
R6F2	061T0603102	CHIP 1K OHM 1/16W
R6F1	061T0603102	CHIP 1K OHM 1/16W
R513	061T0603102	CHIP 1K OHM 1/16W
R501	061T0603102	CHIP 1K OHM 1/16W
R500	061T0603102	CHIP 1K OHM 1/16W
R462	061T0603102	CHIP 1K OHM 1/16W
R441	061T0603102	CHIP 1K OHM 1/16W
R439	061T0603102	CHIP 1K OHM 1/16W
R2A4	061T0603103	CHIP 10KOHM 1/16W
R20A5	061T0603103	CHIP 10KOHM 1/16W
R606	061T0603103	CHIP 10KOHM 1/16W
R4S8	061T0603103	CHIP 10KOHM 1/16W
R4S7	061T0603103	CHIP 10KOHM 1/16W
R4K4	061T0603103	CHIP 10KOHM 1/16W
R4K3	061T0603103	CHIP 10KOHM 1/16W
R4J3	061T0603103	CHIP 10KOHM 1/16W

R4F6	061T0603103	CHIP 10KOHM 1/16W
R4F3	061T0603103	CHIP 10KOHM 1/16W
R4F2	061T0603103	CHIP 10KOHM 1/16W
R4E9	061T0603103	CHIP 10KOHM 1/16W
R4D9	061T0603103	CHIP 10KOHM 1/16W
R489	061T0603103	CHIP 10KOHM 1/16W
R474	061T0603103	CHIP 10KOHM 1/16W
R473	061T0603103	CHIP 10KOHM 1/16W
R464	061T0603103	CHIP 10KOHM 1/16W
R6A2	061T0603103	CHIP 10KOHM 1/16W
R4P8	061T0603103	CHIP 10KOHM 1/16W
R4S9	061T0603103	CHIP 10KOHM 1/16W
R4F4	061T0603103	CHIP 10KOHM 1/16W
R4F1	061T0603103	CHIP 10KOHM 1/16W
R4F0	061T0603103	CHIP 10KOHM 1/16W
R108	061T0603103	CHIP 10KOHM 1/16W
R104	061T0603103	CHIP 10KOHM 1/16W
R964	061T0603103	CHIP 10KOHM 1/16W
R962	061T0603103	CHIP 10KOHM 1/16W
R939	061T0603103	CHIP 10KOHM 1/16W
R925	061T0603103	CHIP 10KOHM 1/16W
R908	061T0603103	CHIP 10KOHM 1/16W
R730	061T0603103	CHIP 10KOHM 1/16W
R6F4	061T0603103	CHIP 10KOHM 1/16W
R6A3	061T0603103	CHIP 10KOHM 1/16W
R203	061T0603103	CHIP 10KOHM 1/16W
R107	061T0603103	CHIP 10KOHM 1/16W
R106	061T0603103	CHIP 10KOHM 1/16W
R165	061T0603104	CHIP 100K OHM 1/16W
R166	061T0603104	CHIP 100K OHM 1/16W
R167	061T0603104	CHIP 100K OHM 1/16W
R168	061T0603104	CHIP 100K OHM 1/16W
R169	061T0603104	CHIP 100K OHM 1/16W
R170	061T0603104	CHIP 100K OHM 1/16W
R4K7	061T0603104	CHIP 100K OHM 1/16W
R4K8	061T0603104	CHIP 100K OHM 1/16W
R4S1	061T0603105	CHIP 1MOHM 1/16W
R1N0	061T0603121	RST CHIPR 120 OHM +-5% 1/10W
R6B6	061T0603124	RST CHIPR 120 KOHM +-5% 1/10W
R517	061T0603150	RST CHIPR 15 OHM +-5% 1/10W
R516	061T0603150	RST CHIPR 15 OHM +-5% 1/10W
R515	061T0603150	RST CHIPR 15 OHM +-5% 1/10W

R514	061T0603150	RST CHIPR 15 OHM +-5% 1/10W
R4Q9	061T0603150	RST CHIPR 15 OHM +-5% 1/10W
R4Q8	061T0603150	RST CHIPR 15 OHM +-5% 1/10W
R4Q7	061T0603150	RST CHIPR 15 OHM +-5% 1/10W
R4Q6	061T0603150	RST CHIPR 15 OHM +-5% 1/10W
R4Q5	061T0603150	RST CHIPR 15 OHM +-5% 1/10W
R4Q4	061T0603150	RST CHIPR 15 OHM +-5% 1/10W
R4Q3	061T0603150	RST CHIPR 15 OHM +-5% 1/10W
R4Q2	061T0603150	RST CHIPR 15 OHM +-5% 1/10W
R4Q1	061T0603150	RST CHIPR 15 OHM +-5% 1/10W
R4Q0	061T0603150	RST CHIPR 15 OHM +-5% 1/10W
R531	061T0603150	RST CHIPR 15 OHM +-5% 1/10W
R530	061T0603150	RST CHIPR 15 OHM +-5% 1/10W
R529	061T0603150	RST CHIPR 15 OHM +-5% 1/10W
R528	061T0603150	RST CHIPR 15 OHM +-5% 1/10W
R527	061T0603150	RST CHIPR 15 OHM +-5% 1/10W
R526	061T0603150	RST CHIPR 15 OHM +-5% 1/10W
R525	061T0603150	RST CHIPR 15 OHM +-5% 1/10W
R524	061T0603150	RST CHIPR 15 OHM +-5% 1/10W
R523	061T0603150	RST CHIPR 15 OHM +-5% 1/10W
R522	061T0603150	RST CHIPR 15 OHM +-5% 1/10W
R521	061T0603150	RST CHIPR 15 OHM +-5% 1/10W
R520	061T0603150	RST CHIPR 15 OHM +-5% 1/10W
R519	061T0603150	RST CHIPR 15 OHM +-5% 1/10W
R518	061T0603150	RST CHIPR 15 OHM +-5% 1/10W
R926	061T0603151	RST CHIPR 150 OHM +-5% 1/10W
R928	061T0603151	RST CHIPR 150 OHM +-5% 1/10W
R197	061T0603152	CHIP 1.5KOHM 1/16W
R198	061T0603152	CHIP 1.5KOHM 1/16W
R4A0	061T0603180	RST CHIPR 18 OHM +-5% 1/10W
R2D1	061T0603201	RST CHIPR 200 OHM +-5% 1/10W
R965	061T0603201	RST CHIPR 200 OHM +-5% 1/10W
R982	061T0603201	RST CHIPR 200 OHM +-5% 1/10W
R713	061T0603202	RST CHIPR 2 KOHM +-5% 1/10W
R933	061T0603202	RST CHIPR 2 KOHM +-5% 1/10W
R954	061T0603202	RST CHIPR 2 KOHM +-5% 1/10W
R269	061T0603203	CHIPR 20K OHM+-5% 1/10W
R268	061T0603203	CHIPR 20K OHM+-5% 1/10W
R2611	061T0603203	CHIPR 20K OHM+-5% 1/10W
R2610	061T0603203	CHIPR 20K OHM+-5% 1/10W
R604	061T0603203	CHIPR 20K OHM+-5% 1/10W
R603	061T0603203	CHIPR 20K OHM+-5% 1/10W

R602	061T0603203	CHIPR 20K OHM+-5% 1/10W
R600	061T0603203	CHIPR 20K OHM+-5% 1/10W
R2D0	061T0603220	CHIP 22OHM 1/16W
R2D3	061T0603220	CHIP 22OHM 1/16W
R481	061T0603220	CHIP 22OHM 1/16W
R482	061T0603220	CHIP 22OHM 1/16W
R485	061T0603220	CHIP 22OHM 1/16W
R1F2	061T0603223	CHIP 22KOHM 1/16W
R194	061T0603223	CHIP 22KOHM 1/16W
R193	061T0603223	CHIP 22KOHM 1/16W
R192	061T0603223	CHIP 22KOHM 1/16W
R191	061T0603223	CHIP 22KOHM 1/16W
R190	061T0603223	CHIP 22KOHM 1/16W
R189	061T0603223	CHIP 22KOHM 1/16W
R188	061T0603223	CHIP 22KOHM 1/16W
R185	061T0603223	CHIP 22KOHM 1/16W
R969	061T0603223	CHIP 22KOHM 1/16W
R968	061T0603223	CHIP 22KOHM 1/16W
R924	061T0603223	CHIP 22KOHM 1/16W
R900	061T0603223	CHIP 22KOHM 1/16W
R6F3	061T0603223	CHIP 22KOHM 1/16W
R605	061T0603223	CHIP 22KOHM 1/16W
R2D7	061T0603223	CHIP 22KOHM 1/16W
R1F5	061T0603223	CHIP 22KOHM 1/16W
R1F4	061T0603223	CHIP 22KOHM 1/16W
R1F3	061T0603223	CHIP 22KOHM 1/16W
R4F7	061T0603240 0F	RST CHIPR 240 OHM +-1% 1/10W
R1H1	061T0603272	CHIP 2.7KOHM 1/16W
R1H2	061T0603272	CHIP 2.7KOHM 1/16W
R1H3	061T0603272	CHIP 2.7KOHM 1/16W
R476	061T0603274	RST CHIPR 270 KOHM +-5% 1/10W
R483	061T0603274	RST CHIPR 270 KOHM +-5% 1/10W
R946	061T0603302	CHIP 3K OHM 5% 1/16
R1J4	061T0603303	RST CHIPR 30 KOHM +-5% 1/10W
R1J6	061T0603303	RST CHIPR 30 KOHM +-5% 1/10W
R1J8	061T0603303	RST CHIPR 30 KOHM +-5% 1/10W
R416	061T0603330	CHIP 33OHM 1/16W
R506	061T0603330	CHIP 33OHM 1/16W
R507	061T0603330	CHIP 33OHM 1/16W
FB130	061T0603330	CHIP 33OHM 1/16W
FB131	061T0603330	CHIP 33OHM 1/16W
R966	061T0603331	RST CHIPR 330 OHM +-5% 1/10W

R502	061T0603332	RST CHIPR 3.3 KOHM +-5% 1/10W
R708	061T0603332	RST CHIPR 3.3 KOHM +-5% 1/10W
R709	061T0603332	RST CHIPR 3.3 KOHM +-5% 1/10W
R909	061T0603332	RST CHIPR 3.3 KOHM +-5% 1/10W
R921	061T0603332	RST CHIPR 3.3 KOHM +-5% 1/10W
R922	061T0603332	RST CHIPR 3.3 KOHM +-5% 1/10W
R1J7	061T0603333	RST CHIPR 33 KOHM +-5% 1/10W
R1J9	061T0603333	RST CHIPR 33 KOHM +-5% 1/10W
R1J5	061T0603333	RST CHIPR 33 KOHM +-5% 1/10W
R454	061T0603390 0F	RST CHIPR 390 OHM +-1% 1/10W
R262	061T0603392	CHIP 3.9KOHM 1/16W
R261	061T0603392	CHIP 3.9KOHM 1/16W
R4J4	061T0603392	CHIP 3.9KOHM 1/16W
R703	061T0603470	RST CHIPR 47 OHM +-5% 1/10W
R4S5	061T0603470	RST CHIPR 47 OHM +-5% 1/10W
R4S4	061T0603470	RST CHIPR 47 OHM +-5% 1/10W
R4S3	061T0603470	RST CHIPR 47 OHM +-5% 1/10W
R4G0	061T0603470	RST CHIPR 47 OHM +-5% 1/10W
R2050	061T0603471	RST CHIPR 470OHM +-5% 1/10W
R2D2	061T0603471	RST CHIPR 470OHM +-5% 1/10W
R440	061T0603472	CHIP 4.7KOHM 1/16W
R438	061T0603472	CHIP 4.7KOHM 1/16W
R436	061T0603472	CHIP 4.7KOHM 1/16W
R434	061T0603472	CHIP 4.7KOHM 1/16W
R433	061T0603472	CHIP 4.7KOHM 1/16W
R430	061T0603472	CHIP 4.7KOHM 1/16W
R429	061T0603472	CHIP 4.7KOHM 1/16W
R428	061T0603472	CHIP 4.7KOHM 1/16W
R406	061T0603472	CHIP 4.7KOHM 1/16W
R141	061T0603472	CHIP 4.7KOHM 1/16W
R119	061T0603472	CHIP 4.7KOHM 1/16W
R443	061T0603472	CHIP 4.7KOHM 1/16W
R729	061T0603472	CHIP 4.7KOHM 1/16W
R725	061T0603472	CHIP 4.7KOHM 1/16W
R715	061T0603472	CHIP 4.7KOHM 1/16W
R4S6	061T0603472	CHIP 4.7KOHM 1/16W
R4G6	061T0603472	CHIP 4.7KOHM 1/16W
R4G5	061T0603472	CHIP 4.7KOHM 1/16W
R4G4	061T0603472	CHIP 4.7KOHM 1/16W
R4G3	061T0603472	CHIP 4.7KOHM 1/16W
R4B4	061T0603472	CHIP 4.7KOHM 1/16W
R468	061T0603472	CHIP 4.7KOHM 1/16W

R467	061T0603472	CHIP 4.7KOHM 1/16W
R458	061T0603472	CHIP 4.7KOHM 1/16W
R139	061T0603473	CHIP 47KOHM 1/16W
R1A3	061T0603473	CHIP 47KOHM 1/16W
R1A2	061T0603473	CHIP 47KOHM 1/16W
R6E6	061T0603473	CHIP 47KOHM 1/16W
R6E5	061T0603473	CHIP 47KOHM 1/16W
R613	061T0603473	CHIP 47KOHM 1/16W
R612	061T0603473	CHIP 47KOHM 1/16W
R4M7	061T0603473	CHIP 47KOHM 1/16W
R291	061T0603473	CHIP 47KOHM 1/16W
R290	061T0603473	CHIP 47KOHM 1/16W
R20C0	061T0603473	CHIP 47KOHM 1/16W
R1B8	061T0603473	CHIP 47KOHM 1/16W
R1B5	061T0603473	CHIP 47KOHM 1/16W
R1B4	061T0603473	CHIP 47KOHM 1/16W
R1B3	061T0603473	CHIP 47KOHM 1/16W
R1B2	061T0603473	CHIP 47KOHM 1/16W
R140	061T0603473	CHIP 47KOHM 1/16W
R950	061T0603473	CHIP 47KOHM 1/16W
R1A0	061T0603473	CHIP 47KOHM 1/16W
R199	061T0603473	CHIP 47KOHM 1/16W
R142	061T0603473	CHIP 47KOHM 1/16W
R1A7	061T0603473	CHIP 47KOHM 1/16W
R1A6	061T0603473	CHIP 47KOHM 1/16W
R1A4	061T0603473	CHIP 47KOHM 1/16W
R1B1	061T0603473	CHIP 47KOHM 1/16W
R1B0	061T0603473	CHIP 47KOHM 1/16W
R1A9	061T0603473	CHIP 47KOHM 1/16W
R1A8	061T0603473	CHIP 47KOHM 1/16W
R961	061T0603473	CHIP 47KOHM 1/16W
R963	061T0603473	CHIP 47KOHM 1/16W
R967	061T0603473	CHIP 47KOHM 1/16W
R955	061T0603473	CHIP 47KOHM 1/16W
R138	061T0603473	CHIP 47KOHM 1/16W
R465	061T0603499 9F	RST CHIPR 49.9 OHM +-1% 1/10W
R469	061T0603499 9F	RST CHIPR 49.9 OHM +-1% 1/10W
R4N4	061T0603499 9F	RST CHIPR 49.9 OHM +-1% 1/10W
R945	061T0603511 1F	RST CHIPR 5.11 KOHM +-1% 1/10W
R4K5	061T0603512	RST CHIPR 5.1 KOHM +-5% 1/10W
R4K6	061T0603512	RST CHIPR 5.1 KOHM +-5% 1/10W
R4P9	061T0603560	RST CHIPR 56 OHM +-5% 1/10W

R503	061T0603680	RST CHIPR 68 OHM +-5% 1/10W
R505	061T0603680	RST CHIPR 68 OHM +-5% 1/10W
R504	061T0603680	RST CHIPR 68 OHM +-5% 1/10W
R4J5	061T0603682	RST CHIPR 6.8KOHM +-5% 1/10W
R124	061T0603750 9F	CHIP 75OHM 1/16W 1%
R125	061T0603750 9F	CHIP 75OHM 1/16W 1%
R126	061T0603750 9F	CHIP 75OHM 1/16W 1%
R1D4	061T0603750 9F	CHIP 75OHM 1/16W 1%
R510	061T0603750 9F	CHIP 75OHM 1/16W 1%
R509	061T0603750 9F	CHIP 75OHM 1/16W 1%
R508	061T0603750 9F	CHIP 75OHM 1/16W 1%
R1E4	061T0603750 9F	CHIP 75OHM 1/16W 1%
R1E1	061T0603750 9F	CHIP 75OHM 1/16W 1%
R1E0	061T0603750 9F	CHIP 75OHM 1/16W 1%
R1D9	061T0603750 9F	CHIP 75OHM 1/16W 1%
R1D7	061T0603750 9F	CHIP 75OHM 1/16W 1%
R1D5	061T0603750 9F	CHIP 75OHM 1/16W 1%
R4A2	061T0603821	RST CHIPR 820 OHM +-5% 1/10W
R6F0	061T0603821	RST CHIPR 820 OHM +-5% 1/10W
FB911	061T0805000	RST CHIPR 0 OHM +-5% 1/8W
FB500	061T1206000	RST CHIPR 0 OHM +-5% 1/4W
FB501	061T1206000	RST CHIPR 0 OHM +-5% 1/4W
R200	061T1206000	RST CHIPR 0 OHM +-5% 1/4W
R201	061T1206000	RST CHIPR 0 OHM +-5% 1/4W
R202	061T1206000	RST CHIPR 0 OHM +-5% 1/4W
FB914	061T1206000	RST CHIPR 0 OHM +-5% 1/4W
C4K4	065T0603100 31	CHIP 10PF 50V NPO
C4K5	065T0603100 31	CHIP 10PF 50V NPO
C2100	065T0603101 31	CHIP 100PF 50V NPO
C945	065T0603101 32	CHIP 100PF 50V X7R
C1D3	065T0603101 32	CHIP 100PF 50V X7R
C1D1	065T0603101 32	CHIP 100PF 50V X7R
C1B8	065T0603101 32	CHIP 100PF 50V X7R
C1B4	065T0603101 32	CHIP 100PF 50V X7R
C1B3	065T0603101 32	CHIP 100PF 50V X7R
C1B2	065T0603101 32	CHIP 100PF 50V X7R
C6A2	065T0603102 32	CHIP 1000PF 50V X7R
C6A4	065T0603102 32	CHIP 1000PF 50V X7R
C6E8	065T0603102 32	CHIP 1000PF 50V X7R
C6F0	065T0603102 32	CHIP 1000PF 50V X7R
C708	065T0603102 32	CHIP 1000PF 50V X7R
C735	065T0603102 32	CHIP 1000PF 50V X7R

C736	065T0603102 32	CHIP 1000PF 50V X7R
C963	065T0603102 32	CHIP 1000PF 50V X7R
C965	065T0603102 32	CHIP 1000PF 50V X7R
C500	065T0603102 32	CHIP 1000PF 50V X7R
C4B3	065T0603102 32	CHIP 1000PF 50V X7R
C2099	065T0603102 32	CHIP 1000PF 50V X7R
C2098	065T0603102 32	CHIP 1000PF 50V X7R
C2097	065T0603102 32	CHIP 1000PF 50V X7R
C2096	065T0603102 32	CHIP 1000PF 50V X7R
C2095	065T0603102 32	CHIP 1000PF 50V X7R
C2094	065T0603102 32	CHIP 1000PF 50V X7R
C2093	065T0603102 32	CHIP 1000PF 50V X7R
C4A0	065T0603103 32	CHIP 0.01UF 50V X7R
C4A7	065T0603103 32	CHIP 0.01UF 50V X7R
C4A8	065T0603103 32	CHIP 0.01UF 50V X7R
C4B0	065T0603103 32	CHIP 0.01UF 50V X7R
C4B1	065T0603103 32	CHIP 0.01UF 50V X7R
C4B2	065T0603103 32	CHIP 0.01UF 50V X7R
C4M0	065T0603103 32	CHIP 0.01UF 50V X7R
C6A8	065T0603103 32	CHIP 0.01UF 50V X7R
C6E3	065T0603103 32	CHIP 0.01UF 50V X7R
C6E5	065T0603103 32	CHIP 0.01UF 50V X7R
C6F5	065T0603103 32	CHIP 0.01UF 50V X7R
C739	065T0603103 32	CHIP 0.01UF 50V X7R
C508	065T0603104 32	CHIP 0.1UF 50V X7R
C509	065T0603104 32	CHIP 0.1UF 50V X7R
C510	065T0603104 32	CHIP 0.1UF 50V X7R
C511	065T0603104 32	CHIP 0.1UF 50V X7R
C522	065T0603104 32	CHIP 0.1UF 50V X7R
C521	065T0603104 32	CHIP 0.1UF 50V X7R
C520	065T0603104 32	CHIP 0.1UF 50V X7R
C519	065T0603104 32	CHIP 0.1UF 50V X7R
C518	065T0603104 32	CHIP 0.1UF 50V X7R
C517	065T0603104 32	CHIP 0.1UF 50V X7R
C516	065T0603104 32	CHIP 0.1UF 50V X7R
C515	065T0603104 32	CHIP 0.1UF 50V X7R
C514	065T0603104 32	CHIP 0.1UF 50V X7R
C513	065T0603104 32	CHIP 0.1UF 50V X7R
C512	065T0603104 32	CHIP 0.1UF 50V X7R
C4E6	065T0603104 32	CHIP 0.1UF 50V X7R
C4E4	065T0603104 32	CHIP 0.1UF 50V X7R
C4E2	065T0603104 32	CHIP 0.1UF 50V X7R

C4D9	065T0603104 32	CHIP 0.1UF 50V X7R
C4D8	065T0603104 32	CHIP 0.1UF 50V X7R
C4B9	065T0603104 32	CHIP 0.1UF 50V X7R
C4A9	065T0603104 32	CHIP 0.1UF 50V X7R
C4A6	065T0603104 32	CHIP 0.1UF 50V X7R
C4A5	065T0603104 32	CHIP 0.1UF 50V X7R
C4A3	065T0603104 32	CHIP 0.1UF 50V X7R
C499	065T0603104 32	CHIP 0.1UF 50V X7R
C481	065T0603104 32	CHIP 0.1UF 50V X7R
C480	065T0603104 32	CHIP 0.1UF 50V X7R
C4E7	065T0603104 32	CHIP 0.1UF 50V X7R
C507	065T0603104 32	CHIP 0.1UF 50V X7R
C506	065T0603104 32	CHIP 0.1UF 50V X7R
C4M2	065T0603104 32	CHIP 0.1UF 50V X7R
C4M1	065T0603104 32	CHIP 0.1UF 50V X7R
C4L9	065T0603104 32	CHIP 0.1UF 50V X7R
C4L8	065T0603104 32	CHIP 0.1UF 50V X7R
C4K3	065T0603104 32	CHIP 0.1UF 50V X7R
C4J4	065T0603104 32	CHIP 0.1UF 50V X7R
C4H4	065T0603104 32	CHIP 0.1UF 50V X7R
C4H2	065T0603104 32	CHIP 0.1UF 50V X7R
C4H1	065T0603104 32	CHIP 0.1UF 50V X7R
C4F5	065T0603104 32	CHIP 0.1UF 50V X7R
C4E8	065T0603104 32	CHIP 0.1UF 50V X7R
C705	065T0603104 32	CHIP 0.1UF 50V X7R
C706	065T0603104 32	CHIP 0.1UF 50V X7R
C715	065T0603104 32	CHIP 0.1UF 50V X7R
C734	065T0603104 32	CHIP 0.1UF 50V X7R
C737	065T0603104 32	CHIP 0.1UF 50V X7R
C901	065T0603104 32	CHIP 0.1UF 50V X7R
C904	065T0603104 32	CHIP 0.1UF 50V X7R
C915	065T0603104 32	CHIP 0.1UF 50V X7R
C916	065T0603104 32	CHIP 0.1UF 50V X7R
C918	065T0603104 32	CHIP 0.1UF 50V X7R
C919	065T0603104 32	CHIP 0.1UF 50V X7R
C922	065T0603104 32	CHIP 0.1UF 50V X7R
C942	065T0603104 32	CHIP 0.1UF 50V X7R
C949	065T0603104 32	CHIP 0.1UF 50V X7R
C950	065T0603104 32	CHIP 0.1UF 50V X7R
C953	065T0603104 32	CHIP 0.1UF 50V X7R
C957	065T0603104 32	CHIP 0.1UF 50V X7R
C958	065T0603104 32	CHIP 0.1UF 50V X7R

C969	065T0603104 32	CHIP 0.1UF 50V X7R
C972	065T0603104 32	CHIP 0.1UF 50V X7R
C975	065T0603104 32	CHIP 0.1UF 50V X7R
C523	065T0603104 32	CHIP 0.1UF 50V X7R
C524	065T0603104 32	CHIP 0.1UF 50V X7R
C525	065T0603104 32	CHIP 0.1UF 50V X7R
C526	065T0603104 32	CHIP 0.1UF 50V X7R
C527	065T0603104 32	CHIP 0.1UF 50V X7R
C528	065T0603104 32	CHIP 0.1UF 50V X7R
C531	065T0603104 32	CHIP 0.1UF 50V X7R
C536	065T0603104 32	CHIP 0.1UF 50V X7R
C600	065T0603104 32	CHIP 0.1UF 50V X7R
C614	065T0603104 32	CHIP 0.1UF 50V X7R
C6A1	065T0603104 32	CHIP 0.1UF 50V X7R
C6A5	065T0603104 32	CHIP 0.1UF 50V X7R
C6A6	065T0603104 32	CHIP 0.1UF 50V X7R
C6D3	065T0603104 32	CHIP 0.1UF 50V X7R
C6D5	065T0603104 32	CHIP 0.1UF 50V X7R
C6E4	065T0603104 32	CHIP 0.1UF 50V X7R
C6E6	065T0603104 32	CHIP 0.1UF 50V X7R
C6E7	065T0603104 32	CHIP 0.1UF 50V X7R
C6F1	065T0603104 32	CHIP 0.1UF 50V X7R
C6F6	065T0603104 32	CHIP 0.1UF 50V X7R
C6F8	065T0603104 32	CHIP 0.1UF 50V X7R
C479	065T0603104 32	CHIP 0.1UF 50V X7R
C2092	065T0603104 32	CHIP 0.1UF 50V X7R
C20A1	065T0603104 32	CHIP 0.1UF 50V X7R
C20A2	065T0603104 32	CHIP 0.1UF 50V X7R
C402	065T0603104 32	CHIP 0.1UF 50V X7R
C406	065T0603104 32	CHIP 0.1UF 50V X7R
C407	065T0603104 32	CHIP 0.1UF 50V X7R
C408	065T0603104 32	CHIP 0.1UF 50V X7R
C409	065T0603104 32	CHIP 0.1UF 50V X7R
C410	065T0603104 32	CHIP 0.1UF 50V X7R
C411	065T0603104 32	CHIP 0.1UF 50V X7R
C412	065T0603104 32	CHIP 0.1UF 50V X7R
C413	065T0603104 32	CHIP 0.1UF 50V X7R
C417	065T0603104 32	CHIP 0.1UF 50V X7R
C106	065T0603104 32	CHIP 0.1UF 50V X7R
C108	065T0603104 32	CHIP 0.1UF 50V X7R
C112	065T0603104 32	CHIP 0.1UF 50V X7R
C113	065T0603104 32	CHIP 0.1UF 50V X7R

C114	065T0603104 32	CHIP 0.1UF 50V X7R
C115	065T0603104 32	CHIP 0.1UF 50V X7R
C160	065T0603104 32	CHIP 0.1UF 50V X7R
C173	065T0603104 32	CHIP 0.1UF 50V X7R
C175	065T0603104 32	CHIP 0.1UF 50V X7R
C176	065T0603104 32	CHIP 0.1UF 50V X7R
C1E3	065T0603104 32	CHIP 0.1UF 50V X7R
C2090	065T0603104 32	CHIP 0.1UF 50V X7R
C2091	065T0603104 32	CHIP 0.1UF 50V X7R
C418	065T0603104 32	CHIP 0.1UF 50V X7R
C436	065T0603104 32	CHIP 0.1UF 50V X7R
C437	065T0603104 32	CHIP 0.1UF 50V X7R
C438	065T0603104 32	CHIP 0.1UF 50V X7R
C439	065T0603104 32	CHIP 0.1UF 50V X7R
C443	065T0603104 32	CHIP 0.1UF 50V X7R
C446	065T0603104 32	CHIP 0.1UF 50V X7R
C454	065T0603104 32	CHIP 0.1UF 50V X7R
C459	065T0603104 32	CHIP 0.1UF 50V X7R
C467	065T0603104 32	CHIP 0.1UF 50V X7R
C468	065T0603104 32	CHIP 0.1UF 50V X7R
C470	065T0603104 32	CHIP 0.1UF 50V X7R
C471	065T0603104 32	CHIP 0.1UF 50V X7R
C478	065T0603104 32	CHIP 0.1UF 50V X7R
C419	065T0603104 32	CHIP 0.1UF 50V X7R
C420	065T0603104 32	CHIP 0.1UF 50V X7R
C421	065T0603104 32	CHIP 0.1UF 50V X7R
C422	065T0603104 32	CHIP 0.1UF 50V X7R
C425	065T0603104 32	CHIP 0.1UF 50V X7R
C426	065T0603104 32	CHIP 0.1UF 50V X7R
C427	065T0603104 32	CHIP 0.1UF 50V X7R
C428	065T0603104 32	CHIP 0.1UF 50V X7R
C429	065T0603104 32	CHIP 0.1UF 50V X7R
C430	065T0603104 32	CHIP 0.1UF 50V X7R
C433	065T0603104 32	CHIP 0.1UF 50V X7R
C434	065T0603104 32	CHIP 0.1UF 50V X7R
C435	065T0603104 32	CHIP 0.1UF 50V X7R
C460	065T0603105 25	CHIP 1UF 25V X5R
C4F6	065T0603105 25	CHIP 1UF 25V X5R
C4L7	065T0603105 25	CHIP 1UF 25V X5R
C900	065T0603105 25	CHIP 1UF 25V X5R
C4K0	065T0603152 32	CHIP 1500PF 50V X7R
C4K1	065T0603152 32	CHIP 1500PF 50V X7R

C725	065T0603152 32	CHIP 1500PF 50V X7R
C912	065T0603220 31	CHIP 22PF 50V NPO
C913	065T0603220 31	CHIP 22PF 50V NPO
C713	065T0603220 31	CHIP 22PF 50V NPO
C712	065T0603220 31	CHIP 22PF 50V NPO
C6D6	065T0603221 31	CHIP 220PF 50V NPO
C610	065T0603223 32	CHIP 0.022UF 50V X7R 0603
C456	065T0603224 22	CHIP CAP 0.22UF 25V X7
C170	065T0603224 22	CHIP CAP 0.22UF 25V X7
C974	065T0603224 32	MLCC 0603 0.22UF K 50V X7R
C973	065T0603224 32	MLCC 0603 0.22UF K 50V X7R
C967	065T0603224 32	MLCC 0603 0.22UF K 50V X7R
C966	065T0603224 32	MLCC 0603 0.22UF K 50V X7R
C613	065T0603224 32	MLCC 0603 0.22UF K 50V X7R
C4F4	065T0603270 31	CHIP 27PF 50V NPO
C4F3	065T0603270 31	CHIP 27PF 50V NPO
C1B9	065T0603331 31	CHIP 330PF 50V NPO
C697	065T0603331 31	CHIP 330PF 50V NPO
C501	065T0603392 32	CHIP 3900PF 50V X7R
C502	065T0603393 32	CHIP 0.039UF 50V X7R
C4K7	065T0603470 32	CHIP 47PF 50V X7R
C165	065T0603470 32	CHIP 47PF 50V X7R
C1B7	065T0603470 32	CHIP 47PF 50V X7R
C1D0	065T0603470 32	CHIP 47PF 50V X7R
C1D4	065T0603470 32	CHIP 47PF 50V X7R
C1D6	065T0603470 32	CHIP 47PF 50V X7R
C1D9	065T0603470 32	CHIP 47PF 50V X7R
C1E0	065T0603470 32	CHIP 47PF 50V X7R
C458	065T0603470 32	CHIP 47PF 50V X7R
C462	065T0603470 32	CHIP 47PF 50V X7R
C703	065T0603470 32	CHIP 47PF 50V X7R
C503	065T0603473 32	CHIP 0.047UF 50V X7R
C504	065T0603473 32	CHIP 0.047UF 50V X7R
C505	065T0603473 32	CHIP 0.047UF 50V X7R
C533	065T060347931Y	MLCC 0603 4.7PF B/C 50V NPO
C726	065T0603561 31	CHIP 560PF 50V NPO
C6D8	065T0805105 37	CHIP 1UF 50V Y5V
C6B2	065T0805105 37	CHIP 1UF 50V Y5V
C604	065T0805105 37	CHIP 1UF 50V Y5V
C603	065T0805105 37	CHIP 1UF 50V Y5V
C602	065T0805105 37	CHIP 1UF 50V Y5V
C4A4	065T0805105 37	CHIP 1UF 50V Y5V

C4A2	065T0805105 37	CHIP 1UF 50V Y5V
C498	065T0805105 37	CHIP 1UF 50V Y5V
C497	065T0805105 37	CHIP 1UF 50V Y5V
C496	065T0805105 37	CHIP 1UF 50V Y5V
C495	065T0805105 37	CHIP 1UF 50V Y5V
C109	065T0805105 37	CHIP 1UF 50V Y5V
C107	065T0805105 37	CHIP 1UF 50V Y5V
C6F7	065T0805224 32	0805.0.22UF.K.50V.X7R
C6D2	065T0805224 32	0805.0.22UF.K.50V.X7R
C6B4	065T0805224 32	0805.0.22UF.K.50V.X7R
C6B1	065T0805224 32	0805.0.22UF.K.50V.X7R
C923	065T0805225 17	CHIP 2.2UF 16V Y5V
C267	065T120610615K W	CAP CHIP 1206 10UF K 16V X5R
C268	065T120610615K W	CAP CHIP 1206 10UF K 16V X5R
C269	065T120610615K W	CAP CHIP 1206 10UF K 16V X5R
C20A0	065T1206475 27	MLCC 1206 CAP 4.7UF Z 25V Y5V
C265	065T1206475 27	MLCC 1206 CAP 4.7UF Z 25V Y5V
C266	065T1206475 27	MLCC 1206 CAP 4.7UF Z 25V Y5V
C738	065T1206475 27	MLCC 1206 CAP 4.7UF Z 25V Y5V
C6F3	065T1206475 27	MLCC 1206 CAP 4.7UF Z 25V Y5V
C6F2	065T1206475 27	MLCC 1206 CAP 4.7UF Z 25V Y5V
C6B9	065T1206475 27	MLCC 1206 CAP 4.7UF Z 25V Y5V
C6B5	065T1206475 27	MLCC 1206 CAP 4.7UF Z 25V Y5V
C6A9	065T1206475 27	MLCC 1206 CAP 4.7UF Z 25V Y5V
C6A7	065T1206475 27	MLCC 1206 CAP 4.7UF Z 25V Y5V
C616	065T1206475 27	MLCC 1206 CAP 4.7UF Z 25V Y5V
C615	065T1206475 27	MLCC 1206 CAP 4.7UF Z 25V Y5V
C612	065T1206475 27	MLCC 1206 CAP 4.7UF Z 25V Y5V
C611	065T1206475 27	MLCC 1206 CAP 4.7UF Z 25V Y5V
C125	067T311F470 3T GP	47UF 16V 105 V TYPE WT SERIES
C1A7	067T311F470 3T GP	47UF 16V 105 V TYPE WT SERIES
C1A9	067T311F470 3T GP	47UF 16V 105 V TYPE WT SERIES
C961	067T411F1003XT	EC 105℃ CHIP 10UF M 16V
C941	067T411F1003XT	EC 105℃ CHIP 10UF M 16V
FB917	071T 56G301 EA	CHIP BEAD 300 OHM 0805
FB915	071T 56G301 EA	CHIP BEAD 300 OHM 0805
FB6A4	071T 56G301 EA	CHIP BEAD 300 OHM 0805
FB6A3	071T 56G301 EA	CHIP BEAD 300 OHM 0805
FB6A2	071T 56G301 EA	CHIP BEAD 300 OHM 0805
FB6A1	071T 56G301 EA	CHIP BEAD 300 OHM 0805
FB604	071T 56G301 EA	CHIP BEAD 300 OHM 0805
FB411	071T 56G301 EA	CHIP BEAD 300 OHM 0805

FB410	071T 56G301 EA	CHIP BEAD 300 OHM 0805
FB106	071T 56U601	BEAD 600 OHM
FB110	071T 56U601	BEAD 600 OHM
FB607	071T 56U601	BEAD 600 OHM
FB412	071T 57G301 EA	CHIP BEAD
FB125	071T 57G601	BEAD 1206 600 OHM
FB902	071T 57G601	BEAD 1206 600 OHM
FB900	071T 57G601	BEAD 1206 600 OHM
FB712	071T 57G601	BEAD 1206 600 OHM
FB706	071T 57G601	BEAD 1206 600 OHM
FB704	071T 57G601	BEAD 1206 600 OHM
FB703	071T 57G601	BEAD 1206 600 OHM
FB701	071T 57G601	BEAD 1206 600 OHM
FB601	071T 57G601	BEAD 1206 600 OHM
FB503	071T 57G601	BEAD 1206 600 OHM
FB502	071T 57G601	BEAD 1206 600 OHM
FB402	071T 57G601	BEAD 1206 600 OHM
FB401	071T 57G601	BEAD 1206 600 OHM
FB129	071T 57G601	BEAD 1206 600 OHM
FB128	071T 57G601	BEAD 1206 600 OHM
FB405	071T 58B151 K	CHIP BEAD 150 OHMFBMA-11-32251
FB404	071T 58B151 K	CHIP BEAD 150 OHMFBMA-11-32251
FB403	071T 58B151 K	CHIP BEAD 150 OHMFBMA-11-32251
FB406	071T 58B151 K	CHIP BEAD 150 OHMFBMA-11-32251
FB407	071T 58B151 K	CHIP BEAD 150 OHMFBMA-11-32251
FB408	071T 58B151 K	CHIP BEAD 150 OHMFBMA-11-32251
FB417	071T 58B151 K	CHIP BEAD 150 OHMFBMA-11-32251
FB102	071T 59B121	BEAD 0603 120 OHM
FB105	071T 59B121	BEAD 0603 120 OHM
FB108	071T 59B121	BEAD 0603 120 OHM
FB123	071T 59B121	BEAD 0603 120 OHM
FB121	071T 59B121	BEAD 0603 120 OHM
FB120	071T 59B121	BEAD 0603 120 OHM
FB118	071T 59B121	BEAD 0603 120 OHM
FB117	071T 59B121	BEAD 0603 120 OHM
FB114	071T 59B121	BEAD 0603 120 OHM
FB112	071T 59B121	BEAD 0603 120 OHM
R1H9	071T 59K800	CHIP BEAD
R1J0	071T 59K800	CHIP BEAD
R1J1	071T 59K800	CHIP BEAD
L902	073T253S 3 H	SMD CHOKE 33UH 2.3A
L433	073T253S 6 T GP	SMD CHOKE 90 OHM ACM2012D-900

L432	073T253S 6 T GP	SMD CHOKE 90 OHM ACM2012D-900
L431	073T253S 6 T GP	SMD CHOKE 90 OHM ACM2012D-900
L430	073T253S 6 T GP	SMD CHOKE 90 OHM ACM2012D-900
L901	073T253S 19 H	SMD CHOKE 33UH 3A
F900	084T 52 15 B GP	CHIP FUSE 1.0A 63V
CN413	088T 340 19CHA	HDMI HEADER 19P 0471518121
D20A0	093G 52S 7 T	DIODE SM4001A 1A/50V SMA
ZD603	093T 39147SEM	ZMM5V6
ZD149	093T 39147SEM	ZMM5V6
ZD148	093T 39147SEM	ZMM5V6
ZD147	093T 39147SEM	ZMM5V6
ZD146	093T 39147SEM	ZMM5V6
ZD139	093T 39147SEM	ZMM5V6
ZD138	093T 39147SEM	ZMM5V6
ZD126	093T 39147SEM	ZMM5V6
ZD125	093T 39147SEM	ZMM5V6
ZD121	093T 39147SEM	ZMM5V6
ZD120	093T 39147SEM	ZMM5V6
ZD400	093T 60230	BAT54C BY MCC
ZD100	093T 60230	BAT54C BY MCC
ZD291	093T 64 33	BAV99 SOT-23
ZD290	093T 64 33	BAV99 SOT-23
ZD124	093T 64 33	BAV99 SOT-23
ZD123	093T 64 33	BAV99 SOT-23
ZD122	093T 64 33	BAV99 SOT-23
ZD150	093T 64 37 N	V-PORT-0603-100K V05
ZD602	093T 64 37 N	V-PORT-0603-100K V05
ZD600	093T 64 37 N	V-PORT-0603-100K V05
ZD403	093T 64 37 N	V-PORT-0603-100K V05
ZD402	093T 64 37 N	V-PORT-0603-100K V05
ZD401	093T 64 37 N	V-PORT-0603-100K V05
ZD117	093T 64 37 N	V-PORT-0603-100K V05
ZD114	093T 64 37 N	V-PORT-0603-100K V05
ZD111	093T 64 37 N	V-PORT-0603-100K V05
ZD110	093T 64 37 N	V-PORT-0603-100K V05
ZD105	093T 64 37 N	V-PORT-0603-100K V05
ZD102	093T 64 37 N	V-PORT-0603-100K V05
ZD162	093T 64 37 N	V-PORT-0603-100K V05
ZD161	093T 64 37 N	V-PORT-0603-100K V05
ZD160	093T 64 37 N	V-PORT-0603-100K V05
ZD159	093T 64 37 N	V-PORT-0603-100K V05
ZD158	093T 64 37 N	V-PORT-0603-100K V05

ZD157	093T 64 37 N	V-PORT-0603-100K V05
ZD156	093T 64 37 N	V-PORT-0603-100K V05
ZD155	093T 64 37 N	V-PORT-0603-100K V05
ZD154	093T 64 37 N	V-PORT-0603-100K V05
ZD153	093T 64 37 N	V-PORT-0603-100K V05
ZD152	093T 64 37 N	V-PORT-0603-100K V05
ZD151	093T 64 37 N	V-PORT-0603-100K V05
D20A2	093T 6432P	LL4148 BY PANJIT
D20A1	093T 6432P	LL4148 BY PANJIT
D6A6	093T 6432P	LL4148 BY PANJIT
D6A2	093T 6432P	LL4148 BY PANJIT
D6A4	093T 6432P	LL4148 BY PANJIT
D6A5	093T 6432P	LL4148 BY PANJIT
ZD900	093T3004 2	SR34 PAN JIT
ZD901	093T3004 2	SR34 PAN JIT
	715T2486 2	MAIN BOARD PCB
	Q90T0054 1	HEAT SINK
	Q90T0054 1	HEAT SINK
	Q90T0116101 A	HEAT SINK
	IRPF7QA6	IR BOARD
CN1	033T3802 5	AUDIO IN
U1	056T 627 14 1	IC KSM-2003TN2E 37.9KHZ
R2	061T0603101	CHIP 100OHM 1/16W
R4	061T0603102	CHIP 1K OHM 1/16W
R1	061T0603102	CHIP 1K OHM 1/16W
R3	061T0603153	RST CHIPR 15 KOHM +-5% 1/10W
C4	065T0603104 32	CHIP 0.1UF 50V X7R
C3	065T0603104 32	CHIP 0.1UF 50V X7R
C5	065T0603104 32	CHIP 0.1UF 50V X7R
C1	065T0805475 15	CHIP 4.7UF 16V X5R
LED1	081T 14501 KT	LED
ZD1	093T 39S 24 T	RLZ 5.6B LLDS
	715T2471 1 2	IR BOARD PCB
	KEPF7QA9	KEY BOARD
CN21	033T8027 8 H	WAFER
SW23	077T 600 1GCJ	TACT SWITCH TSPB-2 -NP
SW22	077T 600 1GCJ	TACT SWITCH TSPB-2 -NP
SW21	077T 600 1GCJ	TACT SWITCH TSPB-2 -NP
SW25	077T 600 1GCJ	TACT SWITCH TSPB-2 -NP
SW24	077T 600 1GCJ	TACT SWITCH TSPB-2 -NP
SW26	077T 600 1GCJ	TACT SWITCH TSPB-2 -NP
SW27	077T 600 1GCJ	TACT SWITCH TSPB-2 -NP

	095T 900593	HARNESS
C23	065T0603104 32	CHIP 0.1UF 50V X7R
C22	065T0603104 32	CHIP 0.1UF 50V X7R
C21	065T0603104 32	CHIP 0.1UF 50V X7R
C20	065T0603104 32	CHIP 0.1UF 50V X7R
C26	065T0603104 32	CHIP 0.1UF 50V X7R
C25	065T0603104 32	CHIP 0.1UF 50V X7R
C24	065T0603104 32	CHIP 0.1UF 50V X7R
	715T2470 1	KEY BOARD PCB
	Q15T0120 1	IO BKT TOP(DE200)
	Q15T0122 1	PANEL-BKT-L
	Q15T0122 2	PANEL-BKT-R
	Q15T0123B08	PCB BKT(CX32+DE200)
	Q15T0125 1	BKT-HOLD-PANEL
	Q36T 600 30 2	HIMERON
	Q40T 320970 5A	RATING LABEL
	Q40T000267329A	IO LABEL
	Q41T7800970 5A	WARRANTY CARD
	Q44T3231 21 27	EVA WASHER
	Q44T3231 21 28	EVA WASHER
	Q44TJ013 1	CUSHION EPS 32
	Q44TJ013 2	CUSHION EPS 32
	Q44TJ013 3	CUSHION EPS 32
	Q44TJ013 4	CUSHION EPS 32
	Q44TJ013970 1A	CARTON
	Q44TJ013BLO001	PAPER SHEET
	Q45T 99609 2 R	EPE COVER FOR MONITOR
	Q45T 99609 39 R	EPE COVER FOR BASE
	Q52T6025 15238	MYLAR
	Q85T0041 1	SHIELD
	040T 58162435A	LABEL
	045T 76 28 C	PE BAG FOR MANUAL
	0M1T6022500	SCREW
	Q41T3201970 5A	MANUAL
	Q45T 76 28NV2 R	PE BAG FOR CLAMP

12. Different Parts List

Diversity of E327AZNSBWH5NN compared with E327AZNSBWH2NN		
Location	**Part No.**	**Description**
	095T801414WH25	WIRE HARNESS 14P-12P 100MM
	095T8018 3D673	LVDS CABLE 36P-30P 250MM
	0Q1T 930 8120	SCREW
	0Q1T 940 10120	SCREW
	750TVUN0W2D11N	PANEL T315XW02 VD00 TW AUO
	CBPF7Z4KQD	MAIN BOARD
R900	061T0603104	CHIP 100K OHM 1/16W
R950	061T0603472	CHIP 4.7KOHM 1/16W
FB910	061T1206000	RST CHIPR 0 OHM +-5% 1/4W
C4K6	065T0603102 32	CHIP 1000PF 50V X7R
C900	065T0603474 27	CHIP 0.47UF 25V Y5V