TL431, A, B Series, NCV431A

Programmable Precision References

The TL431, A, B integrated circuits are three−terminal programmable shunt regulator diodes. These monolithic IC voltage references operate as a low temperature coefficient zener which is programmable from V_{ref} to 36 V with two external resistors. These devices exhibit a wide operating current range of 1.0 mA to 100 mA with a typical dynamic impedance of 0.22 Ω. The characteristics of these references make them excellent replacements for zener diodes in many applications such as digital voltmeters, power supplies, and op amp circuitry. The 2.5 V reference makes it convenient to obtain a stable reference from 5.0 V logic supplies, and since the TL431, A, B operates as a shunt regulator, it can be used as either a positive or negative voltage reference.

Features

- Programmable Output Voltage to 36 V
- Voltage Reference Tolerance: ±0.4%, Typ @ 25°C (TL431B)
- Low Dynamic Output Impedance, 0.22 Ω Typical
- Sink Current Capability of 1.0 mA to 100 mA
- Equivalent Full−Range Temperature Coefficient of 50 ppm/°C Typical
- Temperature Compensated for Operation over Full Rated Operating Temperature Range
- Low Output Noise Voltage
- Pb−Free Packages are Available

Datasheet.Live

ON Semiconductor®

http://onsemi.com

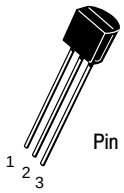

TO−92 (TO−226)
LP SUFFIX
CASE 29

Pin 1. Reference
2. Anode
3. Cathode

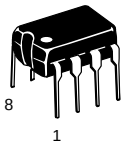

PDIP−8
P SUFFIX
CASE 626

Micro8™
DM SUFFIX
CASE 846A

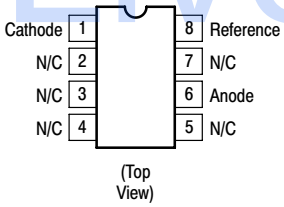

SOIC−8
D SUFFIX
CASE 751

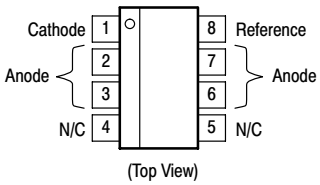

This is an internally modified SOIC−8 package. Pins 2, 3, 6 and 7 are electrically common to the die attach flag. This internal lead frame modification increases power dissipation capability when appropriately mounted on a printed circuit board. This modified package conforms to all external dimensions of the standard SOIC−8 package.

ORDERING INFORMATION

See detailed ordering and shipping information in the package dimensions section on page 13 of this data sheet.

DEVICE MARKING INFORMATION

See general marking information in the device marking section on page 15 of this data sheet.

© Semiconductor Components Industries, LLC, 2004

Symbol

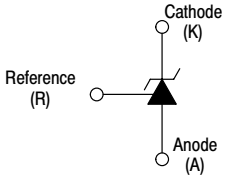

Representative Block Diagram

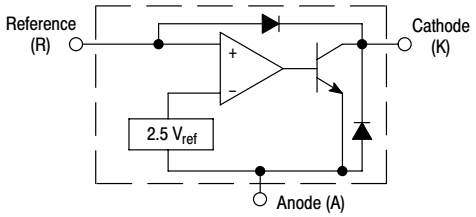

Representative Schematic Diagram
Component values are nominal

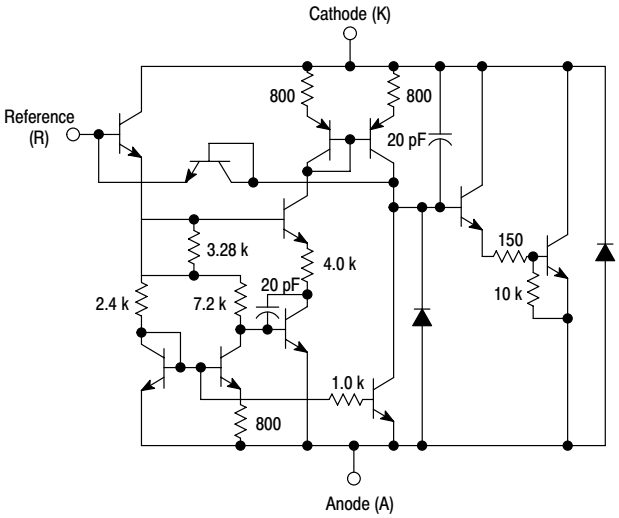

This device contains 12 active transistors.

MAXIMUM RATINGS (Full operating ambient temperature range applies, unless otherwise noted.)

Rating	Symbol	Value	Unit
Cathode to Anode Voltage	V_{KA}	37	V
Cathode Current Range, Continuous	I_K	−100 to +150	mA
Reference Input Current Range, Continuous	I_{ref}	−0.05 to +10	mA
Operating Junction Temperature	T_J	150	°C
Operating Ambient Temperature Range TL431I, TL431AI, TL431BI TL431C, TL431AC, TL431BC NCV431AI, TL431BV	T_A	 −40 to +85 0 to +70 −40 to +125	°C
Storage Temperature Range	T_{stg}	−65 to +150	°C
Total Power Dissipation @ T_A = 25°C Derate above 25°C Ambient Temperature D, LP Suffix Plastic Package P Suffix Plastic Package DM Suffix Plastic Package	P_D	 0.70 1.10 0.52	W
Total Power Dissipation @ T_C = 25°C Derate above 25°C Case Temperature D, LP Suffix Plastic Package P Suffix Plastic Package	P_D	 1.5 3.0	W

NOTE: ESD data available upon request.

RECOMMENDED OPERATING CONDITIONS

Condition	Symbol	Min	Max	Unit
Cathode to Anode Voltage	V_{KA}	V_{ref}	36	V
Cathode Current	I_K	1.0	100	mA

THERMAL CHARACTERISTICS

Characteristic	Symbol	D, LP Suffix Package	P Suffix Package	DM Suffix Package	Unit
Thermal Resistance, Junction−to−Ambient	$R_{\theta JA}$	178	114	240	°C/W
Thermal Resistance, Junction−to−Case	$R_{\theta JC}$	83	41	−	°C/W

ELECTRICAL CHARACTERISTICS (T_A = 25°C, unless otherwise noted.)

Characteristic	Symbol	TL431I			TL431C			Unit
		Min	Typ	Max	Min	Typ	Max	
Reference Input Voltage (Figure 1) $V_{KA} = V_{ref}$, I_K = 10 mA T_A = 25°C $T_A = T_{low}$ to T_{high} (Note 1)	V_{ref}	 2.44 2.41	 2.495 –	 2.55 2.58	 2.44 2.423	 2.495 –	 2.55 2.567	V
High Logic Level Supply Current from V_{CC}	I_{CCH}	60	–	45	60	mA	mA	mA
Reference Input Voltage Deviation Over Temperature Range (Figure 1, Notes 1, 2) $V_{KA} = V_{ref}$, I_K = 10 mA	ΔV_{ref}	–	7.0	30	–	3.0	17	mV
Ratio of Change in Reference Input Voltage to Change in Cathode to Anode Voltage I_K = 10 mA (Figure 2), ΔV_{KA} = 10 V to V_{ref} ΔV_{KA} = 36 V to 10 V	$\frac{\Delta V_{ref}}{\Delta V_{KA}}$	 – –	 −1.4 −1.0	 −2.7 −2.0	 – –	 −1.4 −1.0	 −2.7 −2.0	mV/V
Reference Input Current (Figure 2) I_K = 10 mA, R1 = 10 k, R2 = ∞ T_A = 25°C $T_A = T_{low}$ to T_{high} (Note 1)	I_{ref}	 – –	 1.8 –	 4.0 6.5	 – –	 1.8 –	 4.0 5.2	μA
Reference Input Current Deviation Over Temperature Range (Figure 2, Note 1, 4) I_K = 10 mA, R1 = 10 k, R2 = ∞	ΔI_{ref}	–	0.8	2.5	–	0.4	1.2	μA
Minimum Cathode Current For Regulation $V_{KA} = V_{ref}$ (Figure 1)	I_{min}	–	0.5	1.0	–	0.5	1.0	mA
Off−State Cathode Current (Figure 3) V_{KA} = 36 V, V_{ref} = 0 V	I_{off}	–	20	1000	–	20	1000	nA
Dynamic Impedance (Figure 1, Note 3) $V_{KA} = V_{ref}$, ΔI_K = 1.0 mA to 100 mA f ≤ 1.0 kHz	$\lvert Z_{KA}\rvert$	–	0.22	0.5	–	0.22	0.5	Ω

1. T_{low} = −40°C for TL431AIP TL431AILP, TL431IP, TL431ILP, TL431BID, TL431BIP, TL431BILP, TL431AIDM, TL431IDM, TL431BIDM;
   = 0°C for TL431ACP, TL431ACLP, TL431CP, TL431CLP, TL431CD, TL431ACD, TL431BCD, TL431BCP, TL431BCLP, TL431CDM, TL431ACDM, TL431BCDM
   T_{high} = +85°C for TL431AIP, TL431AILP, TL431IP, TL431ILP, TL431BID, TL431BIP, TL431BILP, TL431IDM, TL431AIDM, TL431BIDM
   = +70°C for TL431ACP, TL431ACLP, TL431CP, TL431ACD, TL431BCD, TL431BCP, TL431BCLP, TL431CDM, TL431ACDM, TL431BCDM
2. The deviation parameter ΔV_{ref} is defined as the difference between the maximum and minimum values obtained over the full operating ambient temperature range that applies.

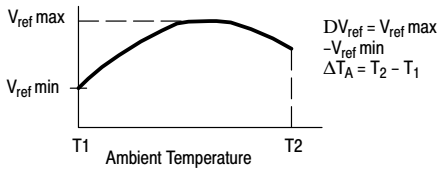

The average temperature coefficient of the reference input voltage, αV_{ref} is defined as:

$$V_{ref}\ \frac{ppm}{°C} = \frac{\left(\frac{\Delta V_{ref}}{V_{ref}\ @\ 25°C}\right) X\ 10^6}{\Delta T_A} = \frac{\Delta V_{ref}\ x\ 10^6}{\Delta T_A\ (V_{ref}\ @\ 25°C)}$$

αV_{ref} can be positive or negative depending on whether V_{ref} Min or V_{ref} Max occurs at the lower ambient temperature. (Refer to Figure 6.)

Example : ΔV_{ref} = 8.0 mV and slope is positive,
V_{ref} @ 25°C = 2.495 V, ΔT_A = 70°C

$$\alpha\ V_{ref} = \frac{0.008\ x\ 10^6}{70\ (2.495)} = 45.8\ ppm/°C$$

3. The dynamic impedance Z_{KA} is defined as: $\lvert Z_{KA}\rvert = \frac{\Delta V_{KA}}{\Delta I_K}$. When the device is programmed with two external resistors, R1 and R2, (refer to Figure 2) the total dynamic impedance of the circuit is defined as: $\lvert Z_{KA}'\rvert \approx \lvert Z_{KA}\rvert \left(1 + \frac{R1}{R2}\right)$

ELECTRICAL CHARACTERISTICS (T_A = 25°C, unless otherwise noted.)

Characteristic	Symbol	TL431AI / NCV431AI			TL431AC			TL431BI			Unit
		Min	Typ	Max	Min	Typ	Max	Min	Typ	Max	
Reference Input Voltage (Figure 1) $V_{KA} = V_{ref}$, I_K = 10 mA T_A = 25°C $T_A = T_{low}$ to T_{high}	V_{ref}	 2.47 2.44	 2.495 –	 2.52 2.55	 2.47 2.453	 2.495 –	 2.52 2.537	 2.483 2.475	 2.495 2.495	 2.507 2.515	V
Reference Input Voltage Deviation Over Temperature Range (Figure 1, Notes 4, 5) $V_{KA} = V_{ref}$, I_K = 10 mA	ΔV_{ref}	–	7.0	30	–	3.0	17	–	3.0	17	mV
Ratio of Change in Reference Input Voltage to Change in Cathode to Anode Voltage I_K = 10 mA (Figure 2), ΔV_{KA} = 10 V to V_{ref} ΔV_{KA} = 36 V to 10 V	$\frac{\Delta V_{ref}}{\Delta V_{KA}}$	 – –	 −1.4 −1.0	 −2.7 −2.0	 – –	 −1.4 −1.0	 −2.7 −2.0	 – –	 −1.4 −1.0	 −2.7 −2.0	mV/V
Reference Input Current (Figure 2) I_K = 10 mA, R1 = 10 k, R2 = ∞ T_A = 25°C $T_A = T_{low}$ to T_{high} (Note 4)	I_{ref}	 – –	 1.8 –	 4.0 6.5	 – –	 1.8 –	 4.0 5.2	 – –	 1.1 –	 2.0 4.0	μA
Reference Input Current Deviation Over Temperature Range (Figure 2, Note 4) I_K = 10 mA, R1 = 10 k, R2 = ∞	ΔI_{ref}	–	0.8	2.5	–	0.4	1.2	–	0.8	2.5	μA
Minimum Cathode Current For Regulation $V_{KA} = V_{ref}$ (Figure 1)	I_{min}	–	0.5	1.0	–	0.5	1.0	–	0.5	1.0	mA
Off−State Cathode Current (Figure 3) V_{KA} = 36 V, V_{ref} = 0 V	I_{off}	–	20	1000	–	20	1000	–	0.23	500	nA
Dynamic Impedance (Figure 1, Note 6) $V_{KA} = V_{ref}$, ΔI_K = 1.0 mA to 100 mA f ≤ 1.0 kHz	$\lvert Z_{KA}\rvert$	–	0.22	0.5	–	0.22	0.5	–	0.14	0.3	Ω

4. T_{low} = −40°C for TL431AIP TL431AILP, TL431IP, TL431ILP, TL431BID, TL431BIP, TL431BILP, TL431BV, TL431AIDM, TL431IDM, TL431BIDM, NCV431AIDMR2, NCV431AIDR2
   = 0°C for TL431ACP, TL431ACLP, TL431CP, TL431CLP, TL431CD, TL431ACD, TL431BCD, TL431BCP, TL431BCLP, TL431CDM, TL431ACDM, TL431BCDM
   T_{high} = +85°C for TL431AIP, TL431AILP, TL431IP, TL431ILP, TL431BID, TL431BIP, TL431BILP, TL431IDM, TL431AIDM, TL431BIDM
   = +70°C for TL431ACP, TL431ACLP, TL431CP, TL431ACD, TL431BCD, TL431BCP, TL431BCLP, TL431CDM, TL431ACDM, TL431BCDM
   = +125°C TL431BV, NCV431AIDMR2, NCV431AIDR2
5. The deviation parameter ΔV_{ref} is defined as the difference between the maximum and minimum values obtained over the full operating ambient temperature range that applies.

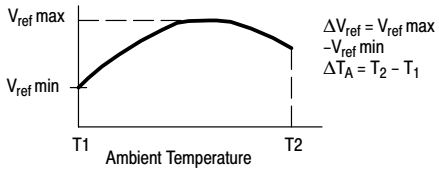

The average temperature coefficient of the reference input voltage, αV_{ref} is defined as:

$$V_{ref}\ \frac{ppm}{°C} = \frac{\left(\frac{\Delta V_{ref}}{V_{ref}\ @\ 25°C}\right) X\ 10^6}{\Delta T_A} = \frac{\Delta V_{ref} \times 10^6}{\Delta T_A\ (V_{ref}\ @\ 25°C)}$$

αV_{ref} can be positive or negative depending on whether V_{ref} Min or V_{ref} Max occurs at the lower ambient temperature. (Refer to Figure 6.)

Example : ΔV_{ref} = 8.0 mV and slope is positive,

V_{ref} @ 25°C = 2.495 V, ΔT_A = 70°C

$$\alpha V_{ref} = \frac{0.008 \times 10^6}{70\ (2.495)} = 45.8\ ppm/°C$$

6. The dynamic impedance Z_{KA} is defined as $\lvert Z_{KA}\rvert = \frac{\Delta V_{KA}}{\Delta I_K}$ When the device is programmed with two external resistors, R1 and R2, (refer to Figure 2) the total dynamic impedance of the circuit is defined as: $\lvert Z_{KA}'\rvert \approx \lvert Z_{KA}\rvert \left(1 + \frac{R1}{R2}\right)$
7. NCV431AIDMR2, NCV431AIDR2 T_{low} = −40°C, T_{high} = +125°C. Guaranteed by design. NCV prefix is for automotive and other applications requiring site and change control.

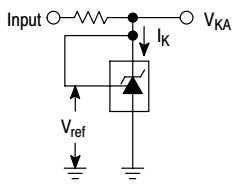

Figure 1. Test Circuit for $V_{KA} = V_{ref}$

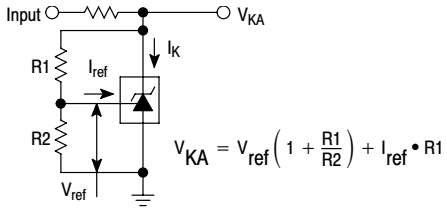

Figure 2. Test Circuit for $V_{KA} > V_{ref}$

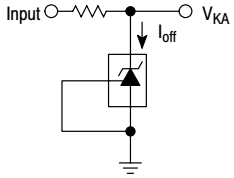

Figure 3. Test Circuit for I_{off}

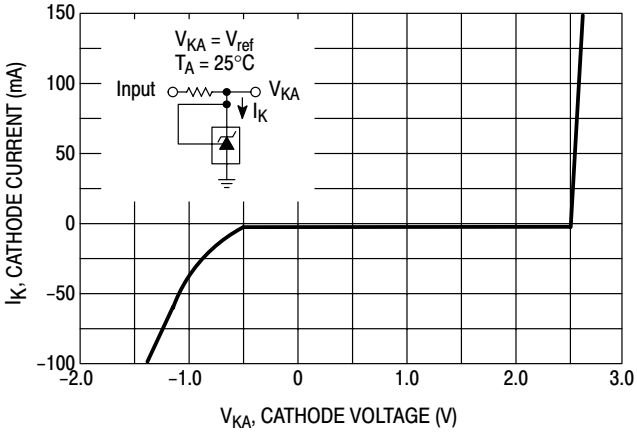

Figure 4. Cathode Current versus Cathode Voltage

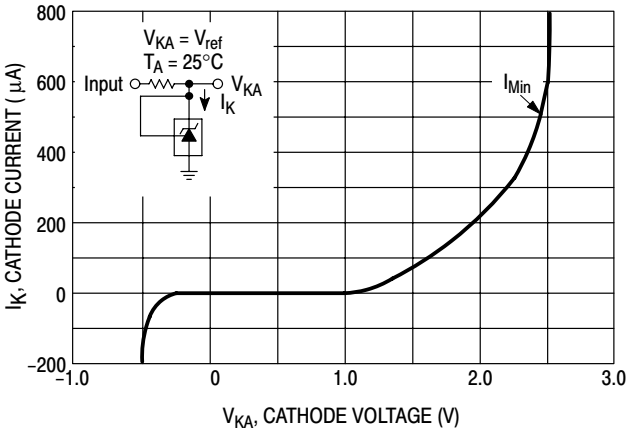

Figure 5. Cathode Current versus Cathode Voltage

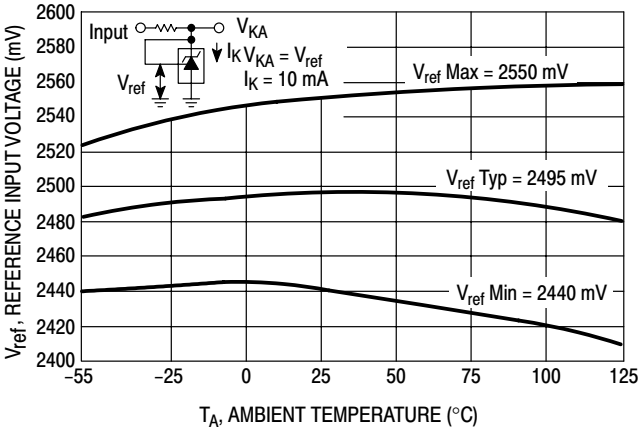

Figure 6. Reference Input Voltage versus Ambient Temperature

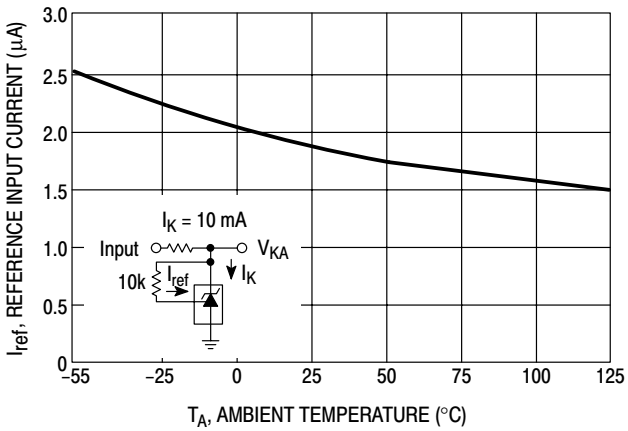

Figure 7. Reference Input Current versus Ambient Temperature

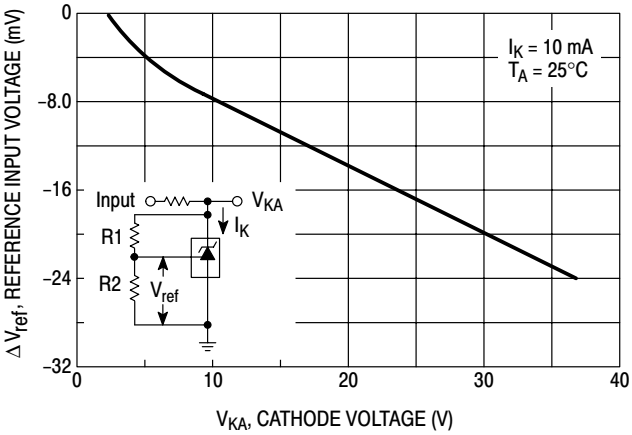

Figure 8. Change in Reference Input Voltage versus Cathode Voltage

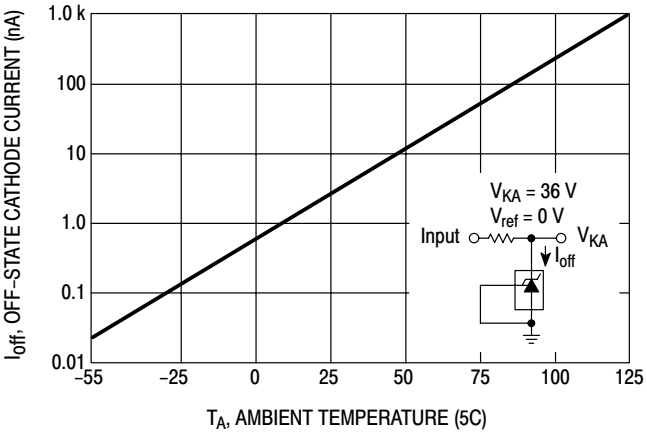

Figure 9. Off−State Cathode Current versus Ambient Temperature

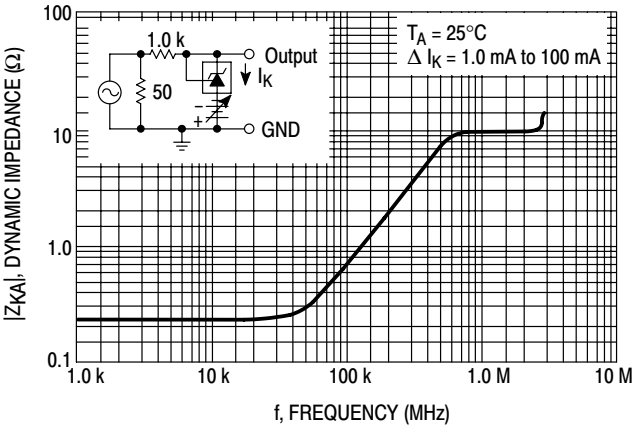

Figure 10. Dynamic Impedance versus Frequency

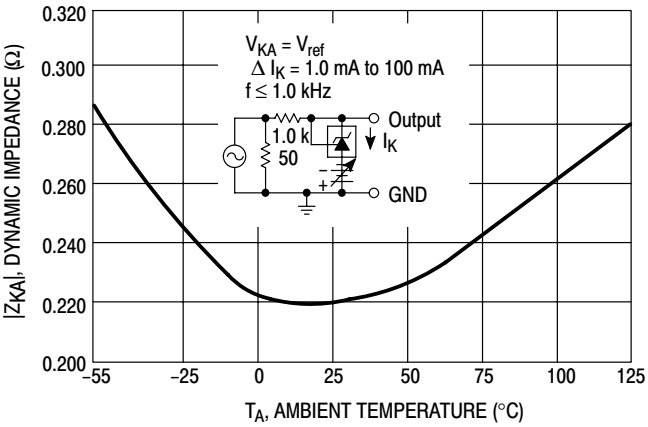

Figure 11. Dynamic Impedance versus Ambient Temperature

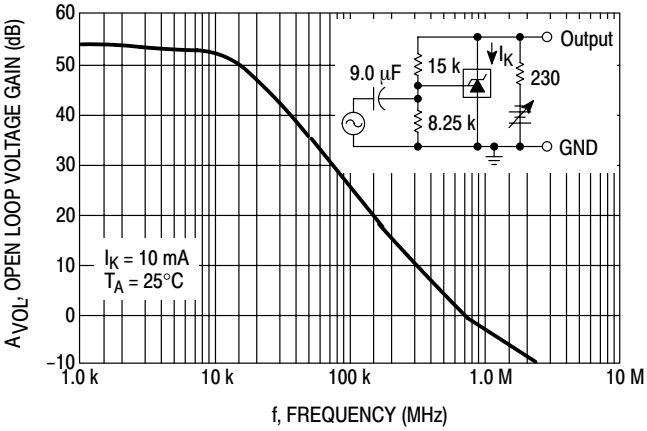

Figure 12. Open−Loop Voltage Gain versus Frequency

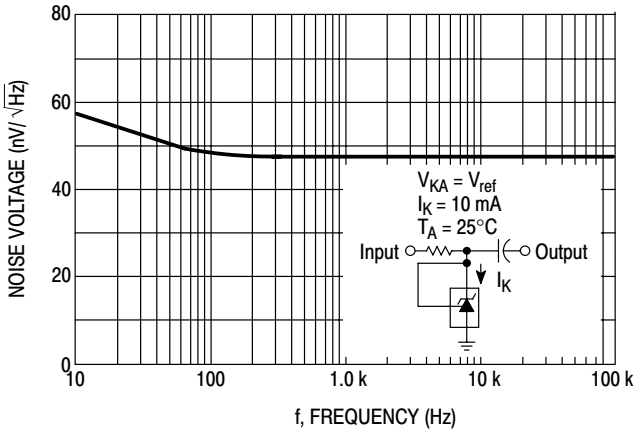

Figure 13. Spectral Noise Density

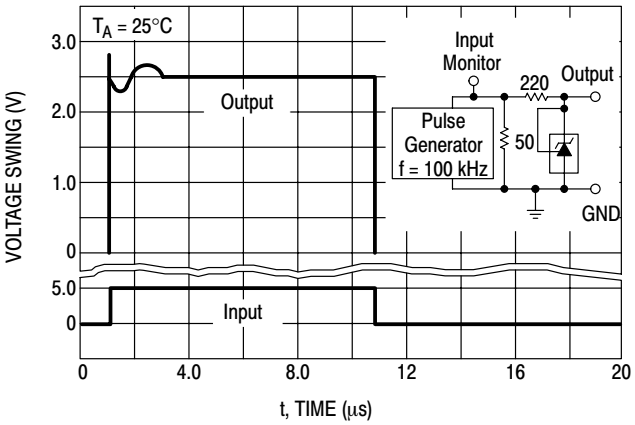

Figure 14. Pulse Response

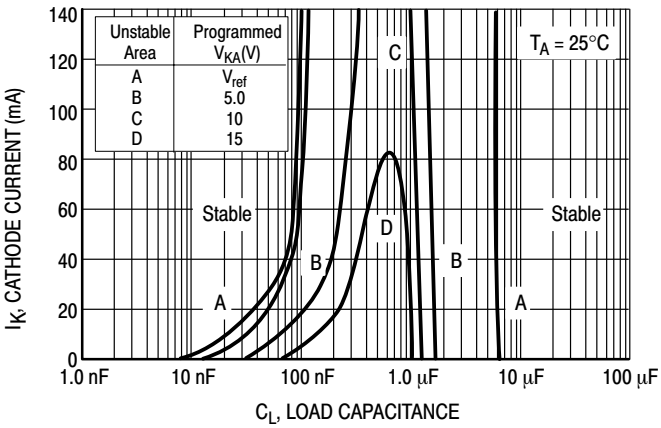

Figure 15. Stability Boundary Conditions

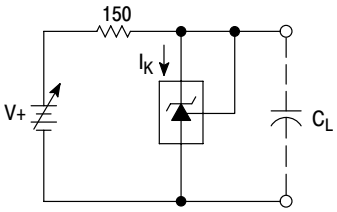

Figure 16. Test Circuit For Curve A of Stability Boundary Conditions

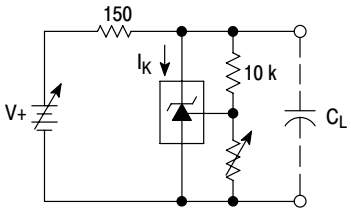

Figure 17. Test Circuit For Curves B, C, And D of Stability Boundary Conditions

TYPICAL APPLICATIONS

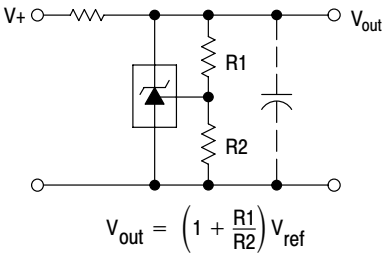

Figure 18. Shunt Regulator

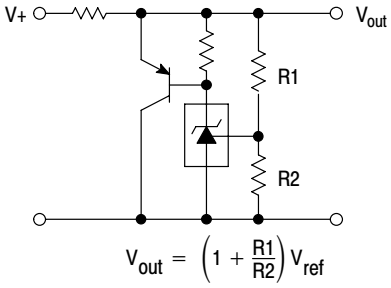

Figure 19. High Current Shunt Regulator

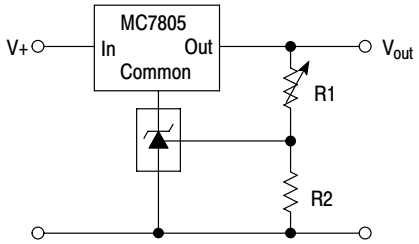

$$V_{out} = \left(1 + \frac{R1}{R2}\right) V_{ref}$$

$$V_{out\ min} = V_{ref} + 5.0V$$

Figure 20. Output Control for a Three−Terminal Fixed Regulator

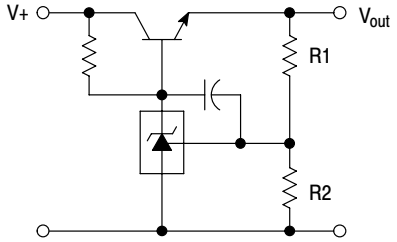

$$V_{out} = \left(1 + \frac{R1}{R2}\right) V_{ref}$$

$$V_{out\ min} = V_{ref} + V_{be}$$

Figure 21. Series Pass Regulator

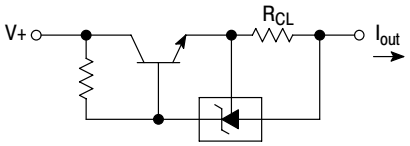

$$I_{out} = \frac{V_{ref}}{R_{CL}}$$

Figure 22. Constant Current Source

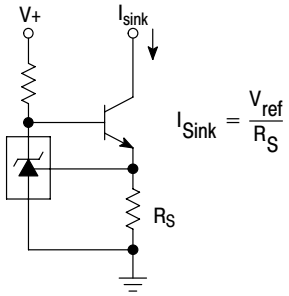

$$I_{Sink} = \frac{V_{ref}}{R_S}$$

Figure 23. Constant Current Sink

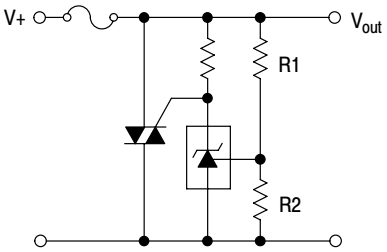

$$V_{out(trip)} = \left(1 + \frac{R1}{R2}\right) V_{ref}$$

Figure 24. TRIAC Crowbar

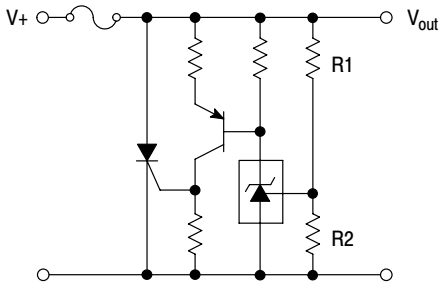

$$V_{out(trip)} = \left(1 + \frac{R1}{R2}\right) V_{ref}$$

Figure 25. SRC Crowbar

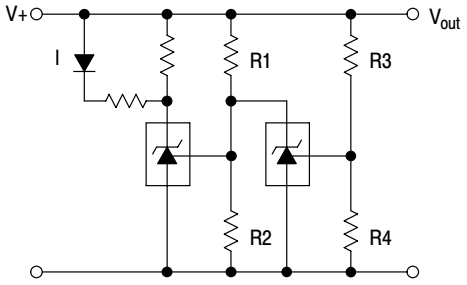

L.E.D. indicator is ‘on’ when V+ is between the upper and lower limits.

$$\text{Lower Limit} = \left(1 + \frac{R1}{R2}\right) V_{ref}$$

$$\text{Upper Limit} = \left(1 + \frac{R3}{R4}\right) V_{ref}$$

Figure 26. Voltage Monitor

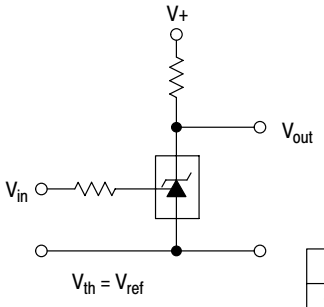

V_{in}	V_{out}
$< V_{ref}$	V+
$> V_{ref}$	≈ 2.0 V

Figure 27. Single−Supply Comparator with Temperature−Compensated Threshold

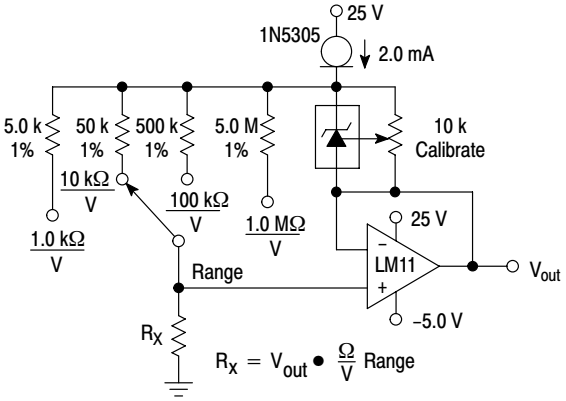

Figure 28. Linear Ohmmeter

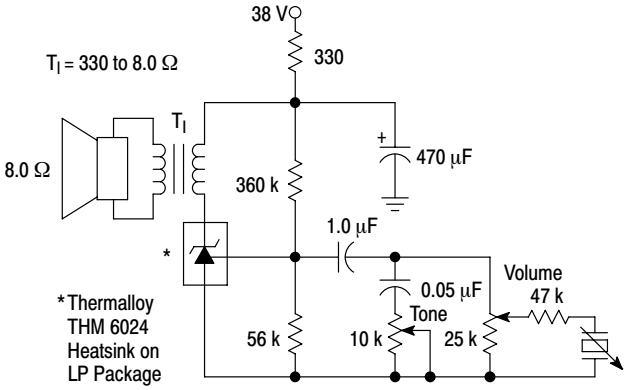

Figure 29. Simple 400 mW Phono Amplifier

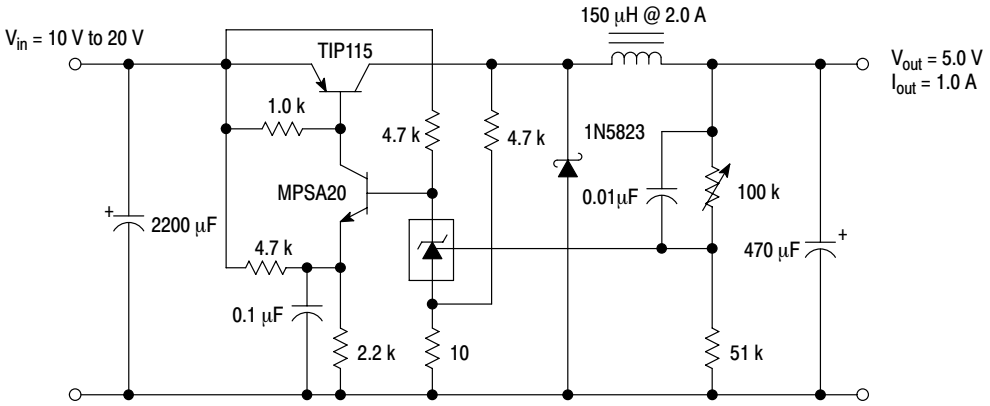

Figure 30. High Efficiency Step−Down Switching Converter

Test	Conditions	Results
Line Regulation	V_{in} = 10 V to 20 V, I_o = 1.0 A	53 mV (1.1%)
Load Regulation	V_{in} = 15 V, I_o = 0 A to 1.0 A	25 mV (0.5%)
Output Ripple	V_{in} = 10 V, I_o = 1.0 A	50 mVpp P.A.R.D.
Output Ripple	V_{in} = 20 V, I_o = 1.0 A	100 mVpp P.A.R.D.
Efficiency	V_{in} = 15 V, I_o = 1.0 A	82%

APPLICATIONS INFORMATION

The TL431 is a programmable precision reference which is used in a variety of ways. It serves as a reference voltage in circuits where a non−standard reference voltage is needed. Other uses include feedback control for driving an optocoupler in power supplies, voltage monitor, constant current source, constant current sink and series pass regulator. In each of these applications, it is critical to maintain stability of the device at various operating currents and load capacitances. In some cases the circuit designer can estimate the stabilization capacitance from the stability boundary conditions curve provided in Figure 15. However, these typical curves only provide stability information at specific cathode voltages and at a specific load condition. Additional information is needed to determine the capacitance needed to optimize phase margin or allow for process variation.

A simplified model of the TL431 is shown in Figure 31. When tested for stability boundaries, the load resistance is 150 Ω. The model reference input consists of an input transistor and a dc emitter resistance connected to the device anode. A dependent current source, Gm, develops a current whose amplitude is determined by the difference between the 1.78 V internal reference voltage source and the input transistor emitter voltage. A portion of Gm flows through compensation capacitance, C_{P2}. The voltage across C_{P2} drives the output dependent current source, Go, which is connected across the device cathode and anode.

Model component values are:
V_{ref} = 1.78 V
Gm = 0.3 + 2.7 exp (−I_C/26 mA)
where I_C is the device cathode current and Gm is in mhos

Go = 1.25 (V_{cp}2) μmhos.

Resistor and capacitor typical values are shown on the model. Process tolerances are ±20% for resistors, ±10% for capacitors, and ±40% for transconductances.

An examination of the device model reveals the location of circuit poles and zeroes:

$$P1 = \frac{1}{2\pi R_{GM} C_{P1}} = \frac{1}{2\pi * 1.0\ M * 20\ pF} = 7.96\ kHz$$

$$P2 = \frac{1}{2\pi R_{P2} C_{P2}} = \frac{1}{2\pi * 10\ M * 0.265\ pF} = 60\ kHz$$

$$Z1 = \frac{1}{2\pi R_{Z1} C_{P1}} = \frac{1}{2\pi * 15.9\ k * 20\ pF} = 500\ kHz$$

In addition, there is an external circuit pole defined by the load:

$$P_L = \frac{1}{2\pi R_L C_L}$$

Also, the transfer dc voltage gain of the TL431 is:

$$G = G_M R_{GM} Go R_L$$

Example 1:

$I_C = 10\,mA, R_L = 230\ \Omega, C_L = 0$. Define the transfer gain.

The DC gain is:

$$G = G_M R_{GM} Go R_L =$$
$$(2.138)(1.0\ M)(1.25\ \mu)(230) = 615 = 56\ dB$$

$$\text{Loop gain} = G\ \frac{8.25\ k}{8.25\ k + 15\ k} = 218 = 47\ dB$$

The resulting transfer function Bode plot is shown in Figure 32. The asymptotic plot may be expressed as the following equation:

$$Av = 615\ \frac{\left(\frac{1 + jf}{500\ kHz}\right)}{\left(\frac{1 + jf}{8.0\ kHz}\right)\left(\frac{1 + jf}{60\ kHz}\right)}$$

The Bode plot shows a unity gain crossover frequency of approximately 600 kHz. The phase margin, calculated from the equation, would be 55.9 degrees. This model matches the Open−Loop Bode Plot of Figure 12. The total loop would have a unity gain frequency of about 300 kHz with a phase margin of about 44 degrees.

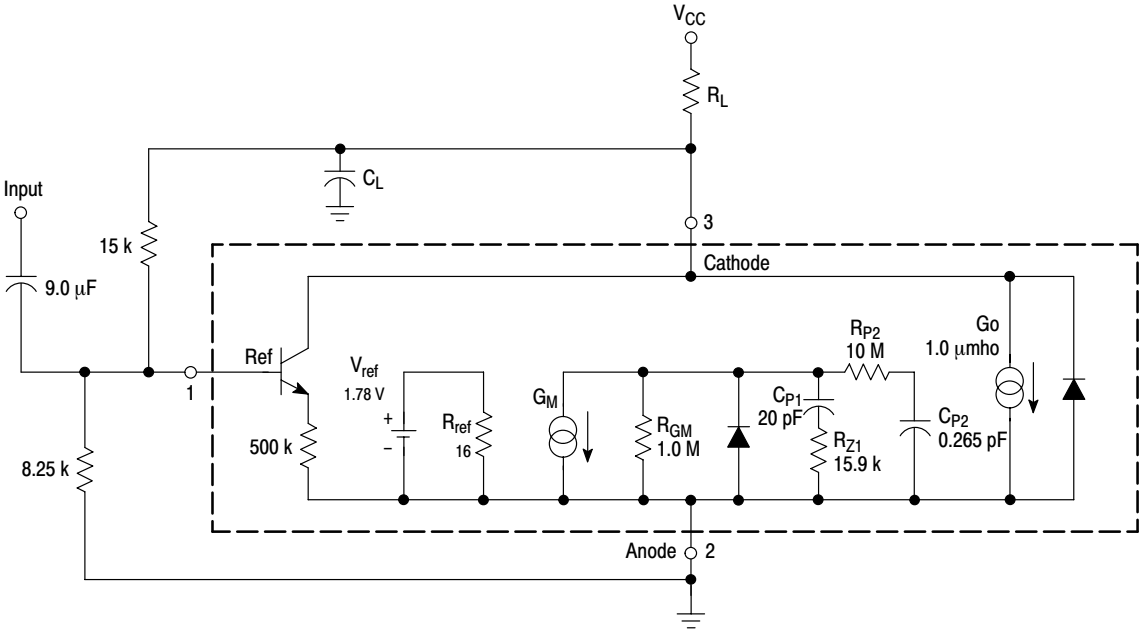

Figure 31. Simplified TL431 Device Model

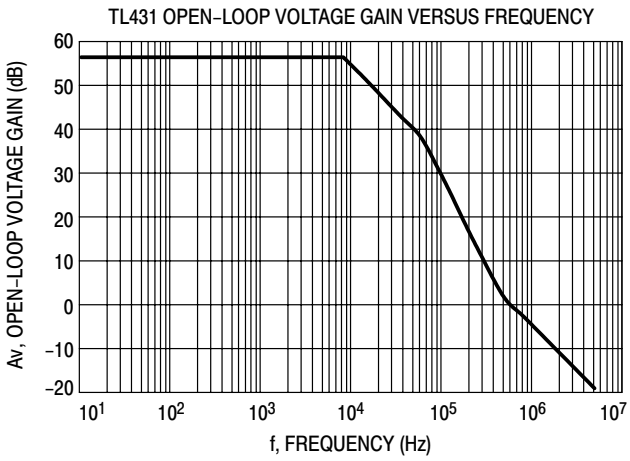

Figure 32. Example 1 Circuit Open Loop Gain Plot

Example 2.

I_C = 7.5 mA, R_L = 2.2 kΩ, C_L = 0.01 μF. Cathode tied to reference input pin. An examination of the data sheet stability boundary curve (Figure 15) shows that this value of load capacitance and cathode current is on the boundary. Define the transfer gain.

The DC gain is:

$$G = G_M R_{GM} G_o R_L =$$

$$(2.323)(1.0\ M)(1.25\ \mu)(2200) = 6389 = 76\ dB$$

The resulting open loop Bode plot is shown in Figure 33. The asymptotic plot may be expressed as the following equation:

$$Av = 615\ \frac{\left(\frac{1 + jf}{500\ kHz}\right)}{\left(\frac{1 + jf}{8.0\ kHz}\right)\left(\frac{1 + jf}{60\ kHz}\right)\left(\frac{1 + jf}{7.2\ kHz}\right)}$$

Note that the transfer function now has an extra pole formed by the load capacitance and load resistance.

Note that the crossover frequency in this case is about 250 kHz, having a phase margin of about −46 degrees. Therefore, instability of this circuit is likely.

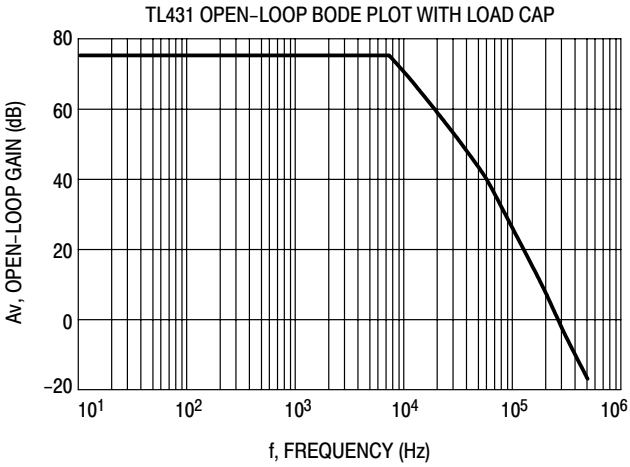

Figure 33. Example 2 Circuit Open Loop Gain Plot

With three poles, this system is unstable. The only hope for stabilizing this circuit is to add a zero. However, that can only be done by adding a series resistance to the output capacitance, which will reduce its effectiveness as a noise filter. Therefore, practically, in reference voltage applications, the best solution appears to be to use a smaller value of capacitance in low noise applications or a very large value to provide noise filtering and a dominant pole rolloff of the system.

ORDERING INFORMATION

Device	Operating Temperature Range	Package Code	Shipping Information†	Tolerance
TL431ACD	0°C to 70°C	SOIC−8	98 Units / Rail	1.0%
TL431BCD				0.4%
TL431CD				2.2%
TL431ACDR2			2500 Units / Tape & Reel	1.0%
TL431ACDR2G		SOIC−8 (Pb−Free)		1.0%
TL431BCDR2		SOIC−8		0.4%
TL431BCDR2G		SOIC−8 (Pb−Free)		0.4%
TL431CDR2		SOIC−8		2.2%
TL431CDR2G		SOIC−8 (Pb−Free)		2.2%
TL431ACDMR2		Micro8	4000 Units / Tape & Reel	1.0%
TL431BCDMR2				0.4%
TL431CDMR2				2.2%
TL431CDMR2G		Micro8 (Pb−Free)		2.2%
TL431ACP		PDIP−8	50 Units / Rail	1.0%
TL431BCP				0.4%
TL431CP				2.2%
TL431ACLP		TO−92 (TO−226)	2000 Units / Bag	1.0%
TL431ACLPG		TO−92 (TO−226) (Pb−Free)		1.0%
TL431BCLP		TO−92 (TO−226)		0.4%
TL431BCLPG		TO−92 (TO−226) (Pb−Free)		
TL431CLP		TO−92 (TO−226)		2.2%
TL431CLPG		TO−92 (TO−226) (Pb−Free)		2.2%
TL431ACLPRA		TO−92 (TO−226)	2000 Units / Tape & Reel	1.0%
TL431ACLPRAG		TO−92 (TO−226) (Pb−Free)		1.0%
TL431BCLPRA		TO−92 (TO−226)		0.4%
TL431BCLPRAG		TO−92 (TO−226) (Pb−Free)		0.4%
TL431CLPRA		TO−92 (TO−226)		2.2%
TL431CLPRAG		TO−92 (TO−226) (Pb−Free)		2.2%
TL431ACLPRE		TO−92 (TO−226)		1.0%
TL431ACLPREG		TO−92 (TO−226) (Pb−Free)		1.0%
TL431BCLPRE		TO−92 (TO−226)		0.4%
TL431BCLPREG		TO−92 (TO−226) (Pb−Free)		0.4%
TL431ACLPRP		TO−92 (TO−226)	2000 Units / Fan−Fold	1.0%
TL431ACLPRPG		TO−92 (TO−226) (Pb−Free)		1.0%
TL431BCLPRM		TO−92 (TO−226)		0.4%
TL431BCLPRMG		TO−92 (TO−226) (Pb−Free)		0.4%

†For information on tape and reel specifications, including part orientation and tape sizes, please refer to our Tape and Reel Packaging Specifications Brochure, BRD8011/D.

ORDERING INFORMATION

Device	Operating Temperature Range	Package Code	Shipping Information†	Tolerance
TL431CLPRP	0°C to 70°C	TO−92 (TO−226)	2000 Units / Fan−Fold	2.2%
TL431CLPRPG		TO−92 (TO−226) (Pb−Free)		2.2%
TL431AID	−40°C to 85°C	SOIC−8	98 Units / Rail	1.0%
TL431BID				0.4%
TL431BIDG		SOIC−8 (Pb−Free)		0.4%
TL431ID		SOIC−8		2.2%
TL431AIDR2			2500 Units / Tape & Reel	1.0%
TL431AIDR2G		SOIC−8 (Pb−Free)		1.0%
TL431BIDR2		SOIC−8		0.4%
TL431IDR2				2.2%
TL431AIDMR2		Micro8	4000 Units / Tape & Reel	1.0%
TL431BIDMR2				0.4%
TL431IDMR2				2.2%
TL431AIP		PDIP−8	50 Units / Rail	1.0%
TL431BIP				0.4%
TL431IP				2.2%
TL431AILP		TO−92 (TO−226)	2000 Units / Box	1.0%
TL431BILP				0.4%
TL431ILP				2.2%
TL431ILPG		TO−92 (TO−226) (Pb−Free)		2.2%
TL431AILPRA		TO−92 (TO−226)	2000 Units / Tape & Reel	1.0%
TL431BILPRA				0.4%
TL431ILPRA				2.2%
TL431AILPRM			2000 Units / Ammo Pack	1.0%
TL431AILPRP				1.0%
TL431ILPRP				2.2%
TL431BVD	−40°C to 125°C	SOIC−8	98 Units / Rail	0.4%
TL431BVDR2		SOIC−8		0.4%
TL431BVDMR2		Micro8	4000 Units / Tape & Reel	0.4%
TL431BVLP		TO−92 (TO−226)	2000 Units / Box	0.4%
TL431BVP		PDIP−8	50 Units / Rail	0.4%
NCV431AIDMR2		Micro8	4000 Units / Tape & Reel	1%
NCV431AIDR2		SOIC−8	2500 Units / Tape & Reel	1%

†For information on tape and reel specifications, including part orientation and tape sizes, please refer to our Tape and Reel Packaging Specifications Brochure, BRD8011/D.

MARKING DIAGRAMS

SOIC−8
D SUFFIX
CASE 751

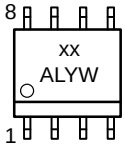

Micro8
CASE 846A

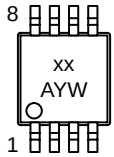

PDIP−8
CASE 626

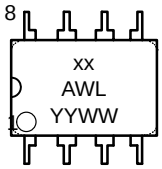

TO−92 (TO−226)
CASE 29

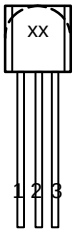

xx	= Specific Device Code
A	= Assembly Location
WL, L	= Wafer Lot
YY, Y	= Year
WW, W	= Work Week

PACKAGE DIMENSIONS

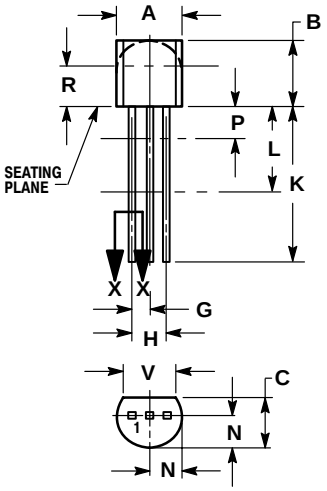

TO−92 (TO−226)
LP SUFFIX
PLASTIC PACKAGE
CASE 29−11
ISSUE AL

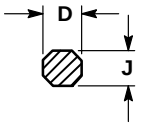

SECTION X−X

NOTES:
1. DIMENSIONING AND TOLERANCING PER ANSI Y14.5M, 1982.
2. CONTROLLING DIMENSION: INCH.
3. CONTOUR OF PACKAGE BEYOND DIMENSION R IS UNCONTROLLED.
4. LEAD DIMENSION IS UNCONTROLLED IN P AND BEYOND DIMENSION K MINIMUM.

	INCHES		MILLIMETERS	
DIM	MIN	MAX	MIN	MAX
A	0.175	0.205	4.45	5.20
B	0.170	0.210	4.32	5.33
C	0.125	0.165	3.18	4.19
D	0.016	0.021	0.407	0.533
G	0.045	0.055	1.15	1.39
H	0.095	0.105	2.42	2.66
J	0.015	0.020	0.39	0.50
K	0.500	---	12.70	---
L	0.250	---	6.35	---
N	0.080	0.105	2.04	2.66
P	---	0.100	---	2.54
R	0.115	---	2.93	---
V	0.135	---	3.43	---

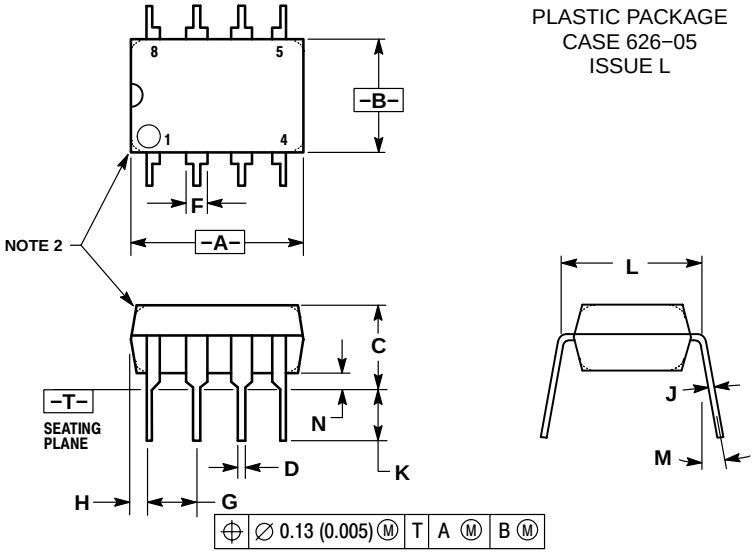

PDIP−8
P SUFFIX
PLASTIC PACKAGE
CASE 626−05
ISSUE L

NOTES:
1. DIMENSION L TO CENTER OF LEAD WHEN FORMED PARALLEL.
2. PACKAGE CONTOUR OPTIONAL (ROUND OR SQUARE CORNERS).
3. DIMENSIONING AND TOLERANCING PER ANSI Y14.5M, 1982.

	MILLIMETERS		INCHES	
DIM	MIN	MAX	MIN	MAX
A	9.40	10.16	0.370	0.400
B	6.10	6.60	0.240	0.260
C	3.94	4.45	0.155	0.175
D	0.38	0.51	0.015	0.020
F	1.02	1.78	0.040	0.070
G	2.54 BSC		0.100 BSC	
H	0.76	1.27	0.030	0.050
J	0.20	0.30	0.008	0.012
K	2.92	3.43	0.115	0.135
L	7.62 BSC		0.300 BSC	
M	---	10°	---	10°
N	0.76	1.01	0.030	0.040

PACKAGE DIMENSIONS

Micro8™
DM SUFFIX
PLASTIC PACKAGE
CASE 846A−02
ISSUE F

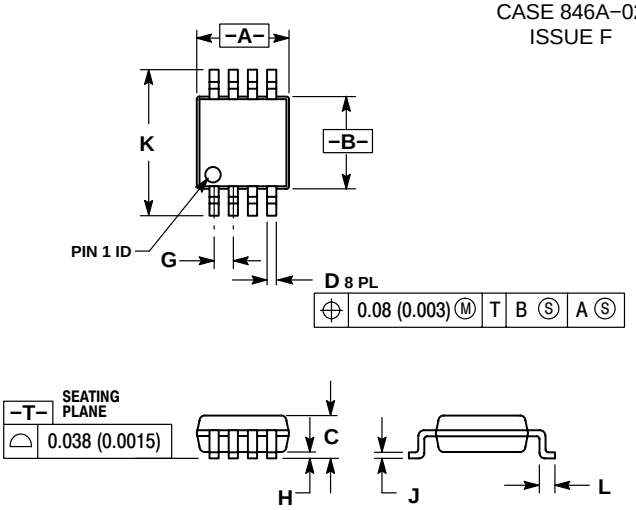

NOTES:
1. DIMENSIONING AND TOLERANCING PER ANSI Y14.5M, 1982.
2. CONTROLLING DIMENSION: MILLIMETER.
3. DIMENSION A DOES NOT INCLUDE MOLD FLASH, PROTRUSIONS OR GATE BURRS. MOLD FLASH, PROTRUSIONS OR GATE BURRS SHALL NOT EXCEED 0.15 (0.006) PER SIDE.
4. DIMENSION B DOES NOT INCLUDE INTERLEAD FLASH OR PROTRUSION. INTERLEAD FLASH OR PROTRUSION SHALL NOT EXCEED 0.25 (0.010) PER SIDE.
5. 846A−01 OBSOLETE, NEW STANDARD 846A−02.

	MILLIMETERS		INCHES	
DIM	MIN	MAX	MIN	MAX
A	2.90	3.10	0.114	0.122
B	2.90	3.10	0.114	0.122
C	---	1.10	---	0.043
D	0.25	0.40	0.010	0.016
G	0.65 BSC		0.026 BSC	
H	0.05	0.15	0.002	0.006
J	0.13	0.23	0.005	0.009
K	4.75	5.05	0.187	0.199
L	0.40	0.70	0.016	0.028

SOLDERING FOOTPRINT*

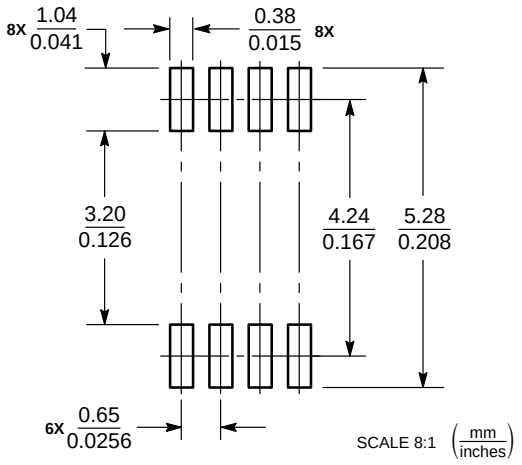

*For additional information on our Pb−Free strategy and soldering details, please download the ON Semiconductor Soldering and Mounting Techniques Reference Manual, SOLDERRM/D.

SOIC−8
D SUFFIX
PLASTIC PACKAGE
CASE 751−07
ISSUE AB

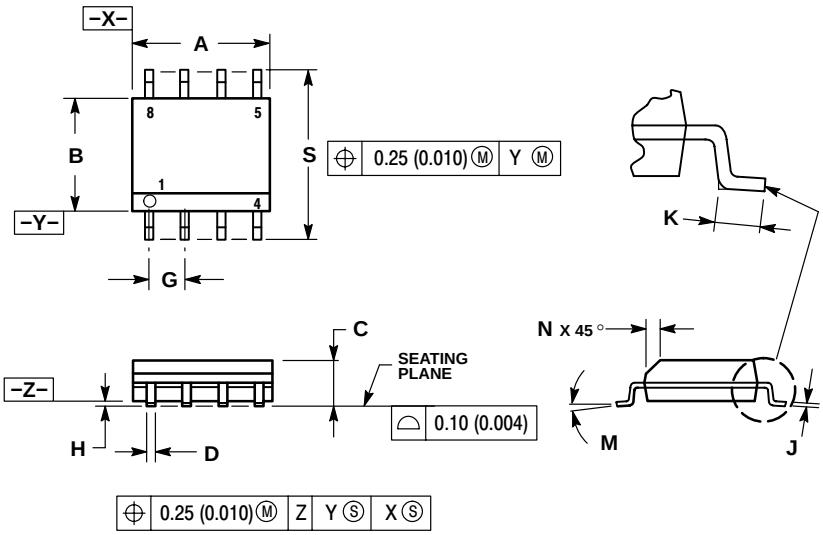

NOTES:
1. DIMENSIONING AND TOLERANCING PER ANSI Y14.5M, 1982.
2. CONTROLLING DIMENSION: MILLIMETER.
3. DIMENSION A AND B DO NOT INCLUDE MOLD PROTRUSION.
4. MAXIMUM MOLD PROTRUSION 0.15 (0.006) PER SIDE.
5. DIMENSION D DOES NOT INCLUDE DAMBAR PROTRUSION. ALLOWABLE DAMBAR PROTRUSION SHALL BE 0.127 (0.005) TOTAL IN EXCESS OF THE D DIMENSION AT MAXIMUM MATERIAL CONDITION.
6. 751−01 THRU 751−06 ARE OBSOLETE. NEW STANDARD IS 751−07.

	MILLIMETERS		INCHES	
DIM	MIN	MAX	MIN	MAX
A	4.80	5.00	0.189	0.197
B	3.80	4.00	0.150	0.157
C	1.35	1.75	0.053	0.069
D	0.33	0.51	0.013	0.020
G	1.27 BSC		0.050 BSC	
H	0.10	0.25	0.004	0.010
J	0.19	0.25	0.007	0.010
K	0.40	1.27	0.016	0.050
M	0 °	8 °	0 °	8 °
N	0.25	0.50	0.010	0.020
S	5.80	6.20	0.228	0.244

SOLDERING FOOTPRINT*

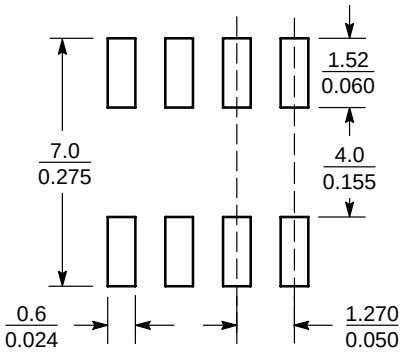

SCALE 6:1 $\left(\frac{\text{mm}}{\text{inches}}\right)$

*For additional information on our Pb−Free strategy and soldering details, please download the ON Semiconductor Soldering and Mounting Techniques Reference Manual, SOLDERRM/D.

Micro8 is a trademark of International Rectifier.

ON Semiconductor and are registered trademarks of Semiconductor Components Industries, LLC (SCILLC). SCILLC reserves the right to make changes without further notice to any products herein. SCILLC makes no warranty, representation or guarantee regarding the suitability of its products for any particular purpose, nor does SCILLC assume any liability arising out of the application or use of any product or circuit, and specifically disclaims any and all liability, including without limitation special, consequential or incidental damages. “Typical” parameters which may be provided in SCILLC data sheets and/or specifications can and do vary in different applications and actual performance may vary over time. All operating parameters, including “Typicals” must be validated for each customer application by customer’s technical experts. SCILLC does not convey any license under its patent rights nor the rights of others. SCILLC products are not designed, intended, or authorized for use as components in systems intended for surgical implant into the body, or other applications intended to support or sustain life, or for any other application in which the failure of the SCILLC product could create a situation where personal injury or death may occur. Should Buyer purchase or use SCILLC products for any such unintended or unauthorized application, Buyer shall indemnify and hold SCILLC and its officers, employees, subsidiaries, affiliates, and distributors harmless against all claims, costs, damages, and expenses, and reasonable attorney fees arising out of, directly or indirectly, any claim of personal injury or death associated with such unintended or unauthorized use, even if such claim alleges that SCILLC was negligent regarding the design or manufacture of the part. SCILLC is an Equal Opportunity/Affirmative Action Employer. This literature is subject to all applicable copyright laws and is not for resale in any manner.

PUBLICATION ORDERING INFORMATION

LITERATURE FULFILLMENT:
Literature Distribution Center for ON Semiconductor
P.O. Box 5163, Denver, Colorado 80217 USA
Phone: 303−675−2175 or 800−344−3860 Toll Free USA/Canada
Fax: 303−675−2176 or 800−344−3867 Toll Free USA/Canada
Email: orderlit@onsemi.com

N. American Technical Support: 800−282−9855 Toll Free USA/Canada

Japan: ON Semiconductor, Japan Customer Focus Center
2−9−1 Kamimeguro, Meguro−ku, Tokyo, Japan 153−0051
Phone: 81−3−5773−3850

ON Semiconductor Website: http://onsemi.com

Order Literature: http://www.onsemi.com/litorder

For additional information, please contact your local Sales Representative.