# About Amphenol® Aerospace

## Your Source for Interconnect Products

Amphenol Aerospace

Amphenol Aerospace

## CONTACT US:

**Amphenol Aerospace**
**40-60 Delaware Avenue**
**Sidney, NY 13838-1395**

**Customer Service:**
**Mon - Fri 8AM - 5PM**
**Phone: (800) 678-0141**
**Fax: (607) 563-5157**
**Online: www.amphenol-aerospace.com**

*Amphenol Aerospace, Amphenol Commercial Air, and Amphenol Industrial Operations Main Facility in Sidney, NY USA*

## ABOUT AMPHENOL AEROSPACE:

Amphenol Aerospace, a Division of Amphenol Corporation, is one of the largest manufacturers of interconnect products in the world for the Military, Commercial Aerospace and Industrial markets. Amphenol designs, manufactures and markets circular and rectangular, electronic, fiber optic, EMI/EMP filter, and a variety of special applications connectors and interconnect systems.

Datasheet.live

Our state-of-the-art facility is nestled at the foothills of the Catskill Mountains in Sidney, NY. The Amphenol complex houses many technologies including CNC machining, die-casting, molding, impact and extruding, plating, screw machining and process controls. Our fully equipped material evaluation lab and engineering organization utilize the latest in computer aided design software and analysis tools, allowing us to design, test, and qualify advanced interconnect systems. Amphenol's interconnect products are supplied to thousands of OEMs worldwide and are supported by our worldwide sales and engineering force, including the largest global network of electronic distributors.

CARE

### Customer-Centric:

Our **#1 priority** is our customers who deserve quality product on time.

### Accountable:

Clear owners, clear actions, clear results.

### Reliable:

What we build matters and quality is imperative.

### Enthusiastic:

Challenges create rewarding opportunities. Enthusiasm is contagious and we will spread it.

## QUALITY ASSURANCE:

Amphenol Aerospace has been awarded both AS9100 - Revision C and ISO9001:2008 Quality Assurance Certifications.

# MIL-DTL-38999, Series I LJT, II JT, III TV, HD

## Insert Availability and Identification Chart

| Series JT II | Series LJT I | Series TV III | Military III | MIL-DTL-27599 JT/LJT Solder | Crimp | Hermetics Class H | Hermetics Class Y | Hermetics TV* | Service Rating | Total Contacts | ■ 23 HD | 22D | 22M | 22 | 20 | 16 | 12 | 12 (Coax) | 10 (Power) | 8 (Coax) | 8†† (Twinax) |
|---|---|---|---|---|---|---|---|---|---|---|---|---|---|---|---|---|---|---|---|---|---|
| 8-2■ | | | | P | | | | | M | 2 | | | | | 2 | | | | | | |
| 8-3■ | | | | X | NA | P | P | | M | 3 | | | | | 3 | | | | | | |
| | 9-3■ | | | X | | | | | | | | | | | | | | | | | |
| | | 9-5★■ | | | | | | | Grounded | 1 | | | | | | | | | | | 1 |
| 8-6 | | | | X | X | P | P | | M | 6 | | | 6 | | | | | | | | |
| | 9-6 | | | X | X | P | P | | | | | | | | | | | | | | |
| | 9-7■ | | | X | | | | | M | 7 | | | 7 | | | | | | | | |
| | | 9-9■ | | | | | | | N | 9 | 9 | | | | | | | | | | |
| | 9-22■ | | | X | | | | | I | 2 | | | | | 2 | | | | | | |
| 8-35 | | | | | X | P | P | | M | 6 | | 6 | | | | | | | | | |
| | 9-35 | 9-35 | A35 | | X | P | P | P | | | | | | | | | | | | | |
| 8-44 | | | | | X | P | P | | M | 4 | | | | 4 | | | | | | | |
| | 9-44 | | | | X | | | | | | | | | | | | | | | | |
| | | 9-94■ | | | ◆ | | | | M | 2 | | | | | 2 | | | | | | |
| 8-97■ | | | | X | | | | | M | 4 | | | 2 | | 2 | | | | | | |
| 8-98 | | | | S | X | P | P | | I | 3 | | | | | 3 | | | | | | |
| | 9-98 | 9-98 | A98 | X | X | P | P | P | | | | | | | | | | | | | |
| | 11-2★ | 11-2★ | B2 | | X | P** | | | I | 2 | | | | | | 2 | | | | | |
| 10-4 | | | | | 3 | | | | I | 4 | | | | | 4 | | | | | | |
| | 11-4 | 11-4 | | X | 2 | | | | | | | | | | | | | | | | |
| 10-5 | | | | X | X | P | P | | I | 5 | | | | | 5 | | | | | | |
| | 11-5 | 11-5 | B5 | X | X | | | P | | | | | | | | | | | | | |
| | 11-6■ | | | S | | | | | I | 6 | | | | | 6 | | | | | | |
| 10-13 | | | | X | X | P/S | P/S | | M | 13 | | | 13 | | | | | | | | |
| | 11-13 | | | X | X | P/S | P/S | | | | | | | | | | | | | | |
| | | 11-19■ | | | | | | | N | 19 | 19 | | | | | | | | | | |
| 10-35 | | | | | X | P/S | P/S | | M | 13 | | 13 | | | | | | | | | |
| | 11-35 | 11-35 | B35 | | X | P/S | P/S | P | | | | | | | | | | | | | |
| | | 11-54■ | | | X ◆ | | | | II | 4 | | 4 | | | | | | | | | |
| 10-98 | | | | X | X | P/S | P/S | | I | 6 | | | | | 6 | | | | | | |
| | 11-98 | 11-98 | B98 | X | X | P/S | P/S | P | | | | | | | | | | | | | |
| 10-99 | | | | | X | P | P | | I | 7 | | | | | 7 | | | | | | |
| | 11-99 | 11-99 | B99 | | X X | | | P | | | | | | | | | | | | | |
| 12-3 | | | | X | X ◆ | P | P | | II | 3 | | | | | | 3 | | | | | |
| | 13-3■ | | | | P | | | | | | | | | | | | | | | | |
| 12-4 | | | | X | X | P | P | | I | 4 | | | | | | 4 | | | | | |
| | 13-4★ | 13-4★ | C4 | X | X | P | P | P | | | | | | | | | | | | | |
| 12-8 | | | | X | X | P | P | | I | 8 | | | | | 8 | | | | | | |
| | 13-8 | 13-8 | C8 | X | X | P | P | P | | | | | | | | | | | | | |
| | | 13-13■ | | | | | | | I, Fiber Optic | 4 | | | | | | 2** | 2 | | | | |
| 12-22 | | | | | X | P/S | P/S | | M | 22 | | | 22 | | | | | | | | |
| | 13-22 | | | X | X | P/S | P/S | | | | | | | | | | | | | | |
| | | 13-26■ | | | 2 | | | | M | 8 | | 6 | | | | | 2 | | | | |
| | | 13-32■ | | | | | | | N | 32 | 32 | | | | | | | | | | |
| 12-35 | | | | | X | P/S | P/S | | M | 22 | | 22 | | | | | | | | | |
| | 13-35 | 13-35 | C35 | | X | P/S | P/S | P | | | | | | | | | | | | | |
| | | 13-63■ | | | ◆ | | | | I | 4 | | | | | | 2 | 2 | | | | |
| 12-98 | | | | X | X | P/S | P/S | | I | 10 | | | | | 10 | | | | | | |
| | 13-98 | 13-98 | C98 | X | X | P/S | P/S | P | | | | | | | | | | | | | |
| | | 15-AT■ | | | X | | | | I | 13 | | 10 | | | | | 3 | | | | |
| 14-4■ | | | | | 2 | | | | I | 4 | | | | | | | 4 | | | | |
| | 15-4■ | 15-4■ | | | 2 ◆ | | | | | | | | | | | | | | | | |
| 14-5 | | | | X | X | P | P | | II | 5 | | | | | | 5 | | | | | |
| | 15-5★ | 15-5★ | D5 | X | X | P | P | P | | | | | | | | | | | | | |

X Completely tooled.
\+ Majority of tooling is completed (contact Amphenol Aerospace for availability).
◆ Not tooled for 02-R.
P Available with Pin contacts only
S Available with Socket contacts only
P/S Available with Pin contacts or Socket contacts
★ Ground plane proprietary option available. Arrg. 9-5 is exclusively ground plane type.
■ Not Mil-Qualified.
✧ 21-75 is Mil-Qualified with twinax contacts only. Note: MS connector 21-75 is supplied with size 8 twinax. Commercial connector 21-75 is supplied with size 8 coax.

■ **HD** designates High Density 38999 Series III insert patterns which use size 23 contacts only. Not rated over 175°C.
* Hermetic inserts - solder termination standard. (Contact Amphenol Aerospace for optional PCB or eyelet termination).
** Two size 16 contacts dedicated to fiber optics. See the Fiber Optic section for more information.
*** For use in MIL-STD-1760 applications (see pages 75 and 76).
† For RG 180/U and RG 195/U cables only.
†† Size 8 Coax and Twinax are interchangeable.
(2) Not Tooled for RP or 02RE
(3) Pin inserts only, not tooled for RP or 02RE (Consult Amphenol Aerospace for avail.)
(5) MS Connector 21-79 has provision for two size 8 coax contacts. Coax contacts are not supplied unless specified by customer.

# MIL-DTL-38999, Series I LJT, II JT, III TV, HD

## Insert Availability and Identification Chart

Amphenol Aerospace

| Series | Series | Series | Military | MIL-DTL-27599 | | Hermetics | | | | | ■ Contact Size | | | | | | | | | | |
|---|---|---|---|---|---|---|---|---|---|---|---|---|---|---|---|---|---|---|---|---|---|
| JT II | LJT I | TV III | III | JT/LJT Solder | Crimp | Class H | Class Y | TV* | Service Rating | Total Contacts | 23 HD | 22D | 22M | 22 | 20 | 16 | 12 | 12 (Coax) | 8 (Coax) | 8†† (Twinax) | 4 |
| 14-15 | | | | X | X | P | P | | I | 15 | | | | | 14 | 1 | | | | | |
| | 15-15 | 15-15 | D15 | X | X | P/S | P/S | P | I | | | | | | | | | | | | |
| 14-18 | | | | X | X | P/S | P/S | | I | 18 | | | | | 18 | | | | | | |
| | 15-18 | 15-18 | D18 | X | X | P/S | P/S | P | | | | | | | | | | | | | |
| 14-19■ | | | | X | X | | | | I | 19 | | | | | 19 | | | | | | |
| | 15-19 | 15-19 | D19 | | X | P | P | P | | | | | | | | | | | | | |
| 14-35 | | | | | X | P | P | | M | 37 | | 37 | | | | | | | | | |
| | 15-35 | 15-35 | D35 | | X | P/S | P/S | P | | | | | | | | | | | | | |
| 14-37 | | | | X | X | P | P | | M | 37 | | | 37 | | | | | | | | |
| | 15-37 | | | X | X | P | P | | | | | | | | | | | | | | |
| | | 15-55■ | | | | | | | N | 55 | 55 | | | | | | | | | | |
| 14-68■ | | | | | 2 | P | P | | 1 | 8 | | | | | | 8 | | | | | |
| | 15-68■ | | | X | X | | | | | | | | | | | | | | | | |
| 14-97 | | | | | X | P | P | | I | 12 | | | | | 8 | 4 | | | | | |
| | 15-97 | 15-97 | D97 | X | X | P | P | P | | | | | | | | | | | | | |
| | 17-2 | 17-2 | E2 | | X ◆ | | | | M | 39 | | 38 | | | | | | | | 1 | |
| | | 17-EA■ | | | | | | | M | 19 | | 10 | | | 3 | 2 | 4 | | | | |
| | | 17-EC■ | | | | | | | M | 41 | | 32 | | | 9 | | | | | | |
| 16-6 | | | | | X | P | P | | I | 6 | | | | | | | 6 | | | | |
| | 17-6 | 17-6 | E6 | | X | P | P | P | | | | | | | | | | | | | |
| 16-8 | | | | X | X | P | P | | II | 8 | | | | | | 8 | | | | | |
| | 17-8★ | 17-8★ | E8 | X | X | P/S | P/S | P | | | | | | | | | | | | | |
| 16-13■ | | | | | 2 | | | | I | 13 | | | | | | 13 | | | | | |
| | 17-13■ | | | | 2 | | | | | | | | | | | | | | | | |
| | 17-22■ | 17-22★■ | | | ◆ | | | | Coax | 4 | | | | | | | | 2 | 2 | | |
| | 17-25■ | 17-25■ | | | 2 | | | | M | 24 | | 22 | | | | | | | 2 | | |
| 16-26 | | | | X | X | P/S | P/S | | I | 26 | | | | | 26 | | | | | | |
| | 17-26 | 17-26 | E26 | X | X | P/S | P/S | P | | | | | | | | | | | | | |
| 16-35 | | | | | X | P | P | | M | 55 | | 55 | | | | | | | | | |
| | 17-35 | 17-35 | E35 | X | X | P | P | P | | | | | | | | | | | | | |
| 16-42 | | | | | X | | | | M | 42 | | | | 42 | | | | | | | |
| | 17-42■ | | | | P | | | | | | | | | | | | | | | | |
| | | 17-52■ | | | X ◆ | | | | M | 2 | | | | | | | | | | 2 | |
| 16-55 | | | | X | X | P/S | P/S | | M | 55 | | | 55 | | | | | | | | |
| | 17-55 | | | X | X | P/S | P/S | | | | | | | | | | | | | | |
| | | 17-60■ | | | X | | | | I/Coax | 10 | | 8 | | | | | | | 2 | | |
| | | 17-73■ | | | | | | | N | 73 | 73 | | | | | | | | | | |
| 16-99 | | | | X | X | P | P | | I | 23 | | | | | 21 | 2 | | | | | |
| | 17-99 | 17-99 | E99 | X | X | P | P | | | | | | | | | | | | | | |
| | | 19-AD■ | | | X ◆ | | | | Inst. | 17 | | | | | 16 | | | | | 1 | |
| | | 19-FA■ | | | | | | | M | 23 | | 6 | | | 8 | 7 | 2 | | | | |
| 18-11 | | | | X | X | P | P | | II | 11 | | | | | | 11 | | | | | |
| | 19-11★ | 19-11★ | F11 | X | X | P | P | P | | | | | | | | | | | | | |
| | 19-18 | 19-18 | F18 | | 2 2 | | | | M | 18 | | 14 | | | | | | | | 4 | |
| 18-28 | | | | X | X | | | | I | 28 | | | | | 26 | 2 | | | | | |
| | 19-28■ | 19-28 | F28 | X | P X | | | | | | | | | | | | | | | | |
| 18-30 | | | | X | X | | | | I | 30 | | | | | 29 | 1 | | | | | |
| | 19-30■ | | | X | P | | | | | | | | | | | | | | | | |
| | | 19-31■ | | | X | | | | M | 15 | | 12 | | | | | 1 | | 2 | | |
| 18-32 | | | | X | X | P/S | P/S | | I | 32 | | | | | 32 | | | | | | |
| | 19-32 | 19-32 | F32 | X | X | P/S | P/S | P | | | | | | | | | | | | | |
| 18-35 | | | | | X | P | P | | M | 66 | | 66 | | | | | | | | | |
| | 19-35 | 19-35 | F35 | | X | P | P | P | | | | | | | | | | | | | |
| 18-53 | | | | X | X | | | | M | 53 | | | | 53 | | | | | | | |
| | 19-53■ | | | | P | | | | | | | | | | | | | | | | |
| 18-66 | | | | X | X | P | P | | M | 66 | | | 66 | | | | | | | | |
| | 19-66 | | | | X | P | P | | | | | | | | | | | | | | |
| | 19-67■ | | | X | 3 | S | S | | M | 67 | | | 67 | | | | | | | | |
| 18-68■ | | | | | 2 | | | | I | 18 | | | | | | 18 | | | | | |
| | 19-68■ | 19-68■ | | | 3 S | | | | | | | | | | | | | | | | |
| 18-96■ | | | | | 2 | | | | I | 9 | | | | | | | 9 | | | | |
| | | 19-88■ | | | | | | | N | 88 | 88 | | | | | | | | | | |
| 20-1 | | | | | X | P | P | | M | 79 | | | 79 | | | | | | | | |
| | 21-1 | | | | X | P/S | P/S | | | | | | | | | | | | | | |

# MIL-DTL-38999, Series I LJT, II JT, III TV, HD

## Insert Availability and Identification Chart

| Series JT II | Series LJT I | Series TV III | Military III | MIL-DTL-27599 JT/LJT Solder | Crimp | | Hermetics H | Hermetics Y | Hermetics TV* | Service Rating | Total | ■ Contact Size 23 HD | 22D | 22M | 22 | 20 | 16 | 16 (Cx) | 12 | 12 (Cx) | 10 (Power) | 8 (Power) | 8 (Cx) | 8†† (Twinax) | 4 |
|---|---|---|---|---|---|---|---|---|---|---|---|---|---|---|---|---|---|---|---|---|---|---|---|---|---|
| 20-2 | | | | | X | | | | | M | 65 | | | | 65 | | | | | | | | | | |
| | 21-2■ | | | | X | | | | | | | | | | | | | | | | | | | | |
| 20-11■ | | | | | 3 | | | | | I | 11 | | | | | | | | 11 | | | | | | |
| | 21-11★ | 21-11★ | G11 | | X | | | | | | | | | | | | | | | | | | | | |
| 20-16 | | | | X | X | | P/S | P/S | | II | 16 | | | | | | 16 | | | | | | | | |
| | 21-16★ | 21-16★ | G16 | X | X | | P | P | P | | | | | | | | | | | | | | | | |
| | 21-25■ | | | | | | | | | I | 25 | | | | | 25 | | | | | | | | | |
| | 21-27■ | | | X | | | | | | I | 27 | | | | | 27 | | | | | | | | | |
| | | 21-29 | | | X | | | | | I | 27 | | | | | 19 | 4 | | 4 | | | | | | |
| 20-35 | | | | | X | | P | P | | M | 79 | | 79 | | | | | | | | | | | | |
| | 21-35 | 21-35 | G35 | | X | | P/S | P/S | P | | | | | | | | | | | | | | | | |
| 20-39 | | | | X | X | | P | P | | I | 39 | | | | | 37 | 2 | | | | | | | | |
| | 21-39 | 21-39 | G39 | X | X | | P | P | P | | | | | | | | | | | | | | | | |
| 20-41 | | | | X | X | | P | P | | I | 41 | | | | | 41 | | | | | | | | | |
| | 21-41 | 21-41 | G41 | X | X | | P/S | P/S | P | | | | | | | | | | | | | | | | |
| | | 21-48■ | | | | | | | | M | 4 | | | | | | | | | | | 4 | | | |
| | 21-75★ | 21-75★✧ | G75 | | 2 | X | | | | N M | 4 | | | | | | | | | | | | 4 | (4) | |
| | 21-79■ | 21-79■ | | | 2 | X | | | | II | 19 | | 17 | | | | | | | | | | 2 | (2) | |
| | | 21-121■ | | | | | | | | N | 121 | 121 | | | | | | | | | | | | | |
| 22-1 | | | | | X | | P/S | P/S | | M | 100 | | | 100 | | | | | | | | | | | |
| | 23-1 | | | | X | | P | P | | | | | | | | | | | | | | | | | |
| 22-2 | | | | X | X | | P | P | | M | 85 | | | | 85 | | | | | | | | | | |
| | 23-2 | | | X | X | | P | P | | | | | | | | | | | | | | | | | |
| | 23-6★■ | 23-6★■ | | X | P | | | | | M | 6 | | | | | | | | | | | | | 6 | |
| 22-14■ | | | | | 2 | ◆ | | | | I | 14 | | | | | | | | 14 | | | | | | |
| | 23-14■ | 23-14■ | | | 2 | ◆ | | | | | | | | | | | | | | | | | | | |
| 22-21 | | | | X | X | | P | P | | II | 21 | | | | | | 21 | | | | | | | | |
| | 23-21★ | 23-21★ | H21 | X | X | | P | P | P | | | | | | | | | | | | | | | | |
| 22-32 | | | | X | X | | P | P | | I | 32 | | | | | 32 | | | | | | | | | |
| | 23-32■ | | | X | P | | | | | | | | | | | | | | | | | | | | |
| | 23-34■ | | | X | | | | | | I | 34 | | | | | 34 | | | | | | | | | |
| 22-35 | | | | | X | | P/S | P/S | | M | 100 | | 100 | | | | | | | | | | | | |
| | 23-35 | 23-35 | H35 | | X | | P | P | P | | | | | | | | | | | | | | | | |
| 22-53■ | | | | | P | | | | | I | 53 | | | | | 53 | | | | | | | | | |
| | 23-53 | 23-53 | H53 | X | X | | P/S | P/S | P | | | | | | | | | | | | | | | | |
| | | 23-54 ■ | | | X | | | | | M | 53 | | 40 | | | | 9 | | 4 | | | | | | |
| 22-55 | | | | X | X | | P | P | | I | 55 | | | | | 55 | | | | | | | | | |
| | 23-55 | 23-55 | H55 | | X | | | | P | | | | | | | | | | | | | | | | |
| | | 23-63 ■ | | | S | | | | | M | 57 | | 49 | | | | | 4 | | 4 | | | | | |
| | 23-97■ | | | X | | | | | | II | 16 | | | | | | 16 | | | | | | | | |
| | 23-99■ | | | X | | | | | | II | 11 | | | | | | 11 | | | | | | | | |
| | | 23-151 ■ | | | | | | | | N | 151 | 151 | | | | | | | | | | | | | |
| 24-1 | | | | | X | | P | P | | M | 128 | | | 128 | | | | | | | | | | | |
| | 25-1 | | | | X | | P | P | | | | | | | | | | | | | | | | | |
| 24-2 | | | | | X | | | | | M | 100 | | | | 100 | | | | | | | | | | |
| | 25-2 | | | | X | | | | | | | | | | | | | | | | | | | | |
| 24-4 | | | | | X | | P | P | | I | 56 | | | | | 48 | 8 | | | | | | | | |
| | 25-4 | 25-4 | J4 | | X | | | | P | | | | | | | | | | | | | | | | |
| | 25-7■ | 25-7 | J7 | | X | | | | | M Twx | 99 | | 97 | | | | | | | | | | 2 | | |
| | | 25-8★ | J8 | | ◆ | | | | | Twinax | 8 | | | | | | | | | | | | | 8 | |
| | | 25-11*** | J11 | | 2 | ◆ | | | | N | 11 | | | | | 2 | | | | | 9 | | | | |
| | | 25-16■ | | | | | | | | M | 8 | | | | | 6 | | | | | | | | | 2 |
| | | 25-17■ | | | ◆ | | | | | M | 42 | | 36 | | | | | | | | | | | 6 | |
| 24-19■ | | | | | X | | P | P | | I | 19 | | | | | | | | 19 | | | | | | |
| | 25-19★ | 25-19★ | J19 | | X | | | | P | | | | | | | | | | | | | | | | |
| | 25-20■ | 25-20*** | J20 | | 2 | ◆ | | | | N | 30 | | | | | 10 | 13 | | | 4 | | | | 3 | |

X Completely tooled.
\+ Majority of tooling is completed (contact Amphenol Aerospace for availability).
◆ Not tooled for 02-R.
P Available with Pin contacts only
S Available with Socket contacts only
P/S Available with Pin contacts or Socket contacts
★ Ground plane proprietary option available. Arrg. 9-5, 26-62 is exclusively ground plane type.
■ Not Mil-Qualified.
✧ 21-75 is Mil-Qualified with twinax contacts only.
* Hermetic inserts - solder termination standard. (Contact Amphenol Aerospace for optional PCB or eyelet termination).

■ HD designates High Density 38999 Series III insert patterns which use size 23 contacts only. Not rated over 175°C.
** Two size 16 contacts dedicated to fiber optics. See the Fiber Optic Section for more information.
*** For use in MIL-STD-1760 applications (see pages 75 and 76).
† For RG 180/U and RG 195/U cables only.
†† Size 8 Coax and Twinax are interchangeable.
(2) Not Tooled for RP or 02RE
(3) Pin inserts only, not tooled for RP or 02RE (Consult Amphenol for avail.)
(4) MS connector 21-75 is supplied with size 8 twinax. Commercial connector 21-75 is supplied with size 8 coax.
(5) MS Connector 21-79 has provision for two size 8 coax contacts. Coax contacts are not supplied unless specified by customer.
(PWR) Suffix at end of part number to replace coax, twinax, and fiber contacts with power contacts.

# MIL-DTL-38999, Series I LJT, II JT, III TV, HD

## Insert Availability and Identification Chart

Amphenol Aerospace

| Series | Series | Series | Military | MIL-DTL-27599 | | Hermetics | | | | | Contact Size | | | | | | | | | | | |
|---|---|---|---|---|---|---|---|---|---|---|---|---|---|---|---|---|---|---|---|---|---|---|
| JT II | LJT I | TV III | III | JT/LJT Solder | Crimp | H | Y | TV* | Service Rating | Total Contacts | 23 HD | 22D | 20 | 16 | 12 (Fiber) | 12 | 12 (Coax) | 10 | 8 (Coax) | 8†† (Twinax | 8 Quadrax | 4 |
| 24-24 | | | | | X | P | P | | I | 24 | | | | 12 | | 12 | | | | | | |
| | 25-24★ | 25-24★ | J24 | | X | P | P | | | | | | | | | | | | | | | |
| | | 25-26■★ | | | ✦ | | | | I | 25 | | | 16 | | | 5 | | | 4 | | | |
| 24-29 | | | | | X | | | | I | 29 | | | | 29 | | | | | | | | |
| | 25-29★ | 25-29★ | J29 | X | X | | | | | | | | | | | | | | | | | |
| 24-35 | | | | | X | P | P | | New | 128 | | 128 | | | | | | | | | | |
| | 25-35 | 25-35 | J35 | | X | P | P | P | M | | | | | | | | | | | | | |
| 24-37 | | | | | X | | | | I | 37 | | | | 37 | | | | | | | | |
| | 25-37★ | 25-37★ | J37 | | X | | | | | | | | | | | | | | | | | |
| | | 25-41■ | | | | | | | N Inst. | 41 | | 22 | 3 | 11 | | | 2 | | | 3 | | |
| 24-43■ | | | | | 3 | | | | I | 43 | | | 23 | 20 | | | | | | | | |
| | 25-43 | 25-43 | J43 | X | 2 ◆ | | | | | | | | | | | | | | | | | |
| | 25-46 | 25-46 | J46 | | 2 ◆ | | | | I | 46 | | | 40 | 4 | | | | | 2 | | | |
| 24-61 | | | | X | X | P | P | | I | 61 | | | 61 | | | | | | | | | |
| | 25-61 | 25-61 | J61 | X | X | P | P | P | | | | | | | | | | | | | | |
| | | 25-62 ■★ | | | X ◆ | | | | I | 12 | | | | 8 | | | | | | | 4 | |
| | | 25-90 | J90 | | ◆ | | | | I | 46 | | | 40 | 4 | | | | | | 2 | | |
| | | 25-187 ■ | | | | | | | N | 187 | 187 | | | | | | | | | | | |
| | | 25-1A ■ | | | | | | | N | 8 | | | | 4 | | | | | | | | 4 |
| | | 25-AT ■ | | | X | | | | M | 60 | | 31 | 12 | 11 | 2 | | 2 | | | 2 | | |
| | | 25-F4 ■ | | | X | | | | M/I | 66 | | 49 | | 13 | | 4 | | | | | | |



## TV SERIES III

### SELECT SHELL SIZE - SPECIAL INSERT ARRANGEMENT

**(Not Mil-Spec Qualified)**

| Shell Size-Insert Arrg. | Crimp | Hermetics* | Service Rating | Total Contacts | Comments | Contact Size 22D | 20 | 16 | 12 |
|---|---|---|---|---|---|---|---|---|---|
| 9-2 | X | | I | 2 | Formerly Pyle | | 2 | | |
| 15-4 | X | | II | 4 | Formerly Pyle | | | 4 | |
| 15-25 | X | | M | 25 | Formerly Pyle | 22 | | 3 | |
| 17-20 | X | | M | 20 | Formerly Pyle | 16 | | | 4 |
| 21-12 | X | | I | 12 | Formerly Pyle | | 3 | | 9 |
| 21-21 | X | | M/Inst. | 41 | Improved sealing | 32 | | | 9 |
| 21-99 | X | | M | 16 | Formerly Pyle | 5 | | | 11 |
| 25-92 | X | | M | 101 | Formerly Pyle | 92 | | 9 | |
| 25-97 | X | | M | 42 | Formerly Pyle | 26 | | 3 | 13 |

## LJT SERIES I

### SELECT SHELL SIZE - SPECIAL INSERT ARRANGEMENT

**(Not Mil-Spec Qualified)**

| Shell Size-Insert Arrg. | Crimp | Service Rating | Total Contacts | Comments | Contact Size 22D | 20 | 16 | 12 |
|---|---|---|---|---|---|---|---|---|
| 25-64 | X | | 64 | Formerly Pyle | 40 | 8 | 10 | 6 |

### SELECT NON-STANDARD SHELL SIZE

**- Special Insert Arrangement**

| Shell Size-Insert Arrg. | Crimp | Hermetics* | Service Rating | Total Con-tacts | Contact Size 22D | 20 | 8 | 4 | 0 |
|---|---|---|---|---|---|---|---|---|---|
| 25L-3 | X | | II | 3 | | | 1 | 2 | |
| 25L-7 | X | | II | 7 | | | 7 | | |
| 33-3 | X | | II | 3 | | | | 1 | 2 |
| 33-5 | X | | II | 5 | | | | 5 | |
| 33-6 | X | | II | 6 | | | 2 | 4 | |
| 37-5 | X | | II | 4 | | | | | 4 |

**(Insert arrangements requiring non-standard shells)**

X Completely tooled.
\+ Majority of tooling is completed (contact Amphenol Aerospace for availability).
◆ Not tooled for 02-R.
P Pin inserts only (contact Amphenol Aerospace for socket availability).
★ Ground plane proprietary option available. Arrangement 9-5, 25-62 is exclusively ground plane type.
■ Not Mil-Qualified.
* Hermetic inserts - solder termination standard. (Contact Amphenol Aerospace for optional PCB or eyelet termination).
** Two size 16 contacts dedicated to fiber optics. See the Fiber Optic section for more information.
*** For use in MIL-STD-1760 applications (pgs. 75 and 76).
† For RG 180/U and RG 195/U cables only.
†† Size 8 Coax and Twinax are interchangeable.
Note: 25L-3 and 25L-7 use longer shells.
(PWR) Suffix at end of part number to replace coax, twinax, and fiber contacts with power contacts.

# MIL-DTL-38999, Series I LJT, II JT, III TV, HD

## Insert Arrangements

**Front face of pin inserts illustrated**

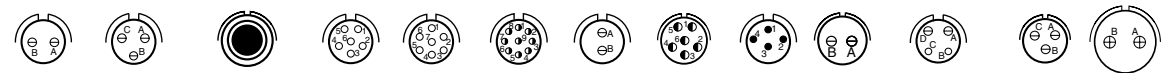

| Shell Size & Insert Arrg. for: | | | | | | | | | | | | | |
|---|---|---|---|---|---|---|---|---|---|---|---|---|---|
| Series II JT | 8-2 | 8-3 | | 8-6 | | | | 8-35 | 8-44 | | 8-97 | 8-98 | |
| Series I LJT | | 9-3 | | 9-6 | 9-7 | | 9-22 | 9-35 | 9-44 | | | 9-98 | 11-2 |
| Series III TV | | | 9-5 | | | 9-9 HD | | 9-35 | | 9-94 | | 9-98 | 11-2 |
| Service Rating | M | M | Grounded | M | M | N | I | M | M | M | M | I | I |
| Number of Contacts | 2 | 3 | 1 | 6 | 7 | 9 | 2 | 6 | 4 | 2 | 2 2 | 3 | 2 |
| Contact Size | 20 | 20 | 8 Twinax | 22M | 22M | 23 | 20 | 22D | 22 | 20 | 22M 20 | 20 | 16 |

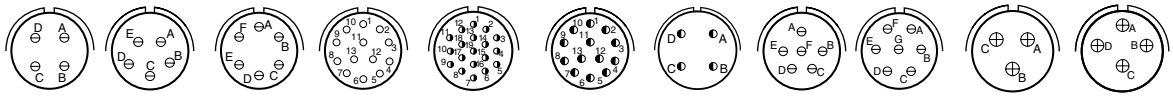

| Shell Size & Insert Arrg. for: | | | | | | | | | | | |
|---|---|---|---|---|---|---|---|---|---|---|---|
| Series II JT | 10-4 | 10-5 | | 10-13 | | 10-35 | | 10-98 | 10-99 | 12-3 | 12-4 |
| Series I LJT | 11-4 | 11-5 | 11-6 | 11-13 | | 11-35 | | 11-98 | 11-99 | 13-3 | 13-4 |
| Series III TV | 11-4 | 11-5 | | | 11-19 HD | 11-35 | 11-54 | 11-98 | 11-99 | | 13-4 |
| Service Rating | I | I | I | M | N | M | II | I | I | II | I |
| Number of Contacts | 4 | 5 | 6 | 13 | 19 | 13 | 4 | 6 | 7 | 3 | 4 |
| Contact Size | 20 | 20 | 20 | 22M | 23 | 22D | 22D | 20 | 20 | 16 | 16 |

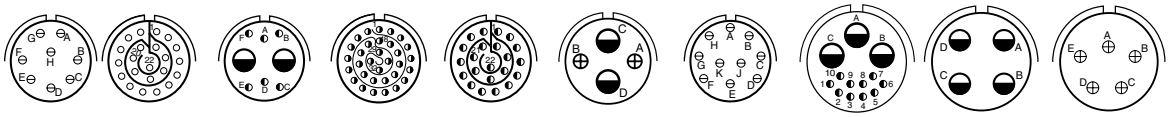

| Shell Size & Insert Arrg. for: | | | | | | | | | | |
|---|---|---|---|---|---|---|---|---|---|---|
| Series II JT | 12-8 | 12-22 | | | 12-35 | | 12-98 | | 14-4 | 14-5 |
| Series I LJT | 13-8 | 13-22 | | | 13-35 | | 13-98 | | 15-4 | 15-5 |
| Series III TV | 13-8 | | 13-26 | 13-32 HD | 13-35 | 13-63 | 13-98 | 15-AT | 15-4 | 15-5 |
| Service Rating | I | M | M | N | M | I | I | I | I | II |
| Number of Contacts | 8 | 22 | 6 2 | 32 | 22 | 2 2 | 10 | 10 3 | 4 | 5 |
| Contact Size | 20 | 22M | 22D 12 | 23 | 22D | 16 12 | 20 | 22D 12 | 12 | 16 |

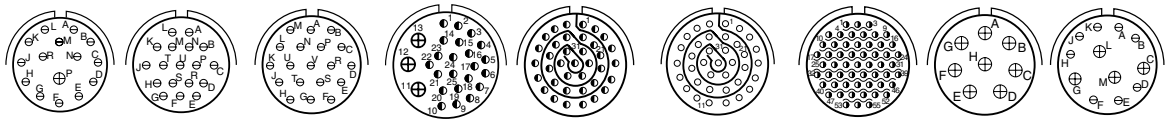

| Shell Size & Insert Arrg. for: | | | | | | | | | |
|---|---|---|---|---|---|---|---|---|---|
| Series II JT | 14-15 | 14-18 | 14-19 | | 14-35 | 14-37 | | 14-68 | 14-97 |
| Series I LJT | 15-15 | 15-18 | 15-19 | | 15-35 | 15-37 | | 15-68 | 15-97 |
| Series III TV | 15-15 | 15-18 | 15-19 | 15-25 | 15-35 | | 15-55 HD | | 15-97 |
| Service Rating | I | I | I | M | M | M | N | I | I |
| Number of Contacts | 14 1 | 18 | 19 | 22 3 | 37 | 37 | 55 | 8 | 8 4 |
| Contact Size | 20 16 | 20 | 20 | 22D 16 | 22D | 22M | 23 | 16 | 20 16 |

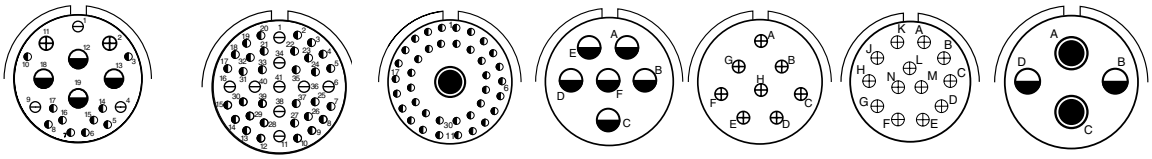

| Shell Size & Insert Arrg. for: | | | | | | | | | |
|---|---|---|---|---|---|---|---|---|---|
| Series II JT | | | | | 16-6 | 16-8 | 16-13 | | |
| Series I LJT | | | | 17-2 | 17-6 | 17-8 | 17-13 | 17-22 | |
| Series III TV | 17-EA | | 17-EC | 17-2 | 17-6 | 17-8 | | 17-22 | |
| Service Rating | | | | M | I | II | I | Coax | |
| Number of Contacts | 10 3 2 4 | | 32 9 | 38 1 | 6 | 8 | 13 | 2 2 | |
| Contact Size | 22D 20 16 12 | | 22D 20 | 22D 8 Twinax | 12 | 16 | 16 | 12 Coax 8 Coax | |

**HD:** High Density HD38999 (use size 23 contacts only)

**CONTACT LEGEND** 8 10 12 16 20 22 22M 22D 23

# MIL-DTL-38999, Series I LJT, II JT, III TV, HD

## Insert Arrangements

Amphenol Aerospace

**Front face of pin inserts illustrated**

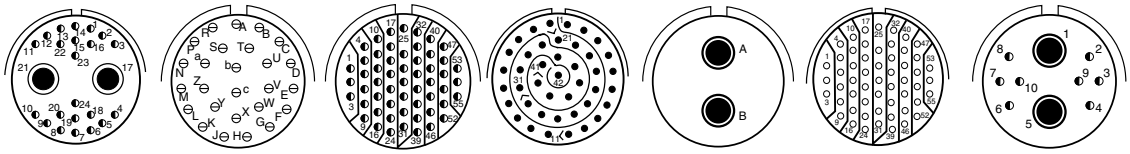

| Shell Size & Insert Arrg. for: | | | | | | | |
|---|---|---|---|---|---|---|---|
| Series II JT | | 16-26 | 16-35 | 16-42 | | 16-55 | |
| Series I LJT | 17-25 | 17-26 | 17-35 | 17-42 | | 17-55 | |
| Series III TV | | 17-26 | 17-35 | | 17-52 | | 17-60 |
| Service Rating | M | I | M | M | M | M | I/Coax |
| Number of Contacts | 22 2 | 26 | 55 | 42 | 2 | 55 | 8 2 |
| Contact Size | 22D 8 Coax | 20 | 22D | 22 | 8 Twinax | 22M | 22D 8 Coax |

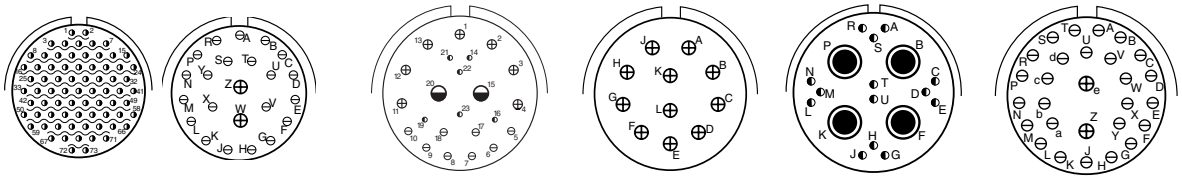

| Shell Size & Insert Arrg. for: | | | | | | |
|---|---|---|---|---|---|---|
| Series II JT | | 16-99 | | 18-11 | | 18-28 |
| Series I LJT | | 17-99 | | 19-11 | 19-18 | 19-28 |
| Series III TV | 17-73 HD | 17-99 | 19-FA | 19-11 | 19-18 | 19-28 |
| Service Rating | N | I | M | II | M | M |
| Number of Contacts | 73 | 21 2 | 6 8 7 2 | 11 | 14 4 | 26 2 |
| Contact Size | 23 | 20 16 | 22D 20 16 12 | 16 | 22D 8 Twinax | 20 16 |

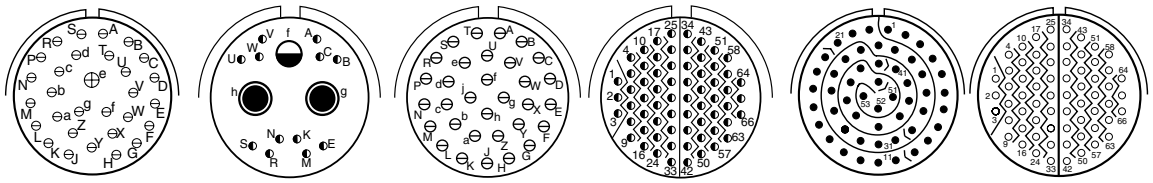

| Shell Size & Insert Arrg. for: | | | | | | |
|---|---|---|---|---|---|---|
| Series II JT | 18-30 | | 18-32 | 18-35 | 18-53 | 18-66 |
| Series I LJT | 19-30 | | 19-32 | 19-35 | 19-53 | 19-66 |
| Series III TV | | 19-31 | 19-32 | 19-35 | | |
| Service Rating | I | M | 1 | M | M | M |
| Number of Contacts | 29 1 | 2 1 12 | 32 | 66 | 53 | 66 |
| Contact Size | 20 16 | 8 Coax 12 22D | 20 | 22D | 22 | 22M |

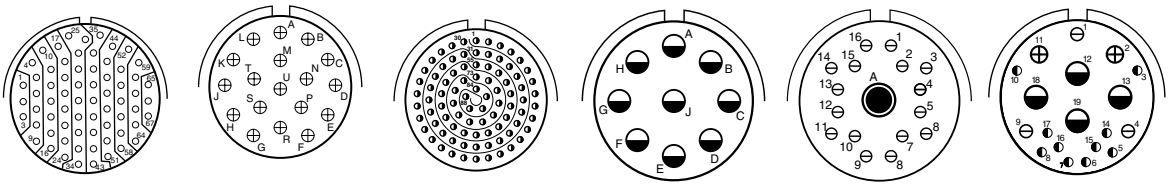

| Shell Size & Insert Arrg. for: | | | | | | |
|---|---|---|---|---|---|---|
| Series II JT | | 18-68 | | 18-96 | | |
| Series I LJT | 19-67 | 19-68 | | | | |
| Series III TV | | | 19-88 HD | | 19-AD | 19-FA |
| Service Rating | M | I | N | I | Inst. | M |
| Number of Contacts | 67 | 18 | 88 | 9 | 16 1 | 6 8 7 2 |
| Contact Size | 22M | 16 | 23 | 12 | 20 8 Twinax | 22D 20 16 12 |

**CONTACT LEGEND** 8 10 12 16 20 22 22M 22D 23

**HD:** High Density HD38999 (use size 23 contacts only)

# MIL-DTL-38999, Series I LJT, II JT, III TV, HD

## Insert Arrangements

**Front face of pin inserts illustrated**

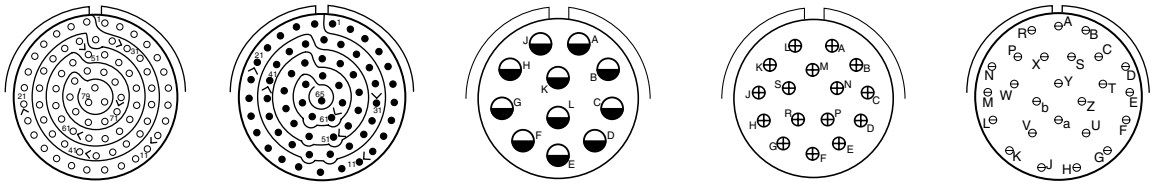

| Shell Size & Insert Arrg. for: | | | | | |
|---|---|---|---|---|---|
| Series II JT | 20-1 | 20-2 | 20-11 | 20-16 | |
| Series I LJT | 21-1 | 21-2 | 21-11 | 21-16 | 21-25 |
| Series III TV | | | 21-11 | 21-16 | |
| Service Rating | M | II | I | II | I |
| Number of Contacts | 79 | 65 | 11 | 16 | 25 |
| Contact Size | 22M | 22 | 12 | 16 | 20 |

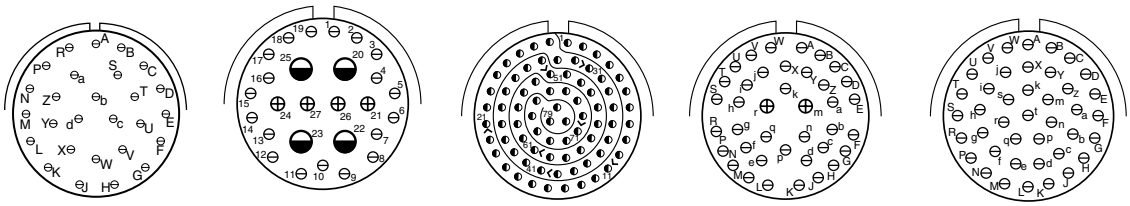

| Shell Size & Insert Arrg. for: | | | | | | | | |
|---|---|---|---|---|---|---|---|---|
| Series II JT | | | | | 20-35 | 20-39 | | 20-41 |
| Series I LJT | 21-27 | | | | 21-35 | 21-39 | | 21-41 |
| Series III TV | | | 21-29 | | 21-35 | 21-39 | | 21-41 |
| Service Rating | I | | I | | M | 1 | | I |
| Number of Contacts | 27 | 19 | 4 | 4 | 79 | 37 | 2 | 41 |
| Contact Size | 20 | 20 | 16 | 12 | 22D | 20 | 16 | 20 |

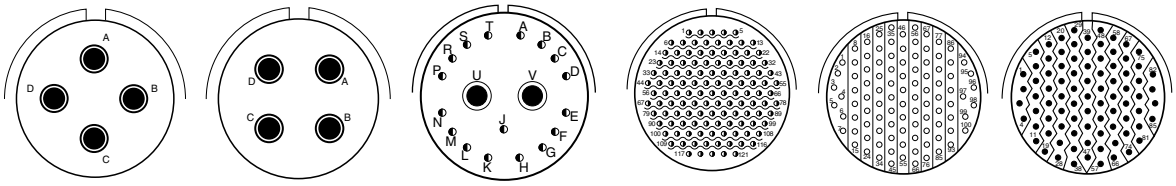

| Shell Size & Insert Arrg. for: | | | | | | |
|---|---|---|---|---|---|---|
| Series II JT | | | | | 22-1 | 22-2 |
| Series I LJT | | 21-75 | 21-79 | | 23-1 | 23-2 |
| Series III TV | 21-48 | 21-75 | 21-79 | 21-121 HD | | |
| Service Rating | M | N | II | N | M | M |
| Number of Contacts | 4 | 4 | 17 (See Note) | 121 | 100 | 85 |
| Contact Size | 8 power | (See Note) | 22D | 23 | 22M | 22 |

**HD:** High Density HD38999 (use size 23 contacts only)
**Note:** MS connector 21-75 is supplied with four size 8 twinax contacts.
Commercial connector 21-75 is supplied with four size 8 coax contacts.
MS connector 21-79 has provision for two size 8 coax contacts.
Coax contacts are not supplied unless specified by customers.

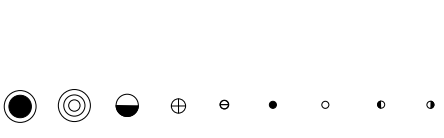

**CONTACT LEGEND** 8 10 12 16 20 22 22M 22D 23

# Insert Arrangements



**Front face of pin inserts illustrated**

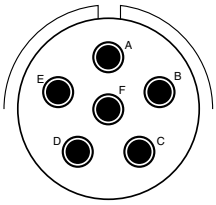
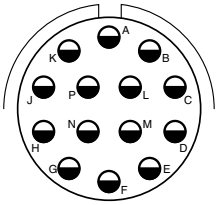
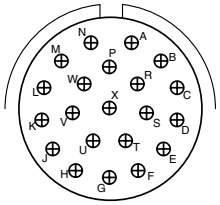
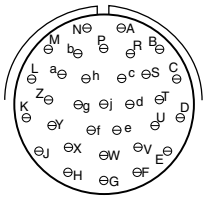
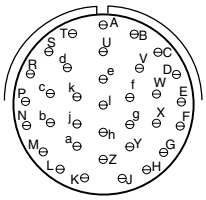

| Shell Size & Insert Arrg. for: | | | | | |
|---|---|---|---|---|---|
| Series II JT | | 22-14 | 22-21 | 22-32 | |
| Series I LJT | 23-6 | 23-14 | 23-21 | 23-32 | 23-34 |
| Series III TV | 23-6 | | 23-21 | | |
| Service Rating | M | I | II | I | I |
| Number of Contacts | 6 | 14 | 21 | 32 | 34 |
| Contact Size | 8 Twinax | 12 | 16 | 20 | 20 |

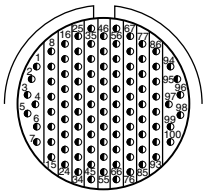
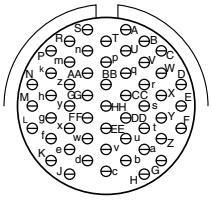
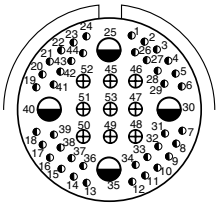
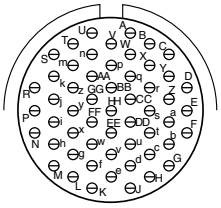
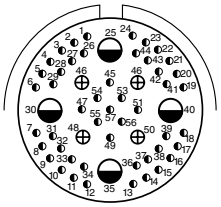

| Shell Size & Insert Arrg. for: | | | | | |
|---|---|---|---|---|---|
| Series II JT | 22-35 | 22-53 | | 22-55 | |
| Series I LJT | 23-35 | 23-53 | | 23-55 | |
| Series III TV | 23-35 | 23-53 | 23-54 | 23-55 | 23-63 |
| Service Rating | M | I | M | I | M |
| Number of Contacts | 100 | 53 | 40 9 4 | 55 | 49 4 4 |
| Contact Size | 22D | 20 | 22D 16 12 | 20 | 22D 16 12 |
| | | | | | Coax Coax |

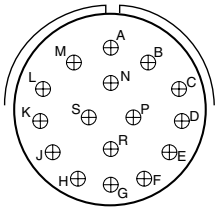
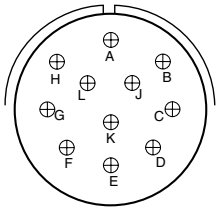
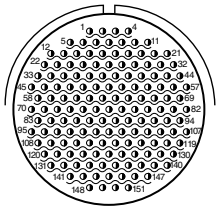
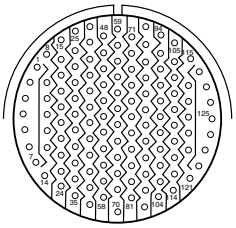
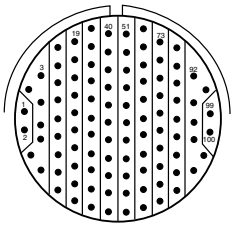

| Shell Size & Insert Arrg. for: | | | | | |
|---|---|---|---|---|---|
| Series II JT | | | | 24-1 | 24-2 |
| Series I LJT | 23-97 | 23-99 | | 25-1 | 25-2 |
| Series III TV | | | 23-151 HD | | |
| Service Rating | II | II | N | M | M |
| Number of Contacts | 16 | 11 | 151 | 128 | 100 |
| Contact Size | 16 | 16 | 23 | 22M | 22 |

| CONTACT LEGEND | 8 | 10 | 12 | 16 | 20 | 22 | 22M | 22D | 23 |
|---|---|---|---|---|---|---|---|---|---|

**HD:** High Density HD38999 (use size 23 contacts only)

# MIL-DTL-38999, Series I LJT, II JT, III TV

## Insert Arrangements

**Front face of pin inserts illustrated**

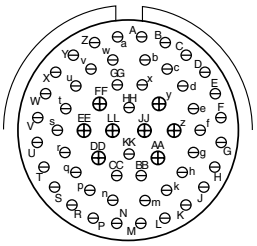
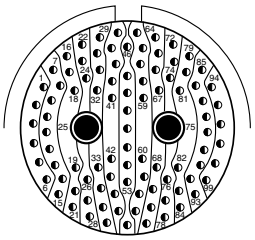
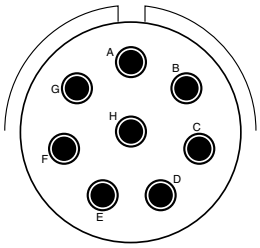
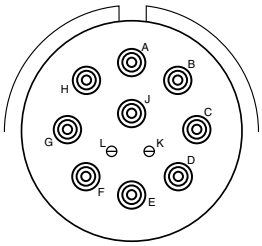

| Shell Size & Insert Arrg. for: | | | | | | | | |
|---|---|---|---|---|---|---|---|---|
| Series II JT | 24-4 | | | | | | | |
| Series I LJT | 25-4 | | 25-7 | | | 25-11 | | |
| Series III TV | 25-4 | | 25-7 | | 25-8 | 25-11*** | | |
| Service Rating | I | | M | | Twinax | N | | |
| Number of Contacts | 48 | 8 | 97 | 2 | 8 | 2 | 9 | |
| Contact Size | 20 | 16 | 22D | 8 Twinax | 8 Twinax | 20 | 10 | |

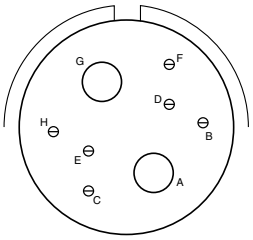
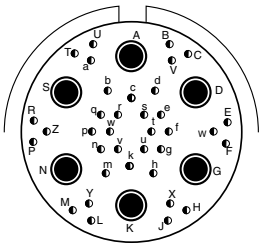
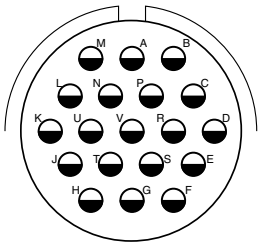
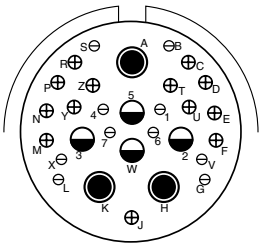

| Shell Size & Insert Arrg. for: | | | | | | | | | |
|---|---|---|---|---|---|---|---|---|---|
| Series II JT | | | | | 24-19 | | | | |
| Series I LJT | | | | | 25-19 | 25-20 | | | |
| Series III TV | 25-16 | | 25-17 | | 25-19 | 25-20*** | | | |
| Service Rating | M | | M | | I | N | | | |
| Number of Contacts | 6 | 2 | 36 | 6 | 19 | 10 | 13 | 3 | 4 |
| Contact Size | 20 | 4 | 22D | 8 Twinax | 12 | 20 | 16 | 8 Twinax | 12 Coax (With Matched Impedance) |

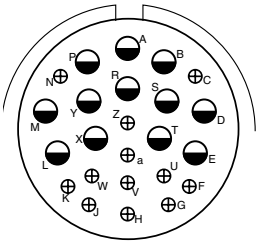
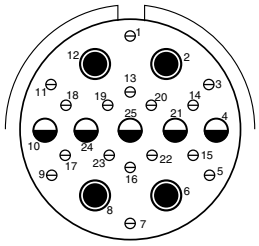
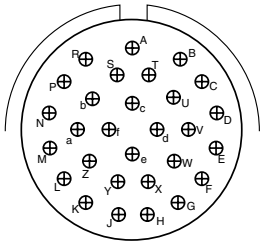
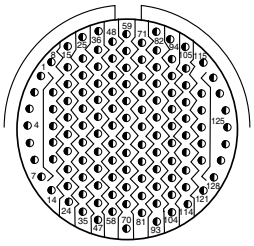

| Shell Size & Insert Arrg. for: | | | | | | | | |
|---|---|---|---|---|---|---|---|---|
| Series II JT | 24-24 | | | | | 24-29 | 24-35 | |
| Series I LJT | 25-24 | | | | | 25-29 | 25-35 | |
| Series III TV | 25-24 | | 25-26 | | | 25-29 | 25-35 | |
| Service Rating | I | | I | | | I | M | |
| Number of Contacts | 12 | 12 | 16 | 5 | 4 | 29 | 128 | |
| Contact Size | 16 | 12 | 20 | 12 | 8 Coax | 16 | 22D | |

*** For use in MIL-STD-1760 applications (see pages 75 and 76).

| CONTACT LEGEND | 8 | 10 | 12 | 16 | 20 | 22 | 22M | 22D | 23 |
|---|---|---|---|---|---|---|---|---|---|

Amphenol Aerospace

## Insert Arrangements

**Front face of pin inserts illustrated**



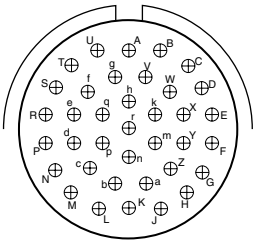
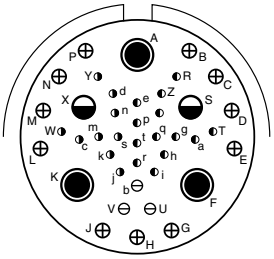
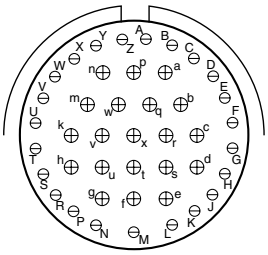

| Shell Size & Insert Arrg. for: | | | | | | | | |
|---|---|---|---|---|---|---|---|---|
| Series II JT | 24-37 | | | | | | 25-43 | |
| Series I LJT | 25-37 | | | | | | 25-43 | |
| Series III TV | 25-37 | 25-41 | | | | | 25-43 | |
| Service Rating | I | N/Inst. | | | | | I | |
| Number of Contacts | 37 | 22 | 3 | 11 | 2 | 3 | 23 | 20 |
| Contact Size | 16 | 22D | 20 | 16 | 12 Coax | 8 Twinax | 20 | 16 |

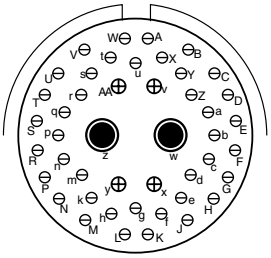
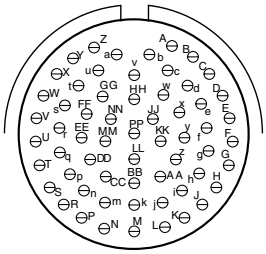
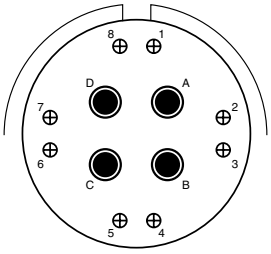
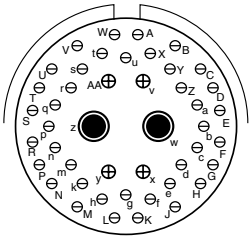

| Shell Size & Insert Arrg. for: | | | | | | | | | |
|---|---|---|---|---|---|---|---|---|---|
| Series II JT | | | | 24-61 | | | | | |
| Series I LJT | 25-46 | | | 25-61 | | | | | |
| Series III TV | 25-46 | | | 25-61 | 25-62 | | 25-90 | | |
| Service Rating | I | | | I | I | | I | | |
| Number of Contacts | 40 | 4 | 2 | 61 | 8 | 4 | 40 | 4 | 2 |
| Contact Size | 20 | 16 | 8 Coax † | 20 | 16 | 8 | 20 | 16 | 8 Twinax |
| | | | | | Ground Plane Only | | | | |

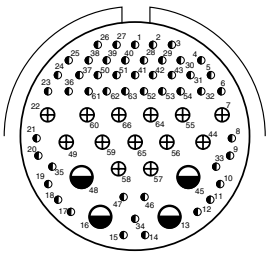
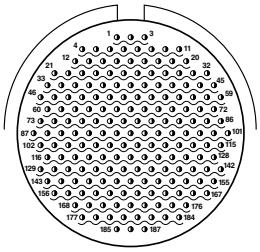
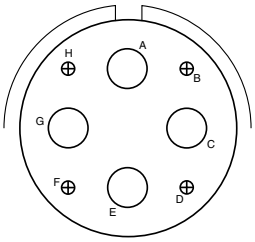
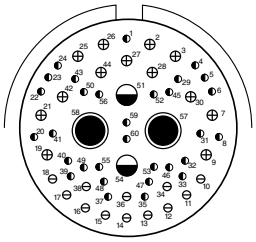

| Shell Size & Insert Arrg. for: | | | | | | | | | | |
|---|---|---|---|---|---|---|---|---|---|---|
| Series II JT | | | | | | | | | | |
| Series I LJT | | | | | | | | | | |
| Series III TV | 25-F4 | | | 25-187 HD | 25-1A | | 25-AT | | | |
| Service Rating | Size 22D=M, Balance =I | | | N | N | | N | | | |
| Number of Contacts | 49 | 13 | 4 | 187 | 4 | 4 | 2 | 2 | 13 | 12 | 31 |
| Contact Size | 22D | 16 | 12 | 23 | 16 | 4 | 10 | 12 | 16 | 20 | 22D |

† Coax contacts for RG180/U or RG195/U cable.

**HD:** High Density HD38999 (use size 23 contacts only)

| CONTACT LEGEND | 8 | 10 | 12 | 16 | 20 | 22 | 22M | 22D | 23 |
|---|---|---|---|---|---|---|---|---|---|

# MIL-DTL-38999, Series III TV

## Special Insert Arrangements

**Front face of pin inserts illustrated**

Shell Size & Insert Arrg. for:

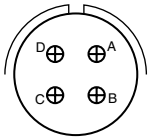


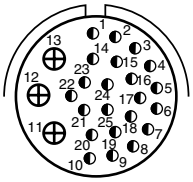

| Series III TV | 9-2 | 15-4* | 15-25 | |
|---|---|---|---|---|
| Service Rating | I | II | M | |
| Number of Contacts | 2 | 4 | 22 | 3 |
| Contact Size | 20 | 16 | 22D | 16 |

Shell Size & Insert Arrg. for:

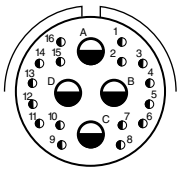

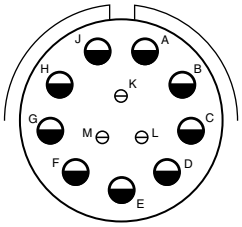

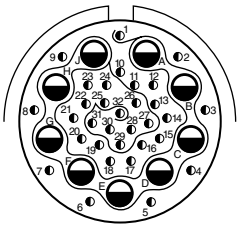

| Series III TV | 17-20 | | 21-12 | | 21-21 | |
|---|---|---|---|---|---|---|
| Service Rating | M | | I | | M/Inst. | |
| Number of Contacts | 16 | 4 | 3 | 9 | 32 | 9 |
| Contact Size | 22D | 12 | 20 | 12 | 22D | 12 |

Shell Size & Insert Arrg. for:

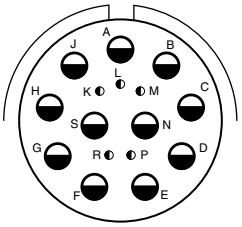

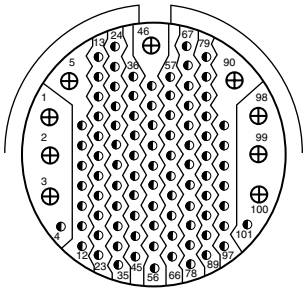

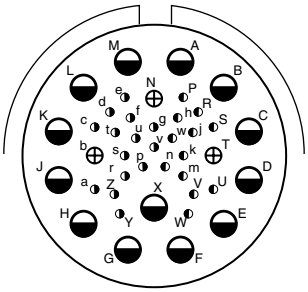

| Series III TV | 21-99 | | 25-92 | | 25-97 | | |
|---|---|---|---|---|---|---|---|
| Service Rating | M | | M | | M | | |
| Number of Contacts | 5 | 11 | 92 | 9 | 26 | 3 | 13 |
| Contact Size | 22D | 12 | 22D | 16 | 22D | 16 | 12 |

NOTE: Some specials shown here were formerly known as Pyle arrangements.
Consult Amphenol for how to order information for connectors with these inserts.
For further information on special arrangements consult Amphenol Aerospace, Sidney NY.
* Pyle 15-4 does not mate with Amphenol Tri-Start 15-4 insert.

**CONTACT LEGEND** 8 10 12 16 20 22 22M 22D 23*

# Special Insert Arrangements

Amphenol Aerospace



## Non-Standard Shells or Large Contacts

**Front face of pin inserts illustrated**

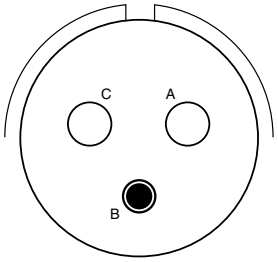


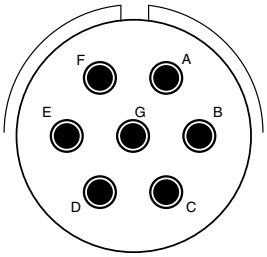


Shell Size & Insert Arrg. for:

| Series III TV | 25L-3 | | 25L-7 |
|---|---|---|---|
| Service Rating | II | | II |
| Number of Contacts | 1 | 2 | 7 |
| Contact Size | 8 | 4 | 8 |

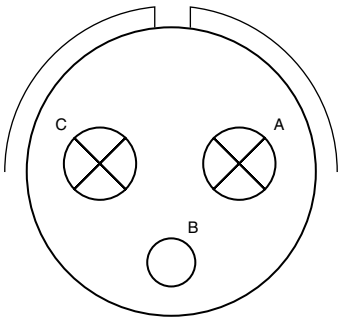


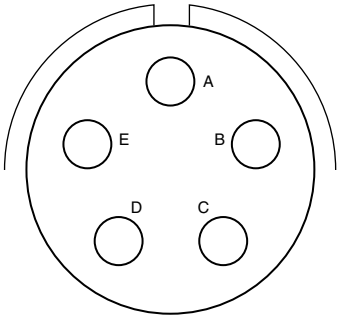


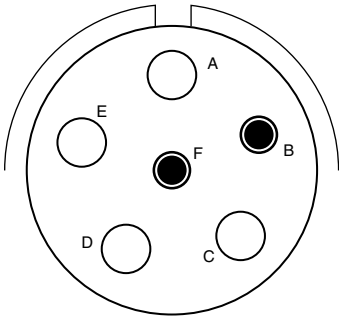


Shell Size & Insert Arrg. for:

| Series III TV | 33-3 | | 33-5 | 33-6 | |
|---|---|---|---|---|---|
| Service Rating | II | | II | II | |
| Number of Contacts | 1 | 2 | 5 | 2 | 4 |
| Contact Size | 4 | 0 | 4 | 8 | 4 |

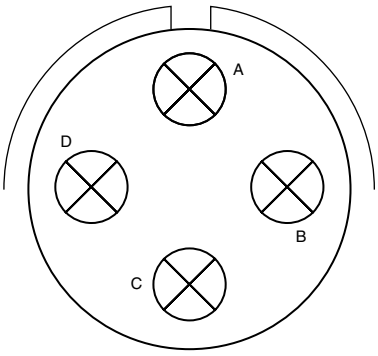


Shell Size & Insert Arrg. for:

| Series III TV | 37-5 |
|---|---|
| Service Rating | II |
| Number of Contacts | 4 |
| Contact Size | 0 |

NOTE: Some specials shown here were formerly known as Pyle arrangements. Consult Amphenol for how to order information for connectors with these inserts.
Consult Amphenol Aerospace for longer shell drawings.

**CONTACT LEGEND**

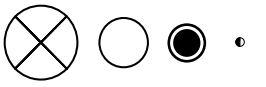

# PCB Contacts 38999, Series I LJT, II JT, III TV

## Insert Arrangements

### INSERT ARRANGEMENT #8-3 / 9-3

| Connector Type: | JT MIL-DTL-38999 Series II | LJT MIL-DTL-38999 Series I | Tri-Start MIL-DTL-38999 Series III | Number of Contacts | Contact Size | Service Rating |
|---|---|---|---|---|---|---|
| Insert Designation: | 8-3 | 9-3 | NA | 3 | 20 | M |

**Contact Locations**
Front face of pin insert shown

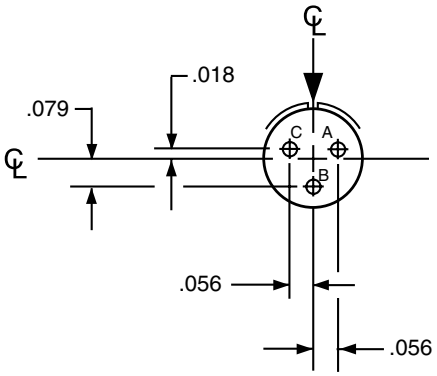


*Service Rating: M for MIL-DTL-38999

### INSERT ARRANGEMENT #8-35 / 9-35

| Connector Type: | JT MIL-DTL-38999 Series II | LJT MIL-DTL-38999 Series I | Tri-Start MIL-DTL-38999 Series III | Number of Contacts | Contact Size | Service Rating |
|---|---|---|---|---|---|---|
| Insert Designation: | 8-35 | 9-35 | 9-35 | 6 | 22D | M |

**Contact Locations**
Front face of pin insert shown

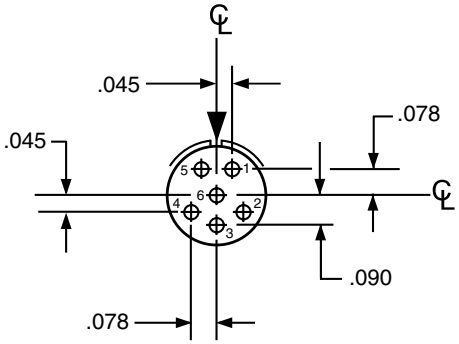


All dimensions for reference only. For alternate rotations see page 46 for Series III, page 86 for Series II, and page 114 for Series I.
Note: Shown in this catalog are the most common insert patterns for PCB applications. For availability of other arrangements, consult Amphenol Aerospace.

Amphenol Aerospace



## Insert Arrangements

### INSERT ARRANGEMENT #8-98 / 9-98

| Connector Type: | JT MIL-DTL-38999 Series II | LJT MIL-DTL-38999 Series I | Tri-Start MIL-DTL-38999 Series III | Number of Contacts | Contact Size | Service Rating |
|---|---|---|---|---|---|---|
| Insert Designation: | 8-98 | 9-98 | 9-98 | 3 | 20 | I |

**Contact Locations**

Front face of pin insert shown

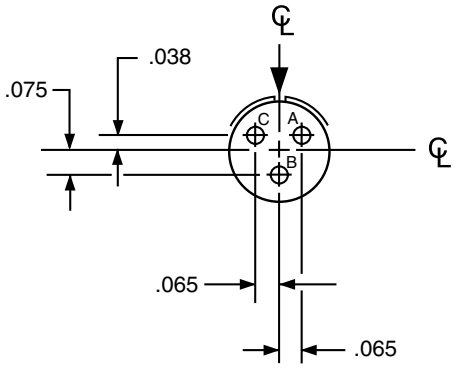


### INSERT ARRANGEMENT #10-5 / 11-5

| Connector Type: | JT MIL-DTL-38999 Series II | LJT MIL-DTL-38999 Series I | Tri-Start MIL-DTL-38999 Series III | Number of Contacts | Contact Size | Service Rating |
|---|---|---|---|---|---|---|
| Insert Designation: | 10-5 | 11-5 | 11-5 | 5 | 20 | I |

**Contact Locations**

Front face of pin insert shown

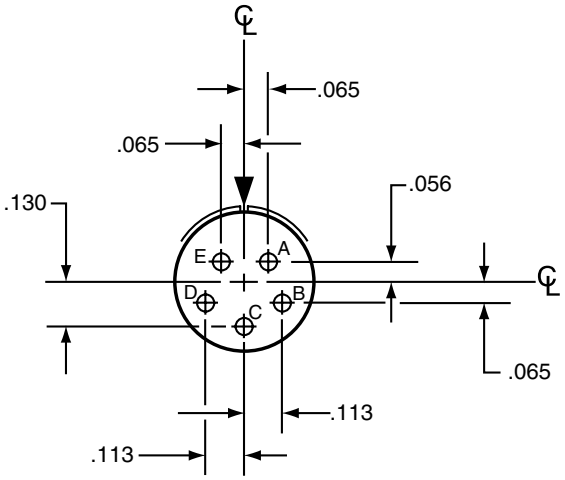


All dimensions for reference only. For alternate rotations see page 46 Series III, page 86 Series II, and page 114 Series I.

Note: Shown in this catalog are the most common insert patterns for PCB applications. For availability of other arrangements, consult Amphenol Aerospace.

# PCB Contacts 38999, Series I LJT, II JT, III TV

## Insert Arrangements

### INSERT ARRANGEMENT #10-6 / 11-6

| Connector Type: | JT MIL-DTL-38999 Series II | LJT MIL-DTL-38999 Series I | Tri-Start MIL-DTL-38999 Series III | Number of Contacts | Contact Size | Service Rating |
|---|---|---|---|---|---|---|
| Insert Designation: | NA | 11-6 | NA | 6 | 20 | I |

**Contact Locations**
Front face of pin insert shown

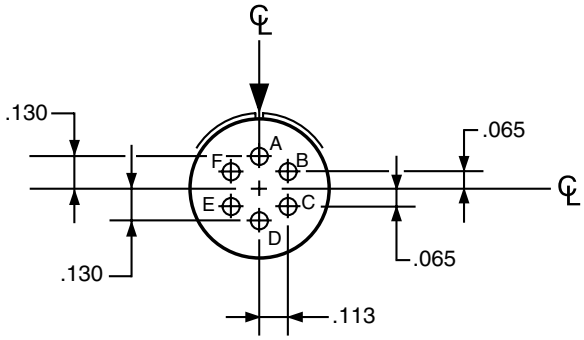


### INSERT ARRANGEMENT #10-35 / 11-35

| Connector Type: | JT MIL-DTL-38999 Series II | LJT MIL-DTL-38999 Series I | Tri-Start MIL-DTL-38999 Series III | Number of Contacts | Contact Size | Service Rating |
|---|---|---|---|---|---|---|
| Insert Designation: | 10-35 | 11-35 | 11-35 | 13 | 22D | M |

**Contact Locations**
Front face of pin insert shown

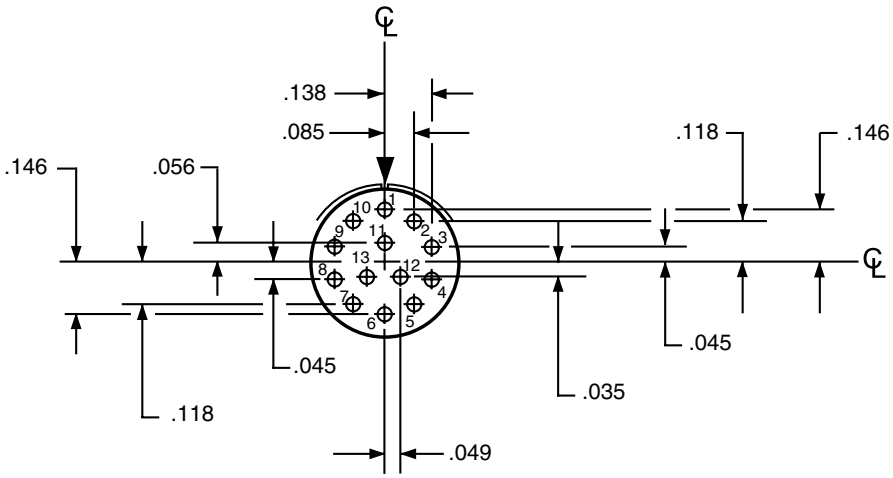


All dimensions for reference only. For alternate rotations see page 46 for Series III, page 86 for Series II, and page 114 for Series I.
Note: Shown in this catalog are the most common insert patterns for PCB applications. For availability of other arrangements, consult Amphenol Aerospace.

Amphenol Aerospace



## Insert Arrangements

### INSERT ARRANGEMENT #12-3 / 13-3

| Connector Type: | JT MIL-DTL-38999 Series II | LJT MIL-DTL-38999 Series I | Tri-Start MIL-DTL-38999 Series III | Number of Contacts | Contact Size | Service Rating |
|---|---|---|---|---|---|---|
| Insert Designation: | 12-3 | 13-3 | NA | 3 | 16 | II |

**Contact Locations**

Front face of pin insert shown

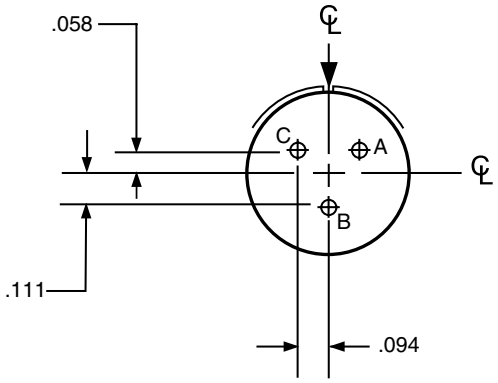


### INSERT ARRANGEMENT #12-35 / 13-35

| Connector Type: | JT MIL-DTL-38999 Series II | LJT MIL-DTL-38999 Series I | Tri-Start MIL-DTL-38999 Series III | Number of Contacts | Contact Size | Service Rating |
|---|---|---|---|---|---|---|
| Insert Designation: | 12-35 | 13-35 | 13-35 | 22 | 22D | M |

**Contact Locations**

Front face of pin insert shown

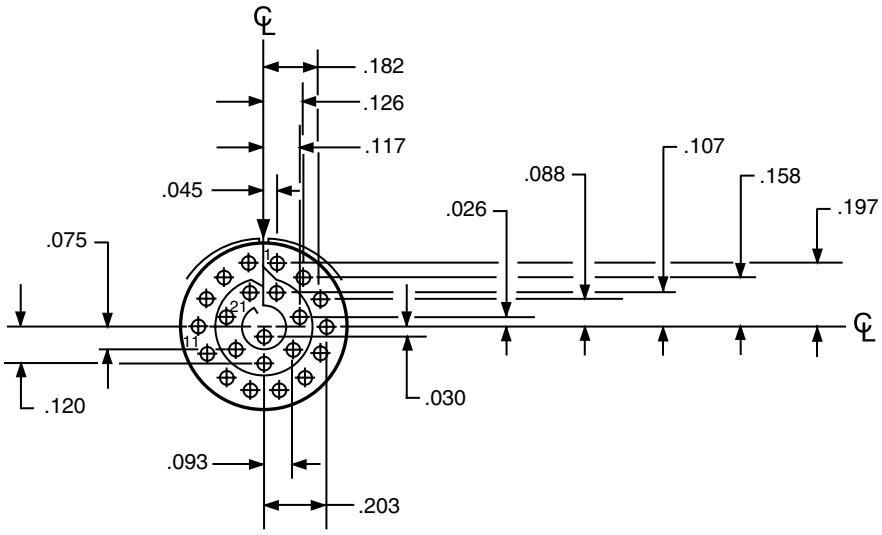


All dimensions for reference only. For alternate rotations see page 46 for Series III, page 86 for Series II, and page 114 for Series I.
Note: Shown in this catalog are the most common insert patterns for PCB applications. For availability of other arrangements, consult Amphenol Aerospace.

# PCB Contacts 38999, Series I LJT, II JT, III TV

## Insert Arrangements

### INSERT ARRANGEMENT #14-18 / 15-18

| Connector Type: | JT MIL-DTL-38999 Series II | LJT MIL-DTL-38999 Series I | Tri-Start MIL-DTL-38999 Series III |
|---|---|---|---|
| Insert Designation: | 14-18 | 15-18 | 15-18 |

| Number of Contacts | Contact Size | Service Rating |
|---|---|---|
| 18 | 20 | I |

**Contact Locations**

Front face of pin insert shown

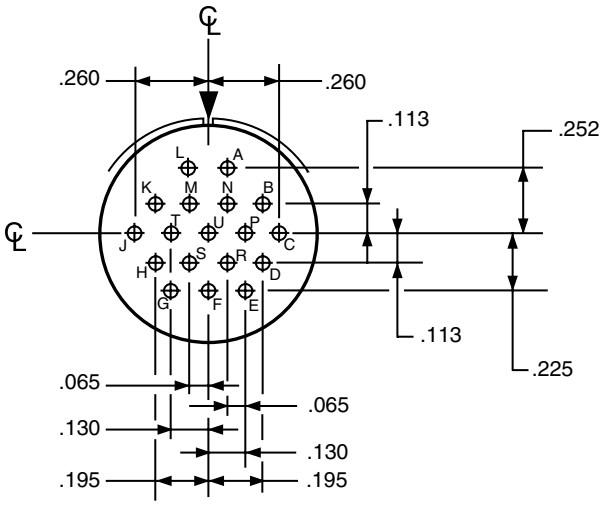


### INSERT ARRANGEMENT #14-19 / 15-19

| Connector Type: | JT MIL-DTL-38999 Series II | LJT MIL-DTL-38999 Series I | Tri-Start MIL-DTL-38999 Series III |
|---|---|---|---|
| Insert Designation: | 14-19 | 15-19 | 15-19 |

| Number of Contacts | Contact Size | Service Rating |
|---|---|---|
| 19 | 20 | I |

**Contact Locations**

Front face of pin insert shown

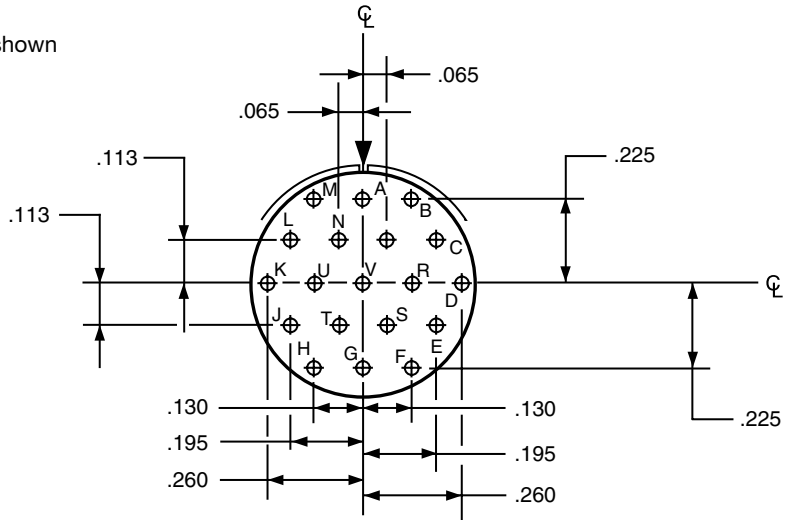


All dimensions for reference only. For alternate rotations see page 46 for Series III, page 86 for Series II, and page 114 for Series I.
Note: Shown in this catalog are the most common insert patterns for PCB applications. For availability of other arrangements, consult Amphenol Aerospace.

Amphenol Aerospace



## Insert Arrangements

### INSERT ARRANGEMENT #14-35 / 15-35

| Connector Type: | JT MIL-DTL-38999 Series II | LJT MIL-DTL-38999 Series I | Tri-Start MIL-DTL-38999 Series III | Number of Contacts | Contact Size | Service Rating |
|---|---|---|---|---|---|---|
| Insert Designation: | 14-35 | 15-35 | 15-35 | 37 | 22D | M |

**Contact Locations**
Front face of pin insert shown

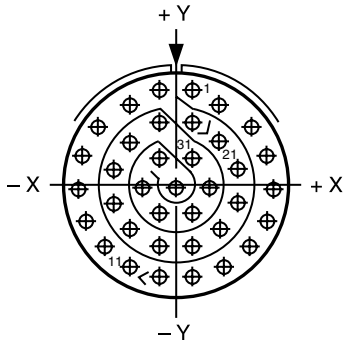


| Contact Hole Locations | | | Contact Hole Locations | | |
|---|---|---|---|---|---|
| Contact Number | Location X Axis | Location Y Axis | Contact Number | Location X Axis | Location Y Axis |
| 1 | +.045 | +.262 | 19 | +.045 | +.172 |
| 2 | +.123 | +.217 | 20 | +.123 | +.119 |
| 3 | +.211 | +.160 | 21 | +.170 | +.040 |
| 4 | +.254 | +.080 | 22 | +.170 | –.050 |
| 5 | +.266 | –.010 | 23 | +.123 | –.127 |
| 6 | +.247 | –.098 | 24 | +.045 | –.172 |
| 7 | +.200 | –.175 | 25 | –.045 | –.172 |
| 8 | +.130 | –.232 | 26 | –.123 | –.127 |
| 9 | +.045 | –.262 | 27 | –.170 | –.050 |
| 10 | –.045 | –.262 | 28 | –.170 | +.040 |
| 11 | –.130 | –.232 | 29 | –.123 | +.119 |
| 12 | –.200 | –.175 | 30 | –.045 | +.172 |
| 13 | –.247 | –.098 | 31 | +.045 | +.074 |
| 14 | –.266 | –.010 | 32 | +.090 | –.004 |
| 15 | –.254 | +.080 | 33 | +.045 | –.082 |
| 16 | –.211 | +.160 | 34 | –.045 | –.082 |
| 17 | –.123 | +.217 | 35 | –.090 | –.004 |
| 18 | –.045 | +.262 | 36 | –.045 | +.074 |
| | | | 37 | .000 | –.004 |

### INSERT ARRANGEMENT #16-26 / 17-26

| Connector Type: | JT MIL-DTL-38999 Series II | LJT MIL-DTL-38999 Series I | Tri-Start MIL-DTL-38999 Series III | Number of Contacts | Contact Size | Service Rating |
|---|---|---|---|---|---|---|
| Insert Designation: | NA | 17-26 | 17-26 | 26 | 20 | I |

**Contact Locations**
Front face of pin insert shown

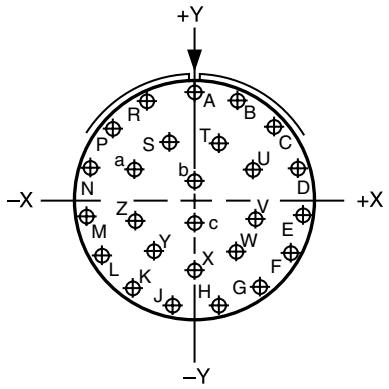


| Contact Hole Locations | | | Contact Hole Locations | | |
|---|---|---|---|---|---|
| Contact Number | Location X Axis | Location Y Axis | Contact Number | Location X Axis | Location Y Axis |
| A | .000 | +.321 | R | –.131 | +.293 |
| B | +.131 | +.293 | S | –.070 | +.177 |
| C | +.239 | +.214 | T | +.070 | +.177 |
| D | +.305 | +.099 | U | +.175 | +.094 |
| E | +.319 | –.034 | V | +.178 | –.036 |
| F | +.278 | –.161 | W | +.119 | –.151 |
| G | +.189 | –.260 | X | .000 | –.203 |
| H | +.067 | –.314 | Y | –.119 | –.151 |
| J | –.067 | –.314 | Z | –.178 | –.036 |
| K | –.189 | –.260 | a | –.175 | +.094 |
| L | –.278 | –.161 | b | .000 | +.065 |
| M | –.319 | –.034 | c | .000 | –.065 |
| N | –.305 | +.099 | | | |
| P | –.239 | +.214 | | | |

All dimensions for reference only. For alternate rotations see page 46 for Series III, page 86 for Series II, and page 114 for Series I.
Note: Shown in this catalog are the most common insert patterns for PCB applications.
For availability of other arrangements, consult Amphenol Aerospace.

# PCB Contacts 38999, Series I LJT, II JT, III TV

## Insert Arrangements

### INSERT ARRANGEMENT #16-35 / 17-35

| Connector Type: | JT MIL-DTL-38999 Series II | LJT MIL-DTL-38999 Series I | Tri-Start MIL-DTL-38999 Series III |
|---|---|---|---|
| Insert Designation: | 16-35 | 17-35 | 17-35 |

| Number of Contacts | Contact Size | Service Rating |
|---|---|---|
| 55 | 22D | M |

**Contact Locations**

Front face of pin insert shown

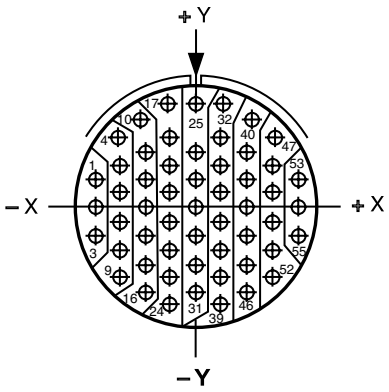


| Contact Hole Locations | | |
|---|---|---|
| Contact Number | Location X Axis | Location Y Axis |
| 1 | –.312 | +.086 |
| 2 | –.312 | –.004 |
| 3 | –.312 | –.094 |
| 4 | –.242 | +.221 |
| 5 | –.234 | +.131 |
| 6 | –.234 | +.041 |
| 7 | –.234 | –.049 |
| 8 | –.234 | –.139 |
| 9 | –.234 | –.229 |
| 10 | –.172 | +.279 |
| 11 | –.156 | +.176 |
| 12 | –.156 | +.086 |
| 13 | –.156 | –.004 |
| 14 | –.156 | –.094 |
| 15 | –.156 | –.184 |
| 16 | –.156 | –.274 |
| 17 | –.089 | +.316 |
| 18 | –.078 | +.221 |
| 19 | –.078 | +.131 |
| 20 | –.078 | +.041 |
| 21 | –.078 | –.049 |
| 22 | –.078 | –.139 |
| 23 | –.078 | –.229 |
| 24 | –.078 | –.319 |
| 25 | .000 | +.329 |
| 26 | .000 | +.176 |
| 27 | .000 | +.086 |

| Contact Hole Locations | | |
|---|---|---|
| Contact Number | Location X Axis | Location Y Axis |
| 28 | .000 | –.004 |
| 29 | .000 | –.094 |
| 30 | .000 | –.184 |
| 31 | .000 | –.274 |
| 32 | +.089 | +.316 |
| 33 | +.078 | +.221 |
| 34 | +.078 | +.131 |
| 35 | +.078 | +.041 |
| 36 | +.078 | –.049 |
| 37 | +.078 | –.139 |
| 38 | +.078 | –.229 |
| 39 | +.078 | –.319 |
| 40 | +.172 | +.279 |
| 41 | +.156 | +.176 |
| 42 | +.156 | +.086 |
| 43 | +.156 | –.004 |
| 44 | +.156 | –.094 |
| 45 | +.156 | –.184 |
| 46 | +.156 | –.274 |
| 47 | +.242 | +.221 |
| 48 | +.234 | +.131 |
| 49 | +.234 | +.041 |
| 50 | +.234 | –.049 |
| 51 | +.234 | –.139 |
| 52 | +.234 | –.229 |
| 53 | +.312 | +.086 |
| 54 | +.312 | –.004 |
| 55 | +.312 | –.094 |

All dimensions for reference only. For alternate rotations see page 46 for Series III, page 86 for Series II, and page 114 for Series I.
Note: Shown in this catalog are the most common insert patterns for PCB applications. For availability of other arrangements, consult Amphenol Aerospace.

Amphenol Aerospace



## Insert Arrangements

### INSERT ARRANGEMENT #18-11 / 19-11

| Connector Type: | JT MIL-DTL-38999 Series II | LJT MIL-DTL-38999 Series I |
|---|---|---|
| Insert Designation: | 18-11 | 19-11 |

| Number of Contacts | Contact Size | Service Rating |
|---|---|---|
| 11 | 16 | II |

**Contact Locations**
Front face of pin insert shown

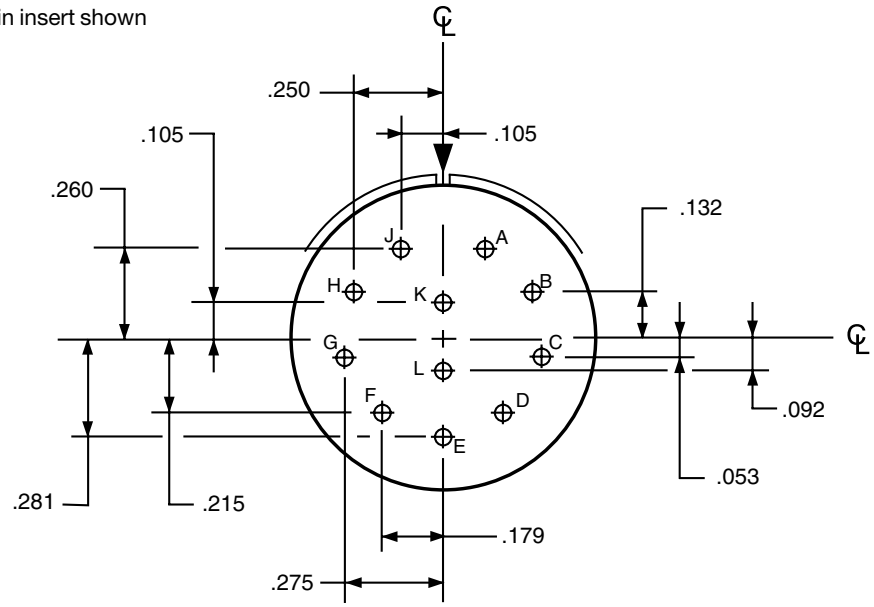


### INSERT ARRANGEMENT #18-32 / 19-32

| Connector Type: | JT MIL-DTL-38999 Series II | LJT MIL-DTL-38999 Series I | Tri-Start MIL-DTL-38999 Series III |
|---|---|---|---|
| Insert Designation: | 18-32 | 19-32 | 19-32 |

| Number of Contacts | Contact Size | Service Rating |
|---|---|---|
| 32 | 20 | I |

**Contact Locations**
Front face of pin insert shown

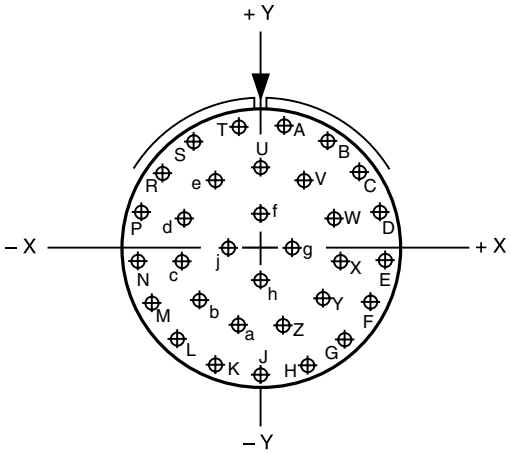


| Contact Hole Locations | | |
|---|---|---|
| Contact Letter | Location X Axis | Location Y Axis |
| A | +.066 | +.353 |
| B | +.189 | +.305 |
| C | +.286 | +.217 |
| D | +.345 | +.098 |
| E | +.357 | –.033 |
| F | +.321 | –.160 |
| G | +.242 | –.265 |
| H | +.130 | –.335 |
| J | .000 | –.359 |
| K | –.130 | –.335 |
| L | –.242 | –.265 |
| M | –.321 | –.160 |
| N | –.357 | –.033 |
| P | –.345 | +.098 |
| R | –.286 | +.217 |
| S | –.189 | +.305 |

| Contact Hole Locations | | |
|---|---|---|
| Contact Letter | Location X Axis | Location Y Axis |
| T | –.066 | +.353 |
| U | .000 | +.230 |
| V | +.124 | +.193 |
| W | +.209 | +.095 |
| X | +.228 | –.033 |
| Y | +.174 | –.151 |
| Z | +.065 | –.221 |
| a | –.065 | –.221 |
| b | –.174 | –.151 |
| c | –.228 | –.033 |
| d | –.209 | +.095 |
| e | –.124 | +.193 |
| f | .000 | +.096 |
| g | +.096 | .000 |
| h | .000 | –.096 |
| j | –.096 | .000 |

All dimensions for reference only. For alternate rotations see page 46 for Series III, page 86 for Series II, and page 114 for Series I.
Note: Shown in this catalog are the most common insert patterns for PCB applications. For availability of other arrangements, consult Amphenol Aerospace.

# PCB Contacts 38999, Series I LJT, II JT, III TV

## Insert Arrangements

### INSERT ARRANGEMENT #18-35 / 19-35

| Connector Type: | JT MIL-DTL-38999 Series II | LJT MIL-DTL-38999 Series I | Tri-Start MIL-DTL-38999 Series III |
|---|---|---|---|
| Insert Designation: | 18-35 | 19-35 | 19-35 |

| Number of Contacts | Contact Size | Service Rating |
|---|---|---|
| 66 | 22D | M |

**Contact Locations**
Front face of pin insert shown

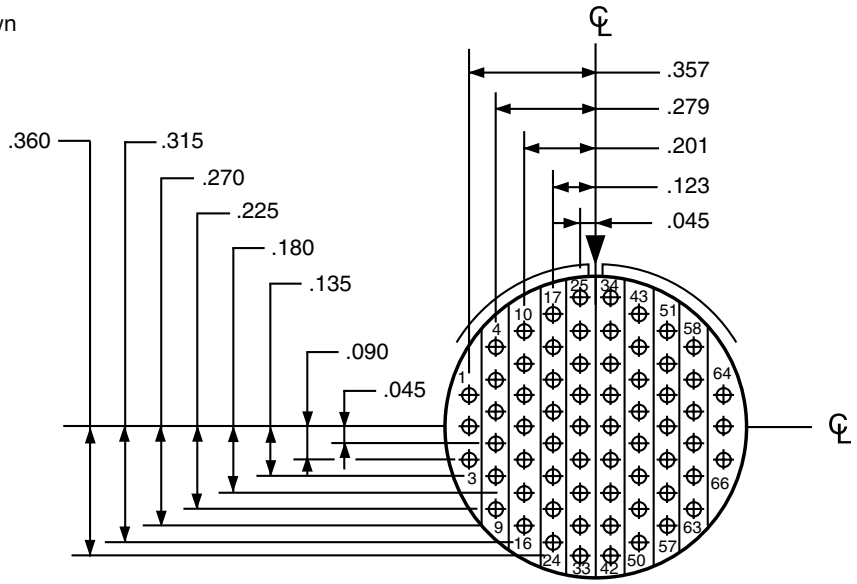


### INSERT ARRANGEMENT #20-27 / 21-27

| Connector Type: | JT MIL-DTL-38999 Series II | LJT MIL-DTL-38999 Series I | Tri-Start MIL-DTL-38999 Series III |
|---|---|---|---|
| Insert Designation: | 20-27 | 21-27 | NA |

| Number of Contacts | Contact Size | Service Rating |
|---|---|---|
| 27 | 20 | I |

**Contact Locations**
Front face of pin insert shown

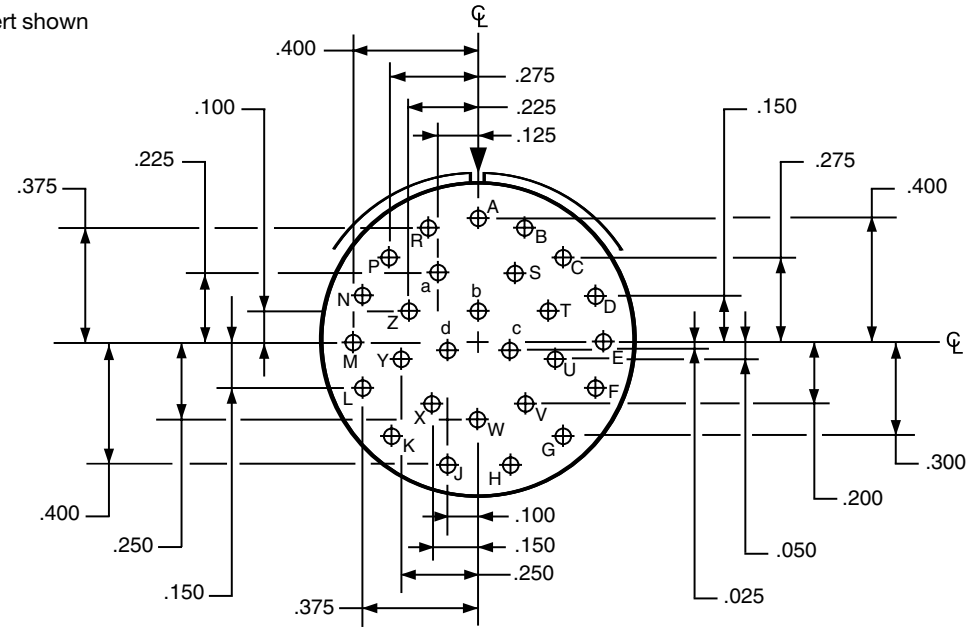


All dimensions for reference only. For alternate rotations see page 46 for Series III, page 86 for Series II, and page 114 for Series I.
Note: Shown in this catalog are the most common insert patterns for PCB applications. For availability of other arrangements, consult Amphenol.

Amphenol Aerospace

## Insert Arrangements

### INSERT ARRANGEMENT #20-35 / 21-35

| Connector Type: | JT MIL-DTL-38999 Series II | LJT MIL-DTL-38999 Series I | Tri-Start MIL-DTL-38999 Series III |
|---|---|---|---|
| Insert Designation: | 20-35 | 21-35 | 21-35 |

| Number of Contacts | Contact Size | Service Rating |
|---|---|---|
| 79 | 22D | M |

**Contact Locations**
Front face of pin insert shown

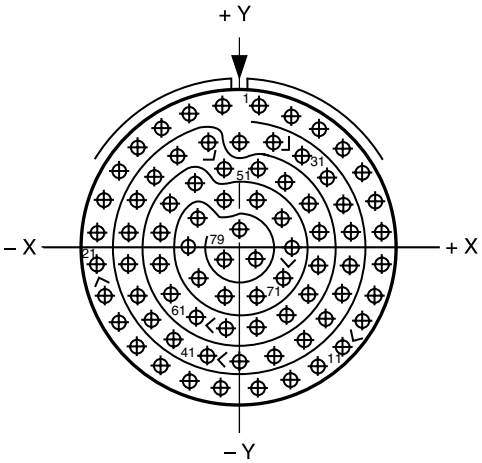


| Contact Hole Locations | | |
|---|---|---|
| Contact Number | Location X Axis | Location Y Axis |
| 1 | +.053 | +.426 |
| 2 | +.146 | +.404 |
| 3 | +.232 | +.362 |
| 4 | +.306 | +.302 |
| 5 | +.365 | +.227 |
| 6 | +.406 | +.141 |
| 7 | +.427 | +.048 |
| 8 | +.427 | –.048 |

| Contact Hole Locations | | |
|---|---|---|
| Contact Number | Location X Axis | Location Y Axis |
| 9 | +.406 | –.141 |
| 10 | +.365 | –.227 |
| 11 | +.306 | –.302 |
| 12 | +.232 | –.362 |
| 13 | +.146 | –.404 |
| 14 | +.053 | –.426 |
| 15 | –.053 | –.426 |
| 16 | –.146 | –.404 |
| 17 | –.232 | –.362 |
| 18 | –.306 | –.302 |
| 19 | –.365 | –.227 |
| 20 | –.406 | –.141 |
| 21 | –.427 | –.048 |
| 22 | –.427 | +.048 |
| 23 | –.406 | +.141 |
| 24 | –.365 | +.227 |
| 25 | –.306 | +.302 |
| 26 | –.232 | +.362 |
| 27 | –.146 | +.404 |
| 28 | –.053 | +.426 |
| 29 | .000 | +.323 |
| 30 | +.098 | +.322 |
| 31 | +.184 | +.280 |
| 32 | +.258 | +.220 |
| 33 | +.311 | +.141 |
| 34 | +.332 | +.048 |
| 35 | +.332 | –.048 |
| 36 | +.311 | –.141 |
| 37 | +.258 | –.220 |
| 38 | +.184 | –.280 |
| 39 | +.098 | –.322 |
| 40 | .000 | –.347 |
| 41 | –.098 | –.322 |
| 42 | –.184 | –.280 |

| Contact Hole Locations | | |
|---|---|---|
| Contact Number | Location X Axis | Location Y Axis |
| 43 | –.258 | –.220 |
| 44 | –.311 | –.141 |
| 45 | –.332 | –.048 |
| 46 | –.332 | +.048 |
| 47 | –.311 | +.141 |
| 48 | –.258 | +.220 |
| 49 | –.184 | +.280 |
| 50 | –.098 | +.322 |
| 51 | –.048 | +.241 |
| 52 | +.048 | +.241 |
| 53 | +.134 | +.199 |
| 54 | +.208 | +.139 |
| 55 | +.237 | +.048 |
| 56 | +.237 | –.048 |
| 57 | +.208 | –.139 |
| 58 | +.134 | –.199 |
| 59 | +.048 | –.241 |
| 60 | –.048 | –.241 |
| 61 | –.134 | –.199 |
| 62 | –.208 | –.139 |
| 63 | –.237 | –.048 |
| 64 | –.237 | +.048 |
| 65 | –.208 | +.139 |
| 66 | –.134 | +.199 |
| 67 | –.048 | +.146 |
| 68 | +.048 | +.146 |
| 69 | +.125 | +.090 |
| 70 | +.155 | .000 |
| 71 | +.125 | –.090 |
| 72 | +.048 | –.146 |
| 73 | –.048 | –.146 |
| 74 | –.125 | –.090 |
| 75 | –.155 | .000 |
| 76 | –.125 | +.090 |
| 77 | .000 | +.053 |
| 78 | +.048 | –.029 |
| 79 | –.048 | –.029 |

All dimensions for reference only. For alternate rotations see page 46 for Series III, page 86 for Series II, and page 114 for Series I.
Note: Shown in this catalog are the most common insert patterns for PCB applications. For availability of other arrangements, consult Amphenol Aerospace.

# PCB Contacts 38999, Series I LJT, II JT, III TV

## Insert Arrangements

### INSERT ARRANGEMENT #20-41 / 21-41

| Connector Type: | JT MIL-DTL-38999 Series II | LJT MIL-DTL-38999 Series I | Tri-Start MIL-DTL-38999 Series III |
|---|---|---|---|
| Insert Designation: | 20-41 | 21-41 | 21-41 |

| Number of Contacts | Contact Size | Service Rating |
|---|---|---|
| 41 | 20 | I |

**Contact Locations**
Front face of pin insert shown

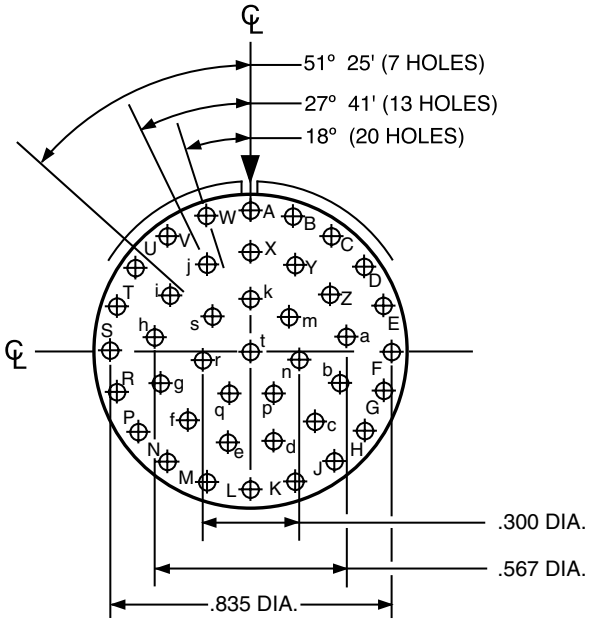


All dimensions for reference only. For alternate rotations see page 46 for Series III, page 86 for Series II, and page 114 for Series I.
Note: Shown in this catalog are the most common insert patterns for PCB applications. For availability of other arrangements, consult Amphenol Aerospace.

Amphenol Aerospace

## Insert Arrangements

### INSERT ARRANGEMENT #22-35 / 23-35

| Connector Type: | JT MIL-DTL-38999 Series II | LJT MIL-DTL-38999 Series I | Tri-Start MIL-DTL-38999 Series III |
|---|---|---|---|
| Insert Designation: | 22-35 | 23-35 | 23-35 |

| Number of Contacts | Contact Size | Service Rating |
|---|---|---|
| 100 | 22D | M |

**Contact Locations**
Front face of pin insert shown

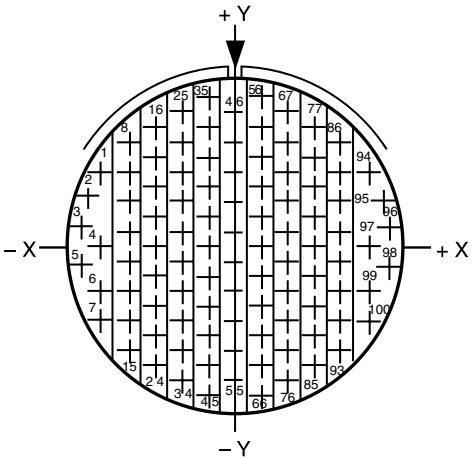


| Contact Hole Locations | | |
|---|---|---|
| Contact Number | Location X Axis | Location Y Axis |
| 1 | –.428 | +.241 |
| 2 | –.467 | +.154 |
| 3 | –.488 | +.061 |
| 4 | –.415 | .000 |
| 5 | –.488 | –.061 |
| 6 | –.428 | –.142 |
| 7 | –.428 | –.237 |
| 8 | –.332 | +.333 |
| 9 | –.332 | +.238 |
| 10 | –.332 | +.143 |
| 11 | –.332 | +.048 |
| 12 | –.332 | –.047 |
| 13 | –.332 | –.142 |
| 14 | –.332 | –.237 |
| 15 | –.332 | –.332 |
| 16 | –.249 | +.380 |
| 17 | –.249 | +.285 |
| 18 | –.249 | +.190 |
| 19 | –.249 | +.095 |

| Contact Hole Locations | | |
|---|---|---|
| Contact Number | Location X Axis | Location Y Axis |
| 20 | –.249 | .000 |
| 21 | –.249 | –.095 |
| 22 | –.249 | –.190 |
| 23 | –.249 | –.285 |
| 24 | –.249 | –.380 |
| 25 | –.166 | +.428 |
| 26 | –.166 | +.333 |
| 27 | –.166 | +.238 |
| 28 | –.166 | +.143 |
| 29 | –.166 | +.048 |
| 30 | –.166 | –.047 |
| 31 | –.166 | –.142 |
| 32 | –.166 | –.237 |
| 33 | –.166 | –.332 |
| 34 | –.166 | –.427 |
| 35 | –.083 | +.475 |
| 36 | –.083 | +.380 |
| 37 | –.083 | +.285 |
| 38 | –.083 | +.190 |
| 39 | –.083 | +.095 |
| 40 | –.083 | .000 |
| 41 | –.083 | –.095 |
| 42 | –.083 | –.190 |
| 43 | –.083 | –.285 |
| 44 | –.083 | –.380 |
| 45 | –.083 | –.475 |
| 46 | .000 | +.428 |
| 47 | .000 | +.333 |
| 48 | .000 | +.238 |
| 49 | .000 | +.143 |
| 50 | .000 | +.048 |
| 51 | .000 | –.047 |
| 52 | .000 | –.142 |
| 53 | .000 | –.237 |
| 54 | .000 | –.332 |
| 55 | .000 | –.427 |
| 56 | +.083 | +.475 |
| 57 | +.083 | +.380 |
| 58 | +.083 | +.285 |
| 59 | +.083 | +.190 |

| Contact Hole Locations | | |
|---|---|---|
| Contact Number | Location X Axis | Location Y Axis |
| 60 | +.083 | +.095 |
| 61 | +.083 | .000 |
| 62 | +.083 | –.095 |
| 63 | +.083 | –.190 |
| 64 | +.083 | –.285 |
| 65 | +.083 | –.380 |
| 66 | +.083 | –.475 |
| 67 | +.166 | +.428 |
| 68 | +.166 | +.333 |
| 69 | +.166 | +.238 |
| 70 | +.166 | +.143 |
| 71 | +.166 | +.048 |
| 72 | +.166 | –.047 |
| 73 | +.166 | –.142 |
| 74 | +.166 | –.237 |
| 75 | +.166 | –.332 |
| 76 | +.166 | –.427 |
| 77 | +.249 | +.380 |
| 78 | +.249 | +.285 |
| 79 | +.249 | +.190 |
| 80 | +.249 | +.095 |
| 81 | +.249 | .000 |
| 82 | +.249 | –.095 |
| 83 | +.249 | –.190 |
| 84 | +.249 | –.285 |
| 85 | +.249 | –.380 |
| 86 | +.332 | +.333 |
| 87 | +.332 | +.238 |
| 88 | +.332 | +.143 |
| 89 | +.332 | +.048 |
| 90 | +.332 | –.047 |
| 91 | +.332 | –.142 |
| 92 | +.332 | –.237 |
| 93 | +.332 | –.332 |
| 94 | +.428 | +.241 |
| 95 | +.467 | +.154 |
| 96 | +.488 | +.061 |
| 97 | +.415 | .000 |
| 98 | +.488 | –.061 |
| 99 | +.428 | –.142 |
| 100 | +.428 | –.237 |

All dimensions for reference only. For alternate rotations see page 46 for Series III, page 86 for Series II, and page 114 for Series I.
Note: Shown in this catalog are the most common insert patterns for PCB applications. For availability of other arrangements, consult Amphenol Aerospace.

# PCB Contacts 38999, Series I LJT, II JT, III TV

## Insert Arrangements

### INSERT ARRANGEMENT #22-55 / 23-55

| Connector Type: | JT MIL-DTL-38999 Series II | LJT MIL-DTL-38999 Series I | Tri-Start MIL-DTL-38999 Series III |
|---|---|---|---|
| Insert Designation: | 22-55 | 23-55 | 23-55 |

| Number of Contacts | Contact Size | Service Rating |
|---|---|---|
| 55 | 20 | I |

**Contact Locations**
Front face of pin insert shown

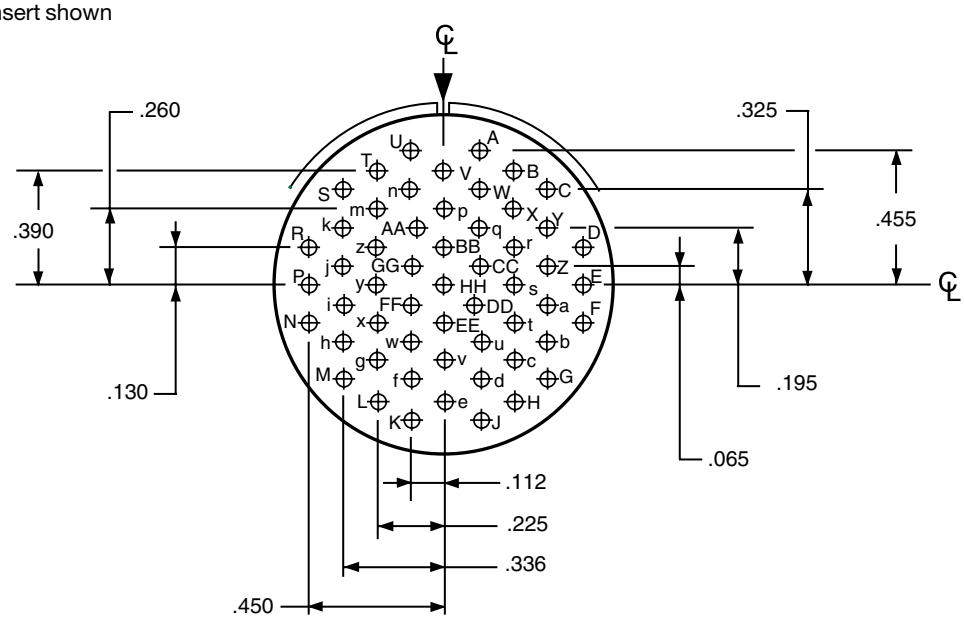


### INSERT ARRANGEMENT #24-31 / 25-31

| Connector Type: | JT MIL-DTL-38999 Series II | LJT MIL-DTL-38999 Series I | Tri-Start MIL-DTL-38999 Series III |
|---|---|---|---|
| Insert Designation: | 24-31 | NA | NA |

| Number of Contacts | Contact Size | Service Rating |
|---|---|---|
| 31 | 16 | I |

**Contact Locations**
Front face of pin insert shown

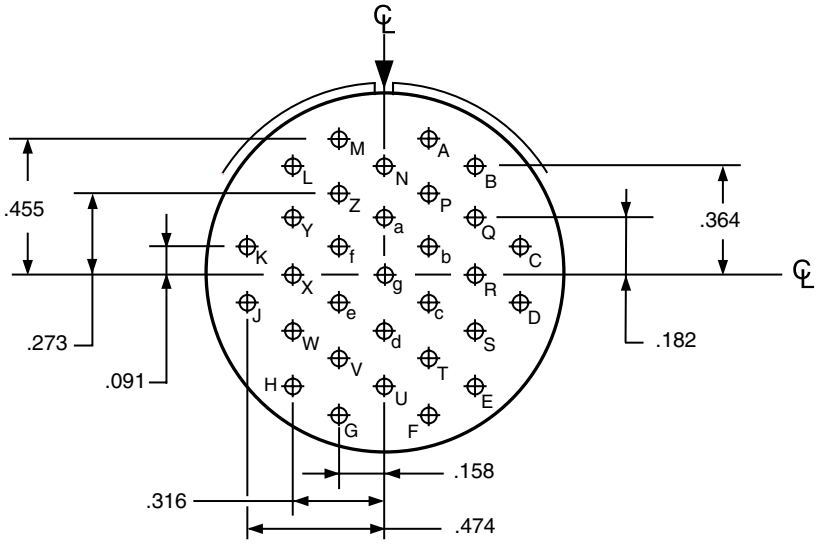


All dimensions for reference only. For alternate rotations see page 46 for Series III, page 86 for Series II, and page 114 for Series I.
Note: Shown in this catalog are the most common insert patterns for PCB applications. For availability of other arrangements, consult Amphenol Aerospace.

Amphenol Aerospace



## INSERT ARRANGEMENT #24-35 / 25-35

| Connector Type: | JT MIL-DTL-38999 Series II | LJT MIL-DTL-38999 Series I | Tri-Start MIL-DTL-38999 Series III |
|---|---|---|---|
| Insert Designation: | 24-35 | 25-35 | 25-35 |

| Number of Contacts | Contact Size | Service Rating |
|---|---|---|
| 128 | 22D | M |

**Contact Locations**
Front face of pin insert shown

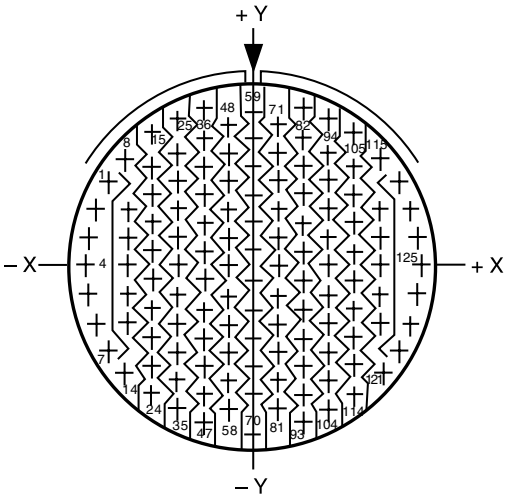


| Contact Hole Locations | | |
|---|---|---|
| Contact Number | Location X Axis | Location Y Axis |
| 1 | –.479 | +.279 |
| 2 | –.520 | +.190 |
| 3 | –.546 | +.095 |
| 4 | –.555 | .000 |
| 5 | –.546 | –.095 |
| 6 | –.520 | –.190 |
| 7 | –.479 | –.279 |
| 8 | –.424 | +.357 |
| 9 | –.415 | +.190 |
| 10 | –.415 | +.095 |
| 11 | –.415 | .000 |
| 12 | –.415 | –.095 |
| 13 | –.415 | –.190 |
| 14 | –.424 | –.357 |
| 15 | –.332 | +.444 |
| 16 | –.332 | +.332 |
| 17 | –.332 | +.237 |
| 18 | –.332 | +.142 |
| 19 | –.332 | +.047 |
| 20 | –.332 | –.047 |
| 21 | –.332 | –.142 |
| 22 | –.332 | –.237 |
| 23 | –.332 | –.332 |
| 24 | –.332 | –.427 |
| 25 | –.249 | +.496 |
| 26 | –.249 | +.380 |
| 27 | –.249 | +.285 |
| 28 | –.249 | +.190 |

| Contact Hole Locations | | |
|---|---|---|
| Contact Number | Location X Axis | Location Y Axis |
| 29 | –.249 | +.095 |
| 30 | –.249 | .000 |
| 31 | –.249 | –.095 |
| 32 | –.249 | –.190 |
| 33 | –.249 | –.285 |
| 34 | –.249 | –.380 |
| 35 | –.249 | –.475 |
| 36 | –.160 | +.531 |
| 37 | –.166 | +.427 |
| 38 | –.166 | +.332 |
| 39 | –.166 | +.237 |
| 40 | –.166 | +.142 |
| 41 | –.166 | +.047 |
| 42 | –.166 | –.047 |
| 43 | –.166 | –.142 |
| 44 | –.166 | –.237 |
| 45 | –.166 | –.332 |
| 46 | –.166 | –.427 |
| 47 | –.166 | –.522 |
| 48 | –.083 | +.475 |
| 49 | –.083 | +.380 |
| 50 | –.083 | +.285 |
| 51 | –.083 | +.190 |
| 52 | –.083 | +.095 |
| 53 | –.083 | .000 |
| 54 | –.083 | –.095 |
| 55 | –.083 | –.190 |
| 56 | –.083 | –.285 |
| 57 | –.083 | –.380 |
| 58 | –.083 | –.475 |
| 59 | .000 | +.522 |
| 60 | .000 | +.427 |
| 61 | .000 | +.332 |
| 62 | .000 | +.237 |
| 63 | .000 | +.142 |
| 64 | .000 | +.047 |
| 65 | .000 | –.047 |
| 66 | .000 | –.142 |
| 67 | .000 | –.237 |
| 68 | .000 | –.332 |
| 69 | .000 | –.427 |
| 70 | .000 | –.555 |
| 71 | +.083 | +.475 |
| 72 | +.083 | +.380 |
| 73 | +.083 | +.285 |
| 74 | +.083 | +.190 |
| 75 | +.083 | +.095 |
| 76 | +.083 | .000 |
| 77 | +.083 | –.095 |
| 78 | +.083 | –.190 |

| Contact Hole Locations | | |
|---|---|---|
| Contact Number | Location X Axis | Location Y Axis |
| 79 | +.083 | –.285 |
| 80 | +.083 | –.380 |
| 81 | +.083 | –.475 |
| 82 | +.160 | +.531 |
| 83 | +.166 | +.427 |
| 84 | +.166 | +.332 |
| 85 | +.166 | +.237 |
| 86 | +.166 | +.142 |
| 87 | +.166 | +.047 |
| 88 | +.166 | –.047 |
| 89 | +.166 | –.142 |
| 90 | +.166 | –.237 |
| 91 | +.166 | –.332 |
| 92 | +.166 | –.427 |
| 93 | +.166 | –.522 |
| 94 | +.249 | +.496 |
| 95 | +.249 | +.380 |
| 96 | +.249 | +.285 |
| 97 | +.249 | +.190 |
| 98 | +.249 | +.095 |
| 99 | +.249 | .000 |
| 100 | +.249 | –.095 |
| 101 | +.249 | –.190 |
| 102 | +.249 | –.285 |
| 103 | +.249 | –.380 |
| 104 | +.249 | –.475 |
| 105 | +.332 | +.444 |
| 106 | +.332 | +.332 |
| 107 | +.332 | +.237 |
| 108 | +.332 | +.142 |
| 109 | +.332 | +.047 |
| 110 | +.332 | –.047 |
| 111 | +.332 | –.142 |
| 112 | +.332 | –.237 |
| 113 | +.332 | –.332 |
| 114 | +.332 | –.427 |
| 115 | +.424 | +.357 |
| 116 | +.415 | +.190 |
| 117 | +.415 | +.095 |
| 118 | +.415 | .000 |
| 119 | +.415 | –.095 |
| 120 | +.415 | –.190 |
| 121 | +.424 | –.357 |
| 122 | +.479 | +.279 |
| 123 | +.520 | +.190 |
| 124 | +.546 | +.095 |
| 125 | +.555 | .000 |
| 126 | +.546 | –.095 |
| 127 | +.520 | –.190 |
| 128 | +.479 | –.279 |

All dimensions for reference only. For alternate rotations see page 46 for Series III, page 86 for Series II, and page 114 for Series I.
Note: Shown in this catalog are the most common insert patterns for PCB applications. For availability of other arrangements, consult Amphenol Aerospace.

# PCB Contacts 38999, Series I LJT, II JT, III TV

## Insert Arrangements

### INSERT ARRANGEMENT #24-61 / 25-61

| Connector Type: | JT MIL-DTL-38999 Series II | LJT MIL-DTL-38999 Series I | Tri-Start MIL-DTL-38999 Series III |
|---|---|---|---|
| Insert Designation: | 24-61 | 25-61 | 25-61 |

| Number of Contacts | Contact Size | Service Rating |
|---|---|---|
| 61 | 20 | I |

**Contact Locations**

Front face of pin insert shown

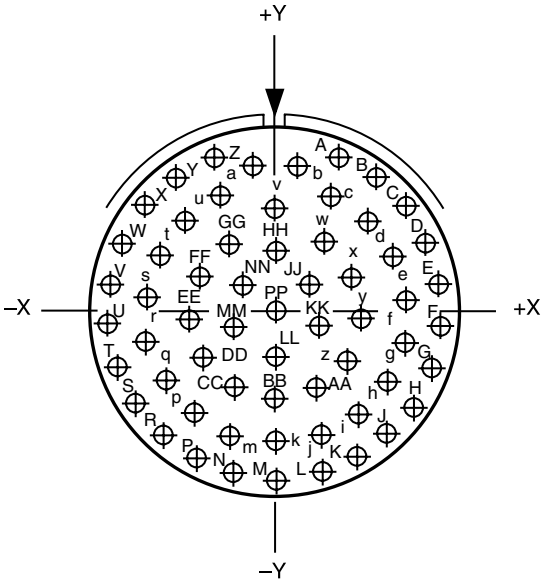


| Contact Hole Locations | | |
|---|---|---|
| Contact Number | Location X Axis | Location Y Axis |
| A | +.196 | +.500 |
| B | +.314 | +.435 |
| C | +.413 | +.343 |
| D | +.485 | +.230 |
| E | +.527 | +.101 |
| F | +.536 | –.030 |
| G | +.511 | –.164 |
| H | +.454 | –.287 |
| J | +.368 | –.391 |
| K | +.259 | –.470 |
| L | +.134 | –.519 |
| M | .000 | –.537 |
| N | –.134 | –.519 |
| P | –.259 | –.470 |
| R | –.368 | –.391 |
| S | –.454 | –.287 |
| T | –.511 | –.164 |
| U | –.536 | –.030 |
| V | –.527 | +.101 |
| W | –.485 | +.230 |
| X | –.413 | +.343 |
| Y | –.314 | +.435 |
| Z | –.196 | +.500 |
| a | –.068 | +.454 |
| b | +.068 | +.454 |
| c | +.173 | +.363 |
| d | +.285 | +.283 |
| e | +.362 | +.175 |
| f | +.399 | +.046 |
| g | +.392 | –.088 |

| Contact Hole Locations | | |
|---|---|---|
| Contact Number | Location X Axis | Location Y Axis |
| h | +.341 | –.213 |
| i | +.251 | –.314 |
| j | +.133 | –.379 |
| k | .000 | –.402 |
| m | –.133 | –.379 |
| n | –.251 | –.314 |
| p | –.341 | –.213 |
| q | –.392 | –.088 |
| r | –.399 | +.046 |
| s | –.362 | +.175 |
| t | –.285 | +.283 |
| u | –.173 | +.363 |
| v | .000 | +.338 |
| w | +.147 | +.223 |
| x | +.237 | +.122 |
| y | +.267 | –.010 |
| z | +.228 | –.139 |
| AA | +.131 | –.233 |
| BB | .000 | –.267 |
| CC | –.131 | –.233 |
| DD | –.228 | –.139 |
| EE | –.267 | –.010 |
| FF | –.237 | +.122 |
| GG | –.147 | +.223 |
| HH | .000 | +.200 |
| JJ | +.105 | +.094 |
| KK | +.135 | –.041 |
| LL | .000 | –.132 |
| MM | –.135 | –.041 |
| NN | –.105 | +.094 |
| PP | .000 | .000 |

All dimensions for reference only.For alternate rotations see page 46 for Series III, page 86 for Series II, and page 114 for Series I.
Note: Shown in this catalog are the most common insert patterns for PCB applications. For availability of other arrangements, consult Amphenol Aerospace.

# Contact Ratings/ Service Ratings



## CONTACT RATING FOR TV III, HD, JT II, LJT I, SJT

| Contact Size | Test Current (Amps) | | Maximum Millivolt Drop Crimp* | Maximum Millivolt Drop |
|---|---|---|---|---|
| | Crimp | Hermetic | | Hermetic* |
| 23 | 5 | 3 | 73 | 85 |
| 22M | 3 | 2 | 45 | 60 |
| 22D | 5 | 3 | 73 | 85 |
| 22 | 5 | 3 | 73 | 85 |
| 20 | 7.5 | 5 | 55 | 60 |
| 16 | 13 | 10 | 49 | 85 |
| 12 | 23 | 17 | 42 | 85 |
| 10 (Power) | 33 | NA | 33 | NA |
| 8 (Power) | 46 | NA | 26 | NA |
| 4 | 80 | NA | 23 | NA |
| 0 | 150 | NA | 21 | NA |

*When tested using silver plated wire.

| Contact Size | Crimp Well Data | | Solder Well Data | |
|---|---|---|---|---|
| | Well Diameter | Normal Well Depth | Well Diameter | Nominal Well Depth |
| 23 | .0345 ± .0010 | .141 | .0345 ± .0010 | .130 |
| 22M | .028 ± .001 | .141 | .029 +.004 – .000 | |
| 22D | .0345 ± .0010 | .141 | .036 +.004 -.000 | .094 |
| 22 | .0365 ± .0010 | .141 | .036 +.004 -.000 | .094 |
| 20 | .047 ± .001 | .209 | .044 +.004 -.004 | .125 |
| 16 | .067 ± .001 | .209 | .078 +.000 -.004 | .141 |
| 12 | .100 ± .002 | .209 | .116 +.004 -.002 | .141 |
| 10 (Power) | .137 ± .002 | .355 | NA | NA |
| 8 | .181 ± .002 | .490 | NA | NA |
| 4 | .281 ± .002 | .490 | NA | NA |
| 0 | .453 ± .002 | .585 | NA | NA |

## MIL-DTL-38999 SERIES III STANDARD 500 CYCLE CONTACTS FOR TV AND CTV, P & S

| Contact Size | TV/CTV Pins | | TV/CTV Sockets | |
|---|---|---|---|---|
| | Military No. | Supersedes | Military No. | Supersedes |
| 8 (Coax)* | M39029/60-367 | MS27536 | M39029/59-366 | MS27535 |
| 8 (Power) | Contact Factory | " | " | " |
| 8 (Twinax) | M39029/90-529** | N/A | M39029/91-530 | N/A |
| 10 (Power) | M39029/58-528 | N/A | M39029/56-527 | N/A |
| 12 | M39029/58-365 | MS27493-12 | M39029/56-353 | MS27490-12 |
| 16 | M39029/58-364 | MS27493-16 | M39029/56-352 | MS27490-16 |
| 20 | M39029/58-363 | MS27493-20 | M39029/56-351 | MS27490-20 |
| 22D | M39029/58-360 | MS27493-22D | M39029/56-348 | MS27490-22D |
| 4 | N/A | N/A | N/A | N/A |
| 0 | N/A | N/A | N/A | N/A |

Above part numbers include standard 500 cycle finish designation - gold plating over suitable underplate in accordance with SAE AS39029. For other finish variations, consult Amphenol Aerospace.

*For use with RG180B/U and RG195A/U cable. For other size 8 coax or optional sizes 12 and 16 coax contacts available for use in Tri-Start connectors, see High Speed catalog or consult Amphenol Aerospace.

## MIL-DTL-38999 SERIES III 1500 CYCLE CONTACTS, CLASSES H & J

| Contact Size | CTV Pins | | | CTV Sockets | | |
|---|---|---|---|---|---|---|
| | Commercial No. | Military No. | Supersedes | Commercial No. | Military No. | Supersedes |
| 12 | 10-597072-2X | M39029/107-623 | – | 10-597073-2X | M39029/106-617 | – |
| 16 | 10-597068-2X | M39029/107-622 | – | 10-597069-2X | M39029/106-616 | – |
| 20 | 10-597064-2X | M39029/107-621 | – | 10-597065-2X | M39029/106-615 | – |
| 22D | 10-597058-3X | M39029/107-620 | – | 10-597061-2X | M39029/106-614 | – |

# MIL-DTL-38999, Series I LJT, II JT, III TV

## Thermocouple Contacts/Sealing Plugs

### MIL-DTL-38999 SERIES II JT/ SERIES I LJT/SJT SERIES CRIMP CONTACTS

| Contact Size | JT/LJT/SJT Pins MS No. | JT Socket MS No. | LJT/SJT Sockets MS No. |
|---|---|---|---|
| 8 (Coax)* | M39029/60-367 | NA | M39029/59-366 |
| 8 (Twinax) | M39029/90-529** | NA | M39029/91-530 |
| 10 (Power) | M39029/58-528 | NA | M39029/56-527 |
| 12 | M39029/58-365 | M39029/57-359 | M39029/56-353 |
| 16 | M39029/58-364 | M39029/57-358 | M39029/56-352 |

| Contact Size | JT/LJT Pins MS No. | JT Socket MS No. | LJT/SJT Sockets MS No. |
|---|---|---|---|
| 20 | M39029/58-363 | M39029/57-357 | M39029/56-351 |
| 22 | M39029/58-362 | M39029/57-356 | M39029/56-350 |
| 22M | M39029/58-361 | M39029/57-355 | M39029/56-349 |
| 22D | M39029/58-360 | M39029/57-354 | M39029/56-348 |

### MIL-DTL-38999 SERIES II JT/ I LJT THERMOCOUPLE CONTACTS

| Contact Size | Material | JT/LJT Pins | JT Sockets | LJT Sockets |
|---|---|---|---|---|
| 20 | Chromel | 10-407862-310 | 10-407863-310 | 10-407236-310 |
| | Alumel | 10-407862-320 | 10-407863-320 | 10-407865-320 |
| | Iron | 10-407862-335 | 10-407863-335 | 10-407865-335 |
| | Constantan | 10-407862-342 | 10-407863-342 | 10-407865-342 |

Partial Listing. If you do not see the contact for your application, consult Amphenol Aerospace.

### MIL-DTL-38999 SERIES II JT/ I LJT THERMOCOUPLE CONTACTS PYLE VERSION

| Contact Size | Pins (II JT/I LJT) | | Sockets (LJT) | | Material |
|---|---|---|---|---|---|
| | Spec Number | Pyle Number | Spec Number | Pyle Number | |
| 22D | M39029/87-472 | T3-4022-10P | M39029/88-484 | T3-4122-10P | CHROMEL |
| 22D | M39029/87-471 | T3-4022-10R | M39029/88-483 | T3-4122-10R | ALUMEL |
| 20 | M39029/87-476 | T3-4020-10P | M39029/88-488 | TS-4120-10P | CHROMEL |
| 20 | M39029/87-475 | T3-4020-10R | M39029/88-487 | T3-4120-10R | ALUMEL |
| 16 | M39029/87-480 | T3-4016-10P | M39029/88-492 | T3-4116-10P | CHROMEL |
| 16 | M39029/87-479 | T3-4016-10R | M39029/88-491 | T3-4116-10R | ALUMEL |

Above part numbers include standard finish designation - gold plating over suitable underplate in accordance with MIL-DTL-39029. For other finishes, consult Amphenol Aerospace. Note: 22M and 22D contacts are interchangeable. *For use with RG180B/U and RG195A/U cable. For other size 8 coax or optional sizes 12 and 18 coax contacts available for use in JT/LJT connectors, Refer to the High Speed Catalog. ** For use with 17/M176-00002 cable.

### MIL-DTL-38999 SERIES III SEALING PLUGS

| Contact Size | Commercial No. | Military No. |
|---|---|---|
| 8 (Coax) | 10-482099-8 | N/A |
| 8 (Twinax) | T3-4008-59P | N/A |
| 8 (Power) | 10-405996-83 | MS27488-8-3 |
| 10 (Power) | T3-4010-59P | M85049/81-10 |
| 12 | 10-405996-122 | MS27488-12-2 |
| 16 | 10-405996-162 | MS27488-16-2 |
| 20 | 10-405996-202 | MS27488-20-2 |
| 22D | 10-405996-222 | MS27488-22-2 |
| 4 | 10-405996-43 | MS27488-4-3 |
| 0 | 10-405996-03 | MS27488-0-3 |

### MIL-DTL-38999 SERIES II JT/ I LJT SEALING PLUGS

| Contact Size | Commercial No. | Military No. |
|---|---|---|
| 8 (Coax) | 10-482099-8 | MS27488-8 |
| 8 (Twinax) | T3-4008-59P | N/A |
| 10 (Power) | 10-576225 | N/A |
| 12 | 10-405996-122 | MS27488-12-2 |
| 16 | 10-405996-162 | MS27488-16-2 |
| 20 | 10-405996-202 | MS27488-20-2 |
| 22 | 10-405996-222 | MS27488-22-2 |
| 22M | 10-405996-222 | MS27488-22-2 |
| 22D | 10-405996-222 | MS27488-22-2 |

### SJT SEALING PLUGS

| Contact Size | Commercial No. |
|---|---|
| 8 (Coax) | 10-482099-8 |
| 8 (Twinax) | 10-482099-8 |
| 10 (Power) | NA |
| 12 | 10-405996-012 Yellow |
| 16 | 10-405996-016 Blue |
| 20 | 10-405996-020 Red |
| 22 | 10-405996-022 Black |
| 22M | 10-405996-022 Black |
| 22D | 10-405996-022 Black |

** For use with M17/M176-00002 cable.
† Optional design - see slash sheet MS39029.
For other contact options available for use in Tri-Start connectors (wire wrap, thermocouple, fiber optic), consult Amphenol.

## SERVICE RATING**

| Service Rating | Suggested Oper. Voltage (Sea Level) | | Test Voltage (Sea Level) | Test Voltage 50,000 Ft. | Test Voltage 70,000 Ft | Test Voltage 110,000 Ft. |
|---|---|---|---|---|---|---|
| | AC (RMS) | DC | | | | |
| M | 400 | 500 | 1300 VRMS | 550 VRMS | 350 VRMS | 200 VRMS |
| N | 300 | 450 | 1000 VRMS | 400 VRMS | 260 VRMS | 200 VRMS |
| I | 600 | 850 | 1800 VRMS | 600 VRMS | 400 VRMS | 200 VRMS |
| II | 900 | 1250 | 2300 VRMS | 800 VRMS | 500 VRMS | 200 VRMS |

** Please note that the establishment of electrical safety factors is left entirely in the designer's hands, since they are in the best position to know what peak voltage, switching surges, transients, etc. can be expected in a particular circuit.

## FINISH DATA MIL-DTL-38999, TRI-START, SERIES III TV

| ALUMINUM SHELL COMPONENTS NON-HERMETIC* | | |
|---|---|---|
| Finish | Service Class | |
| | Military | Commercial |
| Anodic Coating (Non-Conductive) | C* | RX** |
| Electroless Nickel | F (Metal)* | RF |
| | M (Composite) | |
| Olive Drab Cadmium Plate Nickel Base | W (Metal)* | RW |
| | J (Composite) | |
| Stainless Steel with Nickel Plate (non-firewall) | L | |
| Stainless Steel with Nickel Plate (firewall) | S | RS |
| Stainless Steel | K | RK |
| Durmalon plated | T* | DT |
| Zinc-Nickel Plated | Z* | DZ |
| Electroless Nickel Space Grade | G | |

**Add Suffix (005) to part number.

| HERMETIC SHELL COMPONENTS | | |
|---|---|---|
| Material/Finish | Service Class | |
| | Military | Commercial |
| Stainless Steel | Y | Y |
| Stainless Steel with Nickel Plate | N | YN |

## FINISH DATA MIL-DTL-38999, SERIES I LJT, II JT

| ALUMINUM SHELL COMPONENTS NON-HERMETIC | | | | | |
|---|---|---|---|---|---|
| Finish | Suffix | | Finish Plus "SR" Suffix | Indicated Finish Standard for JT Types Listed Below | Indicated Finish Standard for LJT Types Listed Below |
| | Military | Commercial | | | |
| Cadmium Plated Nickel Base | MS (A) | – | (SR) | JT/JTG/JTL/JTP | LJT/LJTP |
| Anodic Coating (Alumilite) | MS (C) | (005) | (300) | JTS/JTPS/JTLS | LJTPS/LJTS |
| Chromate Treated (Iridite 14-2) | | (011) | (344) | JTN/JTPN/JTLN | LJTN/LJTPN |
| Olive Drab Cadmium Plate Nickel Base | MS (B) | (014) | (386) | | |
| Electroless Nickel | MS (F) | (023) | (424) | | |
| Nickel-PTFE Durmalon | | (038) | | | |
| Space Grade | | (453) | | | |

| HERMETIC CONNECTORS | | | | |
|---|---|---|---|---|
| Finish | Suffix | | Indicated Finish Standard for JT Types Listed Below | Indicated Finish Standard for LJT Types Listed Below |
| | Military | Commercial | | |
| Carbon Steel Shell<br>Tin Plated Shell and Contacts | | | JT( )H / JT( )Y<br>JTL( )H / JTL( )Y | LJT( )Y<br>LJT( )H |
| Carbon Steel Shell Tin Plated Shell and Gold Plated Contacts | MS (D) | | | |
| Stainless Steel Shell Gold Plated Contacts | MS (E) | (162) | JTS( )Y<br>JTLS( )Y | LJTS( )Y |

# Amphenol RoHS Compliant Platings

## Alternative to Cadmium

### DURMALON™

Amphenol's Answer to EU RoHS/ELV/Cadmium Free Restrictions

Commercial, industrial & military markets are rapidly moving away from restricted materials such as Cadmium (Cd) & Hexavalent Chromium (Cr(VI)). Both of these restricted materials are toxic and are known carcinogens. Amphenol is offering an alternative finish that complies with all customer requirements tied to these specifications.

MIL-DTL-38999, Rev L has established new service classes for alternative finishes addressing these requirements for Cadmium replacement. Amphenol is using this and European Union Directive 2002/95/EC RoHS (Regulation of Hazardous Substances) as a guide to qualification for all domestic, global, commercial, industrial, & military specifications requiring the reduction or elimination of these restricted materials.

Amphenol has qualified Durmalon, with internal part number coding "DT" finish, which meets or exceeds the 38999 designated class "T" finish, Nickel Fluorocarbon Polymer. Durmalon is also EU RoHS compliant and is Cadmium free, Lead free, and Hexavalent Chromium free.

We also offer additional platings such as "DX", (Durmalon, heavy duty final plate) to support JSF, F-35 program. The DX plating is intended to meet higher corrosion Sulfur Dioxide (SO2)/salt fog requirements of JSF.

Cadmium has been applied to numerous components of land, sea and air weapon systems and NASA systems for many years as it provides sacrificial corrosion protection and excellent lubricity for threaded applications.

The Defense Logistics Agency (DLA) has added the following cadmium alternative finishes to MIL-DTL-38999, Rev L (and other connector specs):

- Nickel Fluorocarbon Polymer
- Zinc-Nickel

### AMPHENOL'S DURMALON™

Durmalon, like Olive-Drab Cadmium plating (Class W), meets 500 hours of dynamic salt spray, combined with 500 mating cycles and meets specified millivolt drop shell-to-shell conductivity. Durmalon also meets a 200° C temperature rating. Durmalon has been proven to meet this requirement as well as Potassium Formate-Deicer fluid testing performed by Boeing.

DURMALON™
Alternative to Cadmium

### APPLICATIONS

Interest for non-hazardous alternative finishes is gaining momentum & many customers are currently using Durmalon for a broad number of applications. Durmalon combines the unique lubrication and anti-wetting properties of PTFE with corrosion resistance, high conductivity and EU RoHS compliance in a non-reflective finish.

### TESTING

Amphenol Aerospace has performed extensive testing on numerous alternative platings with the most consistent performer being the Durmalon.
For specific applications please contact Amphenol Aerospace.

### BLACK ZINC NICKEL

Black Zinc Nickel is Amphenol's 2nd RoHS Compliant Plating Alternative to Cadmium

Amphenol is now offering a new RoHS compliant alternative to Cadmium. Black Zinc Nickel is a non-reflective and conductive black finish approved for 500 hrs salt spray making it an excellent choice for harsh environments. Black Zinc Nickel has been qualified by the DLA, with internal part number coding "DZ" finish, which meets or exceeds the 38999 designated class "Z" finish. Black Zinc Nickel is compatible with other platings and available on a wide variety of connectors and accessories including all MIL-DTL-38999 Series III connectors.

### APPLICATIONS

Interest for non-hazardous alternative finishes are gaining momentum & many customers are currently using Black Zinc Nickel for a broad number of applications. Black Zinc Nickel is typically used on applications for commercial aerospace and military defense, who are now moving away from toxic Cadmium to more environmentally friendly options.

### TESTING

Amphenol Aerospace has performed extensive testing on numerous alternative platings including Black Zinc Nickel. For specific applications please contact Amphenol Aerospace.

| Requirements | Cadmium | Durmalon™ | Black Zinc Nickel |
|---|---|---|---|
| **Coupling Torque** Post 500 hr. salt | ■ | ■ | ■ |
| **Shell to Shell Conductivity** <2.5 millivolts | ■ | ■ | ■ |
| **Cycles of Durability** 500 mates | ■ | ■ | ■ |
| **Salt Spray** Dynamic 500 hours | ■ | ■ | ■ |
| **Temperature Rating** 175° C | ■ | ■ | ■ |
| Non-Reflective | ■ | ■ | ■ |
| EU RoHS/ELV Compliant* | | ■ | ■ |
| Non-Magnetic | ■ | ■ | ■ |
| De-icing Fluid** | | ■ | ■ |

* Meets EU RoHS/ELV maximum concentration values (MCV) of 1000 ppm (0.1% w/w) or (0.01% w/w) per homogenous material.

** Potassium Formate/Acetate based de-icing fluids.

Note: Specifications are subject to change without notice.

# MIL-DTL-38999, Series III, TV

Amphenol Aerospace

# A

## TABLE OF CONTENTS FOR SECTION A


Combined MIL-DTL-38999 Series I, II, III
Shell Size & Insert Arrangements Availability . . . . . 2-5
Insert Arrangement Drawings . . . . . 6-13
PCB Insert Arrangements . . . . . 14-28
Contact - Ratings, Service Ratings, Finish Data . . . . . 29-31
Amhenol RoHS Compliant Plating . . . . . 32

MIL-DTL-38999, Series III TV
Performance, Options . . . . . 34, 35
Test Data . . . . . 36
Weight Comparison (Composite vs. Metal) . . . . . 37
Dualok . . . . . 38
HD38999, High Density . . . . . 39
Custom . . . . . 40
Configurator . . . . . 41
How to Order (Military & Commercial) . . . . . 42-46
How to Order (Boeing BACC63) . . . . . 47

**TV SHELL STYLES:**
Crimp Wall Mounting Receptacle TVP00R (D389999/20) /CTVP00R (Military D38999/20) . . . . . 48
Crimp Box Mounting Receptacle TVP02R / CTVP02R . . . 49
Line Receptacle TV01, TVS01, CTV01, CTVS01 . . . . . 50
Crimp Jam Nut Receptacle TV07R (D38999/24) / CTV07R (Military D38999/24) . . . . . 51
Straight Plug TV06, TVS06, CTV06, CTVS06 (Military D38999/26). . . . . 52
Crimp Flange Mounting Plug TV09R . . . . . 53
Dualok Plug/Receptacle TV56, TVS56, CTV56, CTVS56. . . 54
Crimp CLUTCH-LOK™ Straight Plug for High Vibration TV26/MTV26 . . . . . 55

**PCB:**
PCB Wall Mounting, Back Panel TVP00, TVPS00 . . . . . 56
PCBWall Mounting, Back Panel, Clinch Nuts, TVP10, TVPS10 57
PCB Wall Mounting, Double Flange, TVP40, TVPS40 . . . . 58
PCB Box Mounting Receptacle, TVP02, TVPS02 . . . . . 59
PCB Box Mounting Receptacle, Clinch Nuts, TVP12, TVPS12 60
PCB Jam Nut Receptacle, TV07, TVS07 . . . . . 61
PCB Jam Nut Receptacle, Double Flange, TVP47, TVPS47 . 62
PCB Hermetic Box, Jam Nut, Solder , Weld Mounting. . . 63-66

**HERMETIC:**
Hermetic Box Mounting TVPS02Y(D38999/21) . . . . .67
Hermetic Jam Nut Receptacle TVS07Y (D38999/23) . .68
Hermetic Solder Mounting TVSIY (D38999/25) . . . .69
Hermetic Weld Mounting TVSHIY (D38999/27) . . . .69

**BREAKAWAY:**
Breakaway Fail-Safe Connectors . . . . . .70
How to Order Breakaway (Military) . . . . . 71, 72
How to Order Breakaway (Commercial) . . . . . .73
Fail-Safe Lanyard Release Plug . . . . . .74
How to Order Breakaway MIL-STD-1760 (Military) . . .75
TV Breakaway (D38999/31) for MIL-STD-1760 . . . .76
TV Breakaway Commercial Version for D38999/31, Type 6 . . . . . .77
How to Order Commercial Version D38999/31, Type 6 .78
Insert Arrangements for Breakaway Fail-Safe . . . . .79
Breakaway Fail-Safe 88-725041, 88-725014 . . . . .80
Breakaway Hybrid, Low Profile Lanyard Release Plug. .81
Stores Management Type II, Rail Launch (MIL-STD-1760) . . . . . .81

**Accessories:**
Section F . . . . . 164-183

# MIL-DTL-38999, Series III TV

## Performance

### TRI-START™ MIL-DTL-38999 SERIES III WITH METAL SHELLS - ALUMINUM, STAINLESS STEEL, CLASS K FIREWALL

Amphenol® Tri-Start MIL-DTL-38999* Series III Connectors offer the highest performance capabilities for both general duty and severe environment applications. Meeting or exceeding MIL-DTL-38999 Series III requirements, the Tri-Start connector with standard metal shells (aluminum or stainless steel with several finish options) offers these features:

- **EMI Shielding** - solid metal-to-metal coupling, grounding fingers, electroless nickel plating, and thicker wall sections provide superior EMI shielding capability of 65dB minimum at 10 GHz
- **Contact Protection** - recessed pins in this 100% scoop-proof connector minimize potential contact damage
- **Moisture Resistance** - improved interfacial seal design helps prevent electrolytic erosion of contacts
- **Corrosion Resistance** - shells of stainless steel or cadmium over nickel plating withstand a 500 hour salt spray exposure
- **Vibration/Shock** - operates under severe high temperature vibration, through 200°C
- **Firewall Capability** - available in a stainless steel shell, class RK, RS
- **Lockwiring Eliminated** - unique, self-locking, quick coupling connector eliminates lockwiring
- **Quick Coupling** - completely mates and self-locks in a 360° turn of the coupling nut
- **Inventory Support Commonality** - uses standard MIL-DTL-38999 contacts, application tools, insert arrangements
- **Electrostatic Discharge Protection (ESD)** - protection for sensitive circuitry without diodes, varistors, etc., with the use of the Faraday Cage principle which shunts high voltage, high current discharge events (see page Amphenol Filter Section)
- **Hermetic**- air leakage limited to 1 X $10^{-7}$ $cm^3$ per second optional
- **Qualified Specifications** - Stainless Steel qualified to BACC63DB and BACC63DC specifications

**PASSIVATED STAINLESS STEEL**

**ELECTROLESS NICKEL**

**OLIVE DRAB CADMIUM**

**DURMALON PLATED**

**ZINC NICKEL PLATED**

Amphenol Aerospace



## OFFER MORE VERSATILITY & OPTIONS THAN ANY OTHER INTERCONNECTION FAMILY!

HD38999

DUALOK

FILTER

PC TAILS

FAIL SAFE

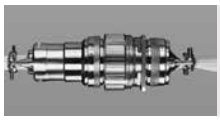
CLUTCH-LOK

FIBER OPTICS

HIGH SPEED

HERMETIC

FLEX

Composite Connector Patents:
4,268,103; 4,648,670; 4,682,832; 4,703,987.
Clutch-Lok® Patent 6,152,753.

High reliability and increased versatility best describe Amphenol MIL-DTL-38999, Series III circular connectors. Originally designed for the harshest of environments and most demanding of applications, Amphenol MIL-DTL-38999 Series III, Tri-Start connectors continue to evolve in pace with the needs of an ever-changing market.

Amphenol Tri-Start connectors can be configured with a number of application specific technologies like:

- High Density HD38999
- Dualok
- PC Tails
- Filters
- Fail Safe
- CLUTCH-LOK
- Fiber Optics
- High Speed Contacts
- Hermetics
- Flex

Flexibility aids in design optimization through the combination of different technologies within a common, time-tested, harsh environment connector body.

For more information about options, please call 800-678-0141 or visit www.amphenol-aerospace.com.

## TRI-START, SERIES III TYPICAL SHIELDING EFFECTIVENESS TEST DATA

EMI/EMP SHIELDING EFFECTIVENESS dB
TESTING BY TRIAXIAL METHOD

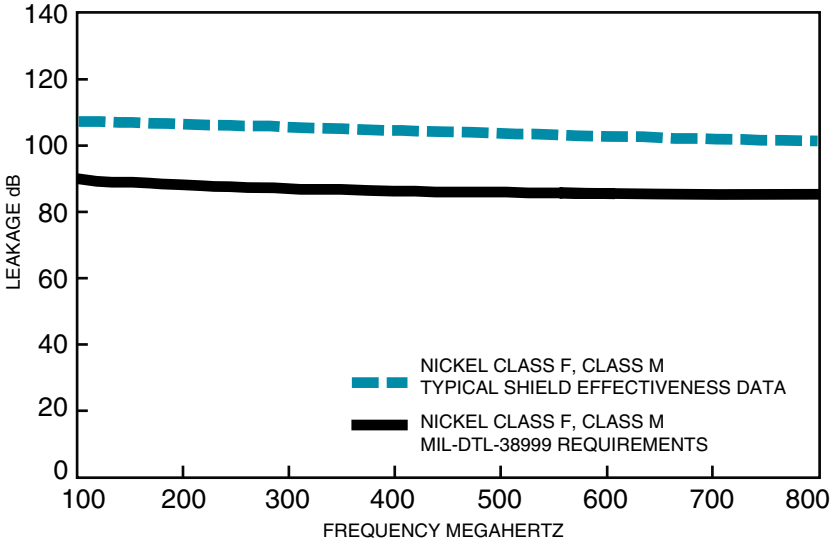


## AMPHENOL® TRI-START CONNECTORS PROVIDE EMI/EMP SHIELDING CAPABILITY WHICH EXCEEDS MIL-DTL-38999 SERIES III REQUIREMENTS.

The TV and CTV Series III connector with standard solid metal-to-metal coupling, EMI grounding fingers and conductive finishes have proven to be the ultimate in EMI/EMP shielding effectiveness. The charts illustrate shielding effectiveness data which is typical of Tri-Start connectors tested with the nickel finish (Class F-metal, Class M-composite) over a wide frequency range.

The vibration capability of the Tri-Start Series is shown in the chart below. This illustrates the most severe vibration envelope of any qualified connector available today.

These capabilities along with a +200°C, -65°C temperature rating and superior moisture sealing protection provide the user with a connector that can withstand the most rigorous application.

## TRI-START, SERIES III TYPICAL SHIELDING EFFECTIVENESS TEST DATA

EMI/EMP SHIELDING EFFECTIVENESS dB
TESTING BY MODE STIRRING METHOD

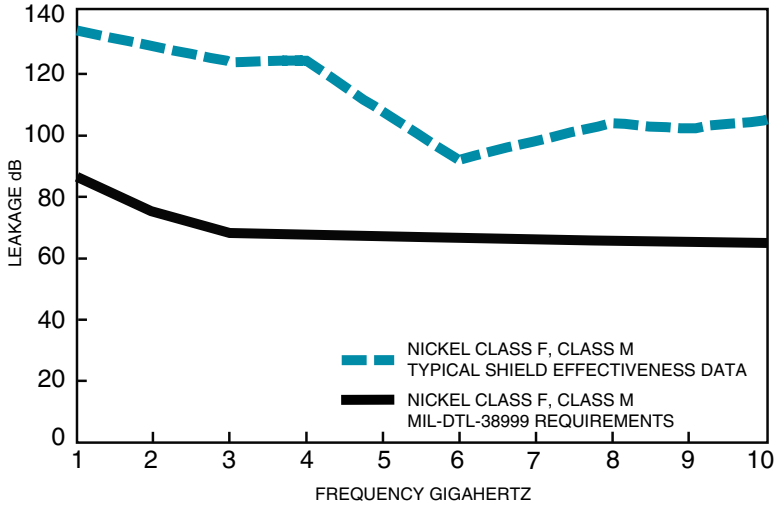


## TRI-START VIBRATION CRITERIA

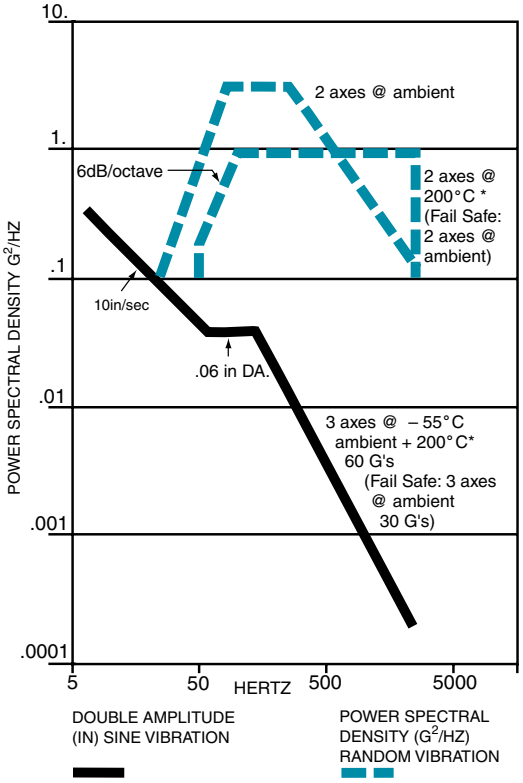


* Dependant on shell finish

Test data beyond 2GHz is subject to equipment variation.

NOTE: For test data information on the new Clutch-Lok Tri-Start, high vibration connectors, consult Amphenol Aerospace.

# MIL-DTL-38999, Series III TV

## Weight Comparisons (Composite vs. Metal)

Amphenol Aerospace

Depending on the shell style, shell size and contact count, weight savings can range from 17% to 40% compared to standard aluminum product.
**Tri-Start Weight in Ounces** (includes contacts)

| | Wall Mount Receptacle (00) + Military D38999/20 | | | | | | Jam Nut Receptacle (07) + Military D38999/24 | | | | | | Plug (06) + Military D38999/26 | | | | | |
|---|---|---|---|---|---|---|---|---|---|---|---|---|---|---|---|---|---|---|
| | Stainless Steel | | Aluminum | | Composite | | Stainless | | Aluminum | | Composite | | Stainless Steel | | Aluminum | | Composite | |
| | Pin | Socket | Pin | Socket | Pin | Socket | Pin | Socket | Pin | Socket | Pin | Socket | Pin | Socket | Pin | Socket | Pin | Socket |
| 9-35 | .7216 | .7840 | .3248 | .3777 | .2588 | .3121 | 1.1472 | 1.2096 | .4416 | .5040 | .3489 | .4413 | 1.0736 | 1.1360 | .4236 | .4625 | .2606 | .2994 |
| 9-98 | .7216 | .7776 | .2496 | .3056 | .1664 | .2224 | 1.1472 | 1.2032 | .4416 | .4976 | .3744 | .4640 | 1.0736 | 1.1296 | .3968 | .4624 | .2991 | .2337 |
| 11-35 | .9488 | 1.0800 | .3632 | .4960 | .2753 | .4081 | 1.4304 | 1.5632 | .5936 | .7264 | .4679 | .6007 | 1.2480 | 1.3808 | .5312 | .6389 | .3450 | .4582 |
| 11-98 | .9488 | 1.0620 | .3632 | .4768 | .2753 | .3889 | 1.4304 | 1.5440 | .5936 | .7072 | .4679 | .5815 | 1.2480 | 1.3616 | .5330 | .6283 | .3468 | .4457 |
| 13-8 | 1.2096 | 1.3888 | .4800 | .6592 | .3696 | .5488 | 1.9104 | 2.0896 | .7664 | .9456 | .6560 | .8352 | 1.8048 | 1.9840 | .7936 | .9728 | .5237 | .5952 |
| 13-35 | 1.2160 | 1.4320 | .4864 | .7024 | .3762 | .5922 | 1.9168 | 2.1328 | .7728 | .9888 | .6136 | .8296 | 1.8112 | 2.0272 | .8000 | .8472 | .5301 | .6531 |
| 13-98 | 1.2160 | 1.4016 | .4864 | .6720 | .3762 | .5618 | 1.9168 | 2.1024 | .7728 | .9584 | .6136 | .7992 | 1.8112 | 1.9968 | .7978 | .9856 | .5244 | .7157 |
| 15-5 | 1.5312 | 1.7904 | .6352 | .8944 | .5027 | .7619 | 2.3792 | 2.6384 | .9728 | 1.2320 | .7749 | 1.0341 | 2.2704 | 2.5456 | .9632 | 1.1719 | .6450 | .8467 |
| 15-18 | 1.5456 | 1.8416 | .7760 | .9456 | .6432 | .8128 | 2.3936 | 2.6896 | .9872 | 1.2832 | .8544 | 1.1504 | 2.2848 | 2.5808 | .9776 | 1.2736 | .6594 | .8208 |
| 15-35 | 1.5424 | 1.8768 | .6464 | .9808 | .5139 | .8483 | 2.3904 | 2.7344 | .9840 | 1.3280 | .7861 | 1.1301 | 2.2816 | 2.6256 | 1.2179 | 1.3184 | .8961 | 1.0002 |
| 17-6 | 2.1488 | 2.5904 | .9360 | 1.3776 | .7812 | 1.2228 | 2.9152 | 3.3568 | 1.2336 | 1.6752 | .9940 | 1.4356 | 2.5008 | 3.1024 | 1.1408 | 1.7424 | .8160 | 1.4176 |
| 17-26 | 2.1344 | 2.5600 | .9216 | 1.3472 | .7668 | 1.1924 | 2.9008 | 3.3264 | 1.2192 | 1.6448 | .9796 | 1.4052 | 2.4864 | 2.9120 | 1.1264 | 1.3343 | .8017 | .8062 |
| 17-35 | 2.1360 | 2.6640 | .9232 | 1.4512 | .7684 | 1.2964 | 2.9024 | 3.4304 | 1.2208 | 1.7488 | .9812 | 1.5092 | 2.4880 | 3.0160 | 1.1280 | 1.5497 | .8033 | 1.2144 |
| 19-11 | 2.2592 | 2.6656 | .9696 | 1.4528 | .7925 | 1.2757 | 3.4352 | 3.9184 | 1.4720 | 1.9552 | 1.2033 | 1.6865 | 2.9808 | 3.4640 | 1.3472 | 1.8304 | .9632 | 1.4464 |
| 19-32 | 2.1888 | 2.7264 | .9760 | 1.5136 | .7989 | 1.3365 | 3.4416 | 3.9792 | 1.4784 | 2.0160 | 1.2097 | 1.7473 | 2.9872 | 3.5248 | 1.3536 | 1.8912 | .9696 | 1.5072 |
| 19-35 | 2.1920 | 2.8432 | .9792 | 1.6304 | .8021 | 1.4533 | 3.4448 | 4.0960 | 1.4816 | 2.1328 | 1.2129 | 1.8641 | 2.9904 | 3.6416 | 1.3568 | 2.0080 | .9728 | 1.6240 |
| 21-11 | 2.7456 | 3.4640 | 1.3088 | 2.0272 | 1.1088 | 1.8272 | 3.9712 | 4.6896 | 1.8128 | 2.5312 | 1.6128 | 2.3312 | 3.4448 | 4.1632 | 1.7344 | 2.5312 | 1.3039 | 1.8710 |
| 21-16 | 2.6784 | 3.3168 | 1.2416 | 1.8800 | 1.0422 | 1.6806 | 3.9040 | 4.5424 | 1.7456 | 2.3840 | 1.4505 | 2.0889 | 3.3776 | 4.0160 | 1.6672 | 2.3168 | 1.2352 | 1.8736 |
| 21-35 | 2.6672 | 3.4992 | 1.2304 | 2.0624 | 1.0310 | 1.8630 | 3.8928 | 4.7248 | 1.7344 | 2.5664 | 1.4393 | 2.2713 | 3.3664 | 4.1984 | 1.6560 | 2.2309 | 1.2255 | 1.8003 |
| 21-41 | 2.6768 | 3.3600 | 1.2400 | 1.9232 | 1.0406 | 1.7238 | 3.9024 | 4.5856 | 1.7440 | 2.4272 | 1.4489 | 2.1321 | 3.3760 | 3.5792 | 1.6656 | 1.8688 | 1.2336 | 1.4368 |
| 23-21 | 3.0352 | 3.8624 | 1.4496 | 2.2768 | 1.2279 | 2.0551 | 4.2368 | 5.0640 | 1.9440 | 2.7712 | 1.6368 | 2.4640 | 3.7920 | 4.6192 | 1.9216 | 2.7488 | 1.4637 | 2.2896 |
| 23-35 | 3.0240 | 4.0448 | 1.4384 | 2.4592 | 1.2167 | 2.2375 | 4.2256 | 5.2464 | 1.9328 | 2.9536 | 1.6256 | 2.6464 | 3.7808 | 4.8016 | 1.9104 | 2.6087 | 1.4525 | 2.1507 |
| 23-53 | 2.8992 | 3.9072 | 1.4560 | 2.4816 | 1.2343 | 2.2599 | 4.2432 | 5.1088 | 1.9504 | 2.8160 | 1.6432 | 2.5088 | 3.7984 | 4.6640 | 1.9280 | 2.7936 | 1.4672 | 2.2384 |
| 25-4 | 3.4512 | 4.4800 | 1.7312 | 2.8816 | 1.4864 | 2.1904 | 4.8048 | 5.8272 | 2.2016 | 3.2480 | 1.9568 | 2.8720 | 4.2224 | 5.2496 | 2.2128 | 3.2560 | 1.7133 | 2.4163 |
| 25-19 | 3.5312 | 4.7264 | 1.8112 | 3.0064 | 1.5664 | 2.7616 | 4.8848 | 6.0816 | 2.2816 | 3.4784 | 2.0368 | 3.2336 | 4.3024 | 5.4992 | 2.2928 | 3.4896 | 1.7933 | 2.7058 |
| 25-20 | 3.8190 | 4.7150 | 2.0173 | 3.1125 | 1.7733 | 2.8512 | 5.1430 | 6.0380 | 2.4877 | 3.5421 | 2.1872 | 3.2416 | 4.4350 | 5.3300 | 2.2580 | 3.0182 | 1.8288 | 2.8928 |
| 25-35 | 3.4416 | 4.6656 | 1.7216 | 2.9456 | 1.4776 | 2.7016 | 4.7952 | 6.0192 | 2.1920 | 3.4160 | 1.8915 | 3.1155 | 4.2128 | 5.4368 | 2.2032 | 3.4272 | 1.7037 | 2.9277 |
| 25-61 | 3.4304 | 4.4848 | 1.7282 | 2.7648 | 1.4841 | 2.5208 | 4.7840 | 5.8384 | 2.1808 | 3.2352 | 1.8803 | 2.9347 | 4.2016 | 5.2560 | 2.1920 | 3.2464 | 1.6912 | 2.7456 |

All weight measurements are for reference only.

# High Vibration Dualok, 38999 Series III Type

## Features and Benefits

The Dualok represents the latest in high performance connector designs from Amphenol. Featuring a newly developed locking mechanism, the Dualok plug ensures rock-solid coupling and metal-to-metal bottoming in the most severe vibration environments.

*New High Vibration Dualok Connector*

### DUALOK FEATURES AND BENEFITS INCLUDE:

- Mates with standard D38999 receptacles and utilizes standard D38999 inserts.
- Designed to withstand and stay mated under vibration levels that exceed MIL-DTL-38999 levels
- Dualok stainless steel provides a weight savings of up to 42% compared to standard D38999 stainless steel designs
- Stainless steel, aluminum, composite, or aluminum bronze materials of construction
- Dualok aluminum provides ~ 10% weight reduction over D38999 Aluminum
- Coupling mechanism that does not "settle" under vibration levels exceeding MIL-DTL-38999
- Metal-to-metal bottoming for maximum EMI shielding under extreme vibration

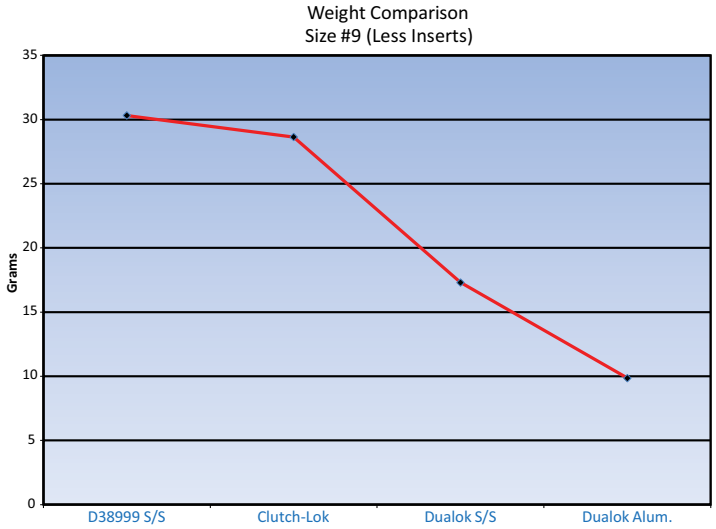


### CLUTCH-LOK™ MIL-DTL-38999, SERIES III HIGH VIBRATION CONNECTOR

The Tri-Start option CLUTCH-LOK offers all advantages of stainless steel/Class K firewall for MIL-DTL-38999 Series III connectors, plus a unique clutch design that actually tightens itself under vibration.

Features include:

- High degree of differential torque
- No settling back to the next ratchet tooth
- Completely intermateable with all existing MIL-DTL-38999
- Series III connectors
- Offers advantage in inaccessible, hard to reach areas where mating torque is difficult to apply and complete coupling is not verifiable by inspection

See page 34 for description,
44 – 46 for ordering.

### OPTIONAL SHELL GEOMETRIES

Amphenol offers a number of different shell configurations to fit your needs

- Deep Reach Shells - For increased panel thickness
- Stand-off Flange Shells - For attachments to Printed Circuit Boards.
- Connector with Integral Strain Reliefs

# High Density Interconnects

## HD38999: 9 to 187 Contacts

Amphenol Aerospace

The HD38999 family of connectors has 30% more contact density than the highest density Mil Spec 38999 connectors of its size. This series of connectors was designed to utilize mil-specified 38999 components with the exception of the contacts and inserts arrangement. Utilizing existing mil-qualified 39029 size 23 contacts and 38999 insert materials, these connectors are essentially a drop-in replacement for the standard 38999 connector.

This connector design benefits users in a couple of different ways. For those users who need to increase the amount of contacts in their application, the HD38999 series allows them to do so without increasing the size of their connector. For users who are looking to decrease the overall size of their system, they can do so by using smaller shell sizes without decreasing the number of contacts.

Amphenol has qualified this series of connectors to the requirements of MIL-DTL-38999. Amphenol also manufacturers this high density series in Filter, Hermetic and customized versions to fit our customer's needs. Please contact us if additional information is required.

## TECHNICAL DATA

HD38999 series was designed to meet and/or exceed the specifications of MIL-DTL-38999. The connector series has been tested to all the requirements of 38999 with the use of AS39029 size 23 contacts. Test reports are available upon request. The following is a summary of some of the performance requirements.

### EMI SHIELDING EFFECTIVENESS:

Solid metal to metal coupling, EMI grounding fingers and conductive finishes have proven to be the ultimate in EMI/EMP shielding effectiveness. The following chart illustrated shielding effectiveness data which is typical in HD38999 connectors.

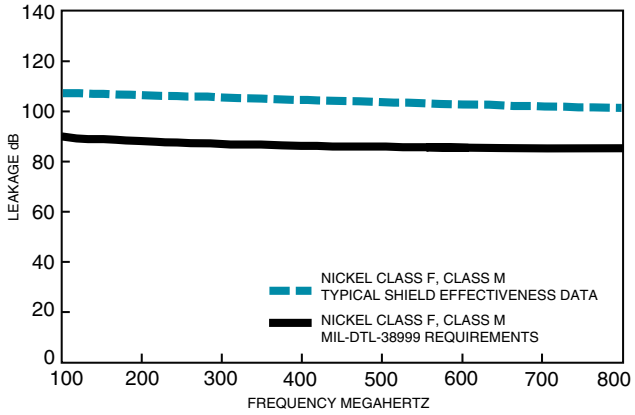


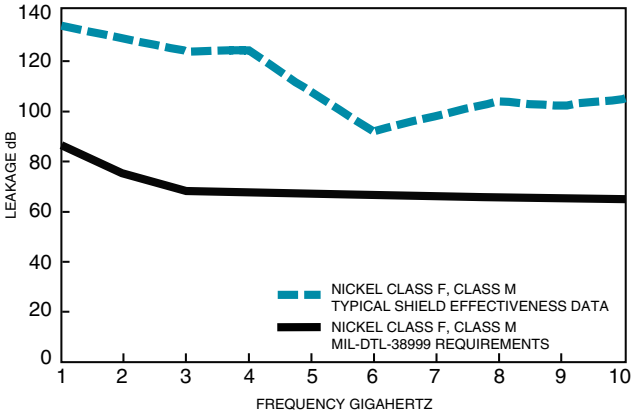


### ELECTRICAL:

22 AWG: 5.0 AMPS
24 AWG: 3.0 AMPS
26 AWG: 2.0 AMPS
28 AWG: 1.5 AMPS

Insulation Resistance: 5000 megohms min.@500 VDC 25C
Dielectric Withstanding Voltage: 1000 VRMS@sea level

### MECHANICAL:

| | | |
|---|---|---|
| Metallic Shells: | Material: | Aluminum alloy, Stainless Steel |
| | Protection: | Electroless Nickel, O.D. Cadmium, Durmalon (Nickel PTFE), Zinc Nickel |
| Composite Shells: | Material: | Thermoplastic |
| | Protection: | Electroless Nickel, O.D. Cadmium, Durmalon (Nickel PTFE), Zinc Nickel |
| Contacts: | Material: | Copper Alloy |
| | Protection: | Gold over Nickel |
| Insert Retention to Shell: | 100 psi in axial load | |
| Durability: | 500 full mating and unmating cycles | |
| Vibration: | 60G sine per MIL-DTL-38999L Para 4.5.23.2.1<br>5G2 Random per EIA-364-28E, Test condition A<br>1G2 Random per EIA-364-28E, Test condition I | |
| Shock: | Per EIA-364-27B, 300g | |

### ENVIRONMENTAL:

| | |
|---|---|
| Operating Temperature: | –65°C to +175°C |
| Salt Spray: Metallized: | Electroless Nickel: 48 hours<br>Anodic Coating, O. D. Cadmium, Durmalon, Zinc Nickel: 500 hours |
| Salt Spray Composite: | Electroless Nickel: 1000 hours<br>O. D. Cadmium, Durmalon, Zinc Nickel: 500 hours |

# Custom Designed HD38999 Connectors and Alignment Disks

**NEW CUSTOM DESIGNED HD38999 CONNECTORS - PROVIDE MORE INTERCONNECT SOLUTIONS:**

HD38999 High Density

## ALIGNMENT DISKS

Alignment disks keep contacts aligned for easier insertion into circuit boards. These are typically ordered with the connector - see step 7 of How to Order on page 47.

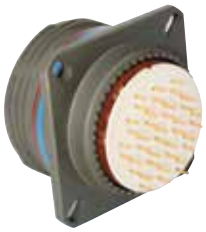

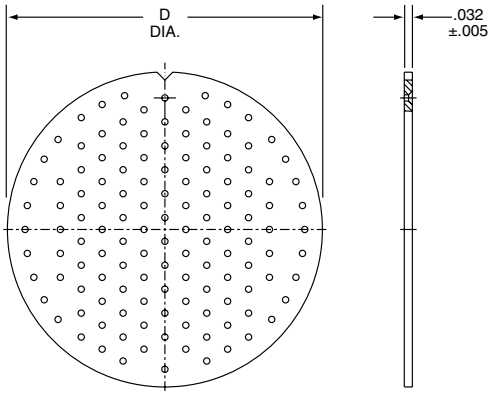


| Shell Size | D Dia. ±.010 |
|---|---|
| 9 | .234 |
| 11 | .350 |
| 13 | .500 |
| 15 | .725 |
| 17 | .750 |
| 19 | .850 |
| 21 | .953 |
| 23 | 1.147 |
| 25 | 1.250 |

## FILTERED HD38999 CONNECTORS - FOR EMI/EMP PROTECTION

High density patterns are available in filter 38999 connectors - consult Amphenol Aerospace for ordering.

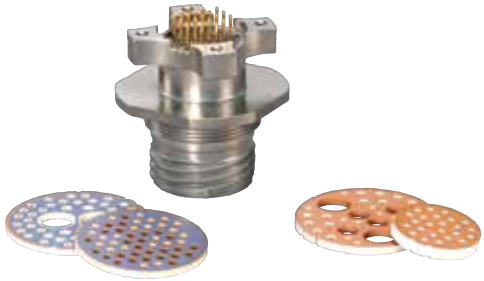

## HD38999 FOR GIGABIT ETHERNET APPLICATIONS

The HD38999 is available for high speed (Gigabit Ethernet) data transmission in the size 9-9 insert pattern.

Data transmission performance of this connector insert:

- 10 Base T, 100 Base TX, and 1000 Base T networks using Cat 5e per TIA/EIA568B and Class D per ISO/IEC 11801.
  (Test report available - consult Amphenol Aerospace for more information)

*Signal-Ground Pin Configuration Wiring Recommendations*

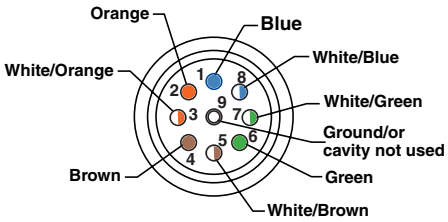


*View Rear of Connector*

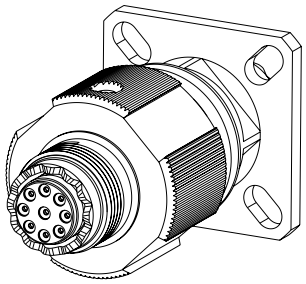

*HD38999 Connector with 9-9 Insert Pattern (Rear View)*

# MIL-DTL-38999, Series III TV, Configurator

## Online at www.amphenol-aerospace.com

Amphenol Aerospace



Now you can build a part number for Military and Commercial MIL-DTL-38999 Series III through our online configurator, located on the home page of www.amphenol-aerospace.com.

After building a part number, you have the option to download the drawing and specifications, buy if available through distribution channels, Request a Quote and the ability to download multiple part numbers to a list to manage your needs.

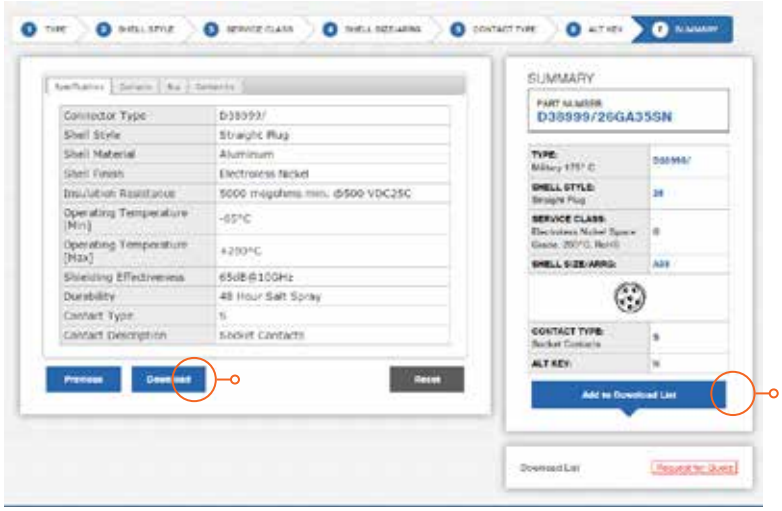


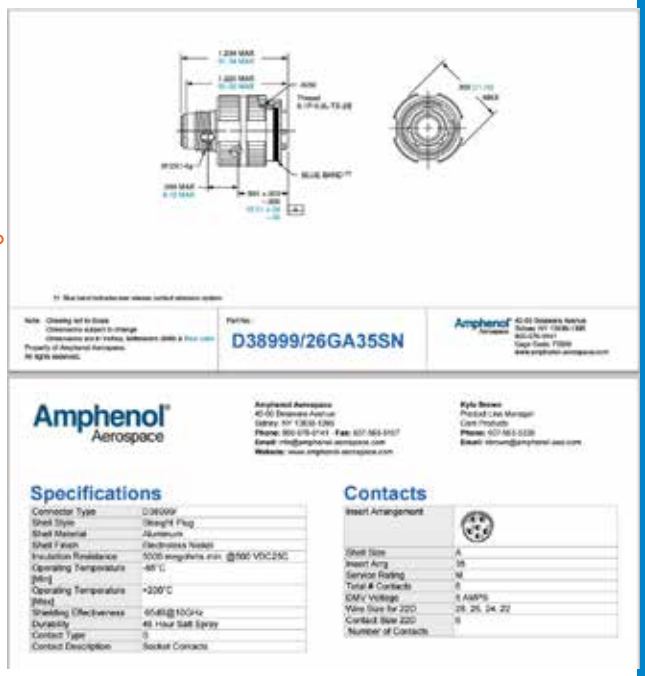


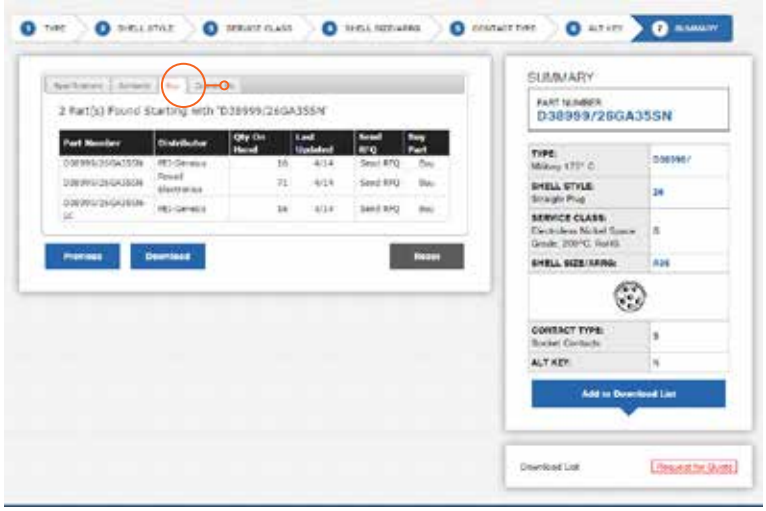

# Military to Commercial Shell Style Conversion Table

## How to Order (Military)

| MILITARY | DESCRIPTION | COMMERCIAL |
|---|---|---|
| D38999/20 | Wall Mounting Receptacle | TVP00 or TVPS00 (AL & SS); CTVP00, CTVPS00 (Composite) |
| D38999/21 | Hermetic Box Mounting Receptacle | TVPS02Y, TVPS02YN |
| D38999/23 | Hermetic Jam Nut Receptacle | TVS07Y, TVS07YN |
| D38999/24 | Jam Nut Receptacle | TV07, TVS07 (AL & SS); CTV00, CTVS00 (Composite) |
| D38999/26 | Straight Plug | TV06, TVS06 |
| D38999/25 | Solder Mount Receptacle (Hermetic) | TVSI |
| D38999/27 | Weld Mounted Receptacle (Hermetic) | TVSHI |

## HOW TO ORDER: MILITARY

| 1. Connector Type | 2. Shell Style | 3. Service Class | 4. Shell Size– Insert Arrangement | 5. Contact Type | 6. Alternate Keying Position |
|---|---|---|---|---|---|
| D38999/ | 20 | J | G35 | P | N |

### 1. CONNECTOR TYPE

| | |
|---|---|
| 38999/ | MIL-DTL-38999 III |

### 2. SHELL STYLE

| | |
|---|---|
| 20 | Wall Mount Receptacle |
| 21 | Box Mount Receptacle Hermetic |
| 26 | Straight Plug |
| 24 | Jam Nut Receptacle |
| 23 | Jam Nut Receptacle Hermetic |
| 25 | Solder Mount Receptacle Hermetic |
| 27 | Weld Mounted Receptacle, **(Hermetic)** Only |

### 3. SERVICE CLASS

| Military | Finish | RoHS | Material | Material/ Description |
|---|---|---|---|---|
| C | Anodic Coating | ■ | Aluminum | 200°C, 500 hour salt spray |
| F | Electroless Nickel | ■ | Aluminum | 200°C, EMI shielding –65dB @ 10GHz, 48 hour salt spray |
| G | Electroless Nickel | ■ | Aluminum | 200°C, Space grade, 48 hour salt spray |
| J | Olive Drab Cadmium | | Composite | 175°C, 2000 hours dynamic salt spray, EMI Shielding –50 dB@10 GHz specification min. |
| K | Passivated Stainless Steel | ■ | Stainless Steel | 200°C, firewall capability, 500 hour salt spray resistance, EMI –45 dB @ 10 GHz specification min. |
| L | Stainless Steel w/ Nickel Plate | ■ | Stainless Steel | Corrosion resistant steel, 200°C, 500 hour salt spray, , non firewall, EMI shielding –65dB @ 10GHz specification min. |
| M | Electroless Nickel | ■ | Composite | 200°C, EMI shielding –65dB @ 10GHz, 2000 hours dynamic salt spray |
| N | Stainless Steel w/ Nickel Plate | ■ | Stainless Steel | Hermetic connectors, corrosion resistant steel, 200°C |
| S | Stainless Steel w/ Nickel Plate | ■ | Stainless Steel | Non-hermetic connectors, corrosion resistant steel, 200°, firewall capability, 500 hour salt spray, EMI shielding –65dB @ 10GHz specification min. |
| T | Durmalon plated | ■ | Aluminum | Nickel-PTFE alternative to Cadmium, 175°C, 500 hour salt spray, EMI -50dB at 10GHz specification min. |
| W | Olive Drab Cadmium | | Aluminum | 175°C , 500 hour salt spray, EMI Shielding –50 dB@10 GHz specification min. |
| Y | Stainless Steel | ■ | Stainless Steel | Hermetic seal, 200°C passivated stainless steel |
| Z | Zinc-Nickel Plated | ■ | Aluminum | Zinc-Nickel Alternative to Cadmium, +175°C, 500 hour salt spray, EMI Shielding –50 dB @ 10 GHz specification min. |

## 4. SELECT A SHELL SIZE & INSERT ARRANGEMENT SEE PAGES 2-5

Shell Size & Insert Arrangements are on pages 2-5. First number represents Shell Size, second number is the Insert Arrangement.

| Triple Start Threads | | | | | | | | | |
|---|---|---|---|---|---|---|---|---|---|
| A | B | C | D | E | F | G | H | J | Mil Shell Size |
| 9 | 11 | 13 | 15 | 17 | 19 | 21 | 23 | 25 | Amphenol Shell size |

## 5. CONTACT TYPE

| | |
|---|---|
| P | 500 Cycle Pin Contacts, if require Less Contacts place (LC) at the end of part number |
| S | 500 Cycle Socket Contacts, if require Less Contacts place (LC) at the end of part number |
| H | 1500 Pin Cycle Contacts |
| J | 1500 Socket Cycle Contacts |
| A | Less Pin Contacts |
| B | Less Socket Contacts |
| X | Eyelet contacts, hermetics only |

## 6. ALTERNATE KEY POSITION

| Key/Keyway Position | | | | | |
|---|---|---|---|---|---|
| N | A | B | C | D | E |

### KEY/KEYWAY POSITION

A plug with a given rotation letter will mate with a receptacle with the same rotation letter. The angles for a given connector are the same whether it contains pins or sockets. Master key stays fixed, minor keys rotate. Inserts are not rotated in conjunction with the master key/keyway.

**RECEPTACLE**
**(front face shown)**

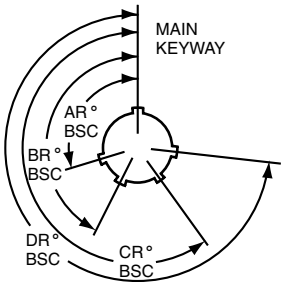


**PLUG**
**(front face shown)**

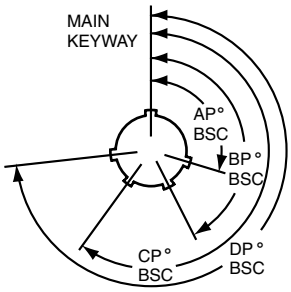


| Shell Size | Key & Keyway Arrangement Identification Letter | AR° or AP° BSC | BR° or BP° BSC | CR° or CP° BSC | DR° or DP° BSC |
|---|---|---|---|---|---|
| A (9) | N* | 105 | 140 | 215 | 265 |
| | A | 102 | 132 | 248 | 320 |
| | B | 80 | 118 | 230 | 312 |
| | C | 35 | 140 | 205 | 275 |
| | D | 64 | 155 | 234 | 304 |
| | E | 91 | 131 | 197 | 240 |
| B (11)<br>C (13)<br>D (15) | N* | 95 | 141 | 208 | 236 |
| | A | 113 | 156 | 182 | 292 |
| | B | 90 | 145 | 195 | 252 |
| | C | 53 | 156 | 220 | 255 |
| | D | 119 | 146 | 176 | 298 |
| | E | 51 | 141 | 184 | 242 |
| E (17)<br>F (19) | N* | 80 | 142 | 196 | 293 |
| | A | 135 | 170 | 200 | 310 |
| | B | 49 | 169 | 200 | 244 |
| | C | 66 | 140 | 200 | 257 |
| | D | 62 | 145 | 180 | 280 |
| | E | 79 | 153 | 197 | 272 |
| G (21)<br>H (23)<br>J (25) | N* | 80 | 142 | 196 | 293 |
| | A | 135 | 170 | 200 | 310 |
| | B | 49 | 169 | 200 | 244 |
| | C | 66 | 140 | 200 | 257 |
| | D | 62 | 145 | 180 | 280 |
| | E | 79 | 153 | 197 | 272 |

# MIL-DTL-38999, Series III TV

## How to Order (Commercial)

### 1. SELECT A TYPE & CLASS

| 1. Type & Class | 2. Shell Size-Insert Arrg. | 3. Contact Type | 4. Alternate Position | 5. PCB Length** |
|---|---|---|---|---|
| TVPS00RB- | | | | |

** If Required

| | | ALUMINUM | | | | | | |
|---|---|---|---|---|---|---|---|---|
| | | Electroless Nickel | Olive Drab Cadmium | Durmalon | Black Zinc | Electroless Nickel (With Ground Plane) | Olive Drab Cadmium (With Ground Plane) | Marine Bronze |
| RATES | Temperature | 200˚C | 175˚C | 175˚C | 175˚C | 200˚C | 175˚C | 200˚C |
| | Salt Spray | 48 Hrs | 500 Hrs | 500 Hrs | 500 Hrs | 48 Hrs | 500 Hrs | 2,000 Hrs |
| | EMI Shielding | -65dB @ 10GHz | -65dB @ 10GHz | -50dB @ 10GHz | -50dB @ 10GHz | -65dB @ 10GHz | -65dB @ 10GHz | -65dB @ 10GHz |
| | RoHS | ✓ | | ✓ | ✓ | ✓ | | |
| CONNECTOR TYPE & STYLE – Receptacle | Wall Mounting Receptacle | TVPS00RF- | TVP00RW- | TVP00DT- | TVP00DZ- | TVP00RGF- | TVP00RGW- | TVPS00RB- |
| | Box Mounting Receptacle | TVPS02RF- | TVP02RW- | TVP02DT- | TVP02DZ- | TVP02RGF- | TVP02RGW- | TVPS02RB- |
| | Line Receptacle | TVS01RF- | TV01RW- | TV01DT- | TV01DZ- | TV01RGF- | TV01RGW- | TVS01RB- |
| | Jam Nut Receptacle | TVS07RF- | TV07RW- | TV07DT- | TV07DZ- | TV07RGF- | TV07RGW- | TVS07RB- |
| CONNECTOR TYPE & STYLE – Plugs | Straight Plug | TVS06RF- | TV06RW- | TV06DT- | TV06DZ- | TV06RGF- | TV06RGW- | TVS06RB- |
| | Flange Mounted Plug | TVS09RF- | TV09RW- | TV09DT- | TV09DZ- | TV09RGF- | TV09RGW- | TVS09RB- |
| | Straight Plug w Dualok | TVS56RF- | TV56RW- | TV56DT- | TV56DZ- | TV56RGF- | TV56RGW- | TVS56RB- |
| | Straight Plug w Clutch-Lok* | - | - | - | - | - | - | - |
| CONNECTOR TYPE & STYLE – Printed Circuit Board | Wall Mounting Receptacle | TVPS00RF- | TVP00RW- | TVP00DT- | TVP00DZ- | - | - | TVPS00RB- |
| | Box Mounting Receptacle | TVPS02RF- | TVP02RW- | TVP02DT- | TVP02DZ- | - | - | TVPS02RB- |
| | Jam Nut | TVS07RF- | TV07RW- | TV07DT- | TV07DZ- | - | - | TVS07RB- |
| | Wall Mount (Double Flange) | TVPS40RF- | TVP40RW- | TVP40DT- | TVP40DZ- | - | - | TVPS40RB- |
| | Jam Nut (Double Flange) | TVS47RF- | TV47RW- | TV47DT- | TV47DZ- | - | - | TVS47RB- |
| | Wall Mount (Clinch Nuts) | TVPS10RF- | TVP10RW- | TVP10DT- | TVP10DZ- | - | - | TVPS10RB- |
| | Box Mount (Clinch Nuts) | TVPS12RF- | TVP12RW- | TVP12DT- | TVP12DZ- | - | - | TVPS12RB- |
| Hermetic | Box Mounting Receptacle | Hermetic only available in Stainless Steel | | | | | | |
| | Jam Nut Receptacle | | | | | | | |
| | Solder Mount | | | | | | | |
| | Wall Mounting Receptacle | | | | | | | |

* Stamped with Mil-Spec #D38999

Insert arrangements using multi-axial (i.e. coax, twinax, triax shielded) contacts should not be used in firewall applications.
*Coaxial arrangements are not available in firewall classes.

**Wall Mount Receptacle (00, 20)**

**Line Receptacle (01)**

**Box Mount Receptacle (02, 21)**

**Straight Plug (06)**

**Jam Nut Receptacle (07, 24)**

**Flange Mounting Plug (09)**

**Deep Reach Receptacle**
**Consult Amphenol Aerospace**

**Solder Mount Hermetic Receptacle (I, 25)**

**Lanyard Release Plug (29, 30, 31)**

## How to Order (Commercial)



| COMPOSITE | | | | STAINLESS STEEL | | | |
|---|---|---|---|---|---|---|---|
| Electroless Nickel | Olive Drab Cadmium | Electroless Nickel (With Ground Plane) | Olive Drab Cadmium (With Ground Plane) | Passivated (Firewall) | Passivated (Non-Firewall) | Nickel Plated (Firewall) | Nickel Plated (Non-Firewall) |
| 200°C | 175°C | 200°C | 175°C | 200°C | 200°C | 200°C | 200°C |
| 2,000 Hrs | 2,000 Hrs | 2,000 Hrs | 2,000 Hrs | 500 Hrs | 500 Hrs | 500 Hrs | 500 Hrs |
| -65dB @ 10GHz | -65dB @ 10GHz | -65dB @ 10GHz | -65dB @ 10GHz | -65dB @ 10GHz | -65dB @ 10GHz | -65dB @ 10GHz | -50dB @ 10GHz |
| | | | | | | | |
| CTVPS00RF- | CTVP00RW- | CTVP00RGF- | CTVP00RGW- | TVPS00RK- | TVPS00RKN- | TVPS00RS- | TVPS00RL- |
| CTVPS02RF- | CTVP02RW- | CTVP02RGF- | CTVP02RGW- | TVPS02RK- | TVPS02RKN- | TVPS02RS- | TVPS02RL- |
| CTVS01RF- | CTV01RW- | CTV01RGF- | CTV01RGW- | TVS01RK- | TVS01RKN- | TVS01RS- | TVS01RL- |
| CTVS07RF- | CTV07RW- | CTV07RGF- | CTV07RGW- | TVS07RK- | TVS07RKN- | TVS07RS- | TVS07RL- |
| CTVS06RF- | CTV06RW- | CTV06RGF- | CTV06RGW- | TVS06RK- | TVS06RKN- | TVS06RS- | TVS06RL- |
| CTVS09RF- | CTV09RW- | CTV09RGF- | CTV09RGW- | TVS09RK- | TVS09RKN- | TVS09RS- | TVS09RL- |
| CTVS56RF- | CTV56RW- | CTV56RGF- | CTV56RGW- | TVS56RK- | TVS56RKN- | TVS56RS- | TVS56RL- |
| - | - | - | - | MTVS26RK- | - | - | - |
| | | | | TVPS00RK- | TVPS00RKN- | TVPS00RS- | TVPS00RL- |
| | | | | TVPS02RK- | TVPS02RKN- | TVPS02RS- | TVPS02RL- |
| | | | | TVS07RK- | TVS07RKN- | TVS07RS- | TVS07RL- |
| | | | | TVPS40RK- | TVPS40RKN- | TVPS40RS- | TVPS40RL- |
| | | | | TVS47RK- | TVS47RKN- | TVS47RS- | TVS47RL- |
| | | | | TVPS10RK- | TVPS10RKN- | TVPS10RS- | TVPS10RL- |
| | | | | TVPS12RK- | TVPS12RKN- | TVPS12RS- | TVPS12RL- |
| Hermetic only available in Stainless Steel | | | | - | TVPS02Y- | - | TVPS02YN- |
| | | | | - | TVS07Y- | - | TVS07YN- |
| | | | | - | TVSIY- | - | TVSIYN- |
| | | | | - | TVSHIY- | - | TVSHIYN- |

| 1. Type & Class | 2. Shell Size-Insert Arrg. | 3. Contact Type | 4. Alternate Position | 5. PCB Length** |
|---|---|---|---|---|
| | 11-4 | P | | |

** If Required

### 2. SELECT A SHELL SIZE & INSERT ARRANGEMENT SEE PAGES 2-5

Shell Size & Insert Arrangements are on pages 2-5. First number represents Shell Size, second number is the Insert Arrangement.
* Size 7 and 7H are Double Start Threads only

### 3. CONTACT TYPE

| | |
|---|---|
| P | 500 Cycle Pin Contacts, if require Less Contacts place (LC) at the end of part number |
| S | 500 Cycle Socket Contacts, if require Less Contacts place (LC) at the end of part number |
| H | 1500 Cycle Pin Contacts |
| J | 1500 Cycle Socket Contacts |
| X | Eyelet contacts, hermetics only |

# MIL-DTL-38999, Series III TV

## How to Order (Alternate Keying) Commercial

| 1. Type & Class | 2. Shell Size-Insert Arrg. | 3. Contact Type | 4. Alternate Position | 5. PCB Length** |
|---|---|---|---|---|
| | | | N | |

### 4. SELECT A ALTERNATE KEYING COMMERCIAL

| Shell Size | Key & Keyway Arrangement Identification Letter | AR° or AP° BSC | BR° or BP° BSC | CR° or CP° BSC | DR° or DP° BSC |
|---|---|---|---|---|---|
| 7, 7H | N* | 120 | 240 | NA | NA |
| | A | 132 | 248 | | |
| | B | 80 | 230 | | |
| | C | 140 | 275 | | |
| | D | 155 | 234 | | |
| | E | 131 | 197 | | |
| 9 | N* | 105 | 140 | 215 | 265 |
| | A | 102 | 132 | 248 | 320 |
| | B | 80 | 118 | 230 | 312 |
| | C | 35 | 140 | 205 | 275 |
| | D | 64 | 155 | 234 | 304 |
| | E | 91 | 131 | 197 | 240 |
| 11, 13, and 15 | N* | 95 | 141 | 208 | 236 |
| | A | 113 | 156 | 182 | 292 |
| | B | 90 | 145 | 195 | 252 |
| | C | 53 | 156 | 220 | 255 |
| | D | 119 | 146 | 176 | 298 |
| | E | 51 | 141 | 184 | 242 |
| 17 and 19 | N* | 80 | 142 | 196 | 293 |
| | A | 135 | 170 | 200 | 310 |
| | B | 49 | 169 | 200 | 244 |
| | C | 66 | 140 | 200 | 257 |
| | D | 62 | 145 | 180 | 280 |
| | E | 79 | 153 | 197 | 272 |
| 21, 23, and 25 | N* | 80 | 142 | 196 | 293 |
| | A | 135 | 170 | 200 | 310 |
| | B | 49 | 169 | 200 | 244 |
| | C | 66 | 140 | 200 | 257 |
| | D | 62 | 145 | 180 | 280 |
| | E | 79 | 153 | 197 | 272 |
| 25L, 33, and 37 | N* | 80 | 142 | 188 | 293 |
| | A | 135 | 170 | 188 | 310 |
| | B | 49 | 169 | 188 | 244 |
| | C | 66 | 140 | 188 | 257 |
| | D | 62 | 145 | 188 | 280 |
| | E | 79 | 153 | 188 | 272 |

** An "N" designation is used on D38999 military part number but not on the commercial versions*

### KEY/KEYWAY POSITION

A plug with a given rotation letter will mate with a receptacle with the same rotation letter. The angles for a given connector are the same whether it contains pins or sockets. Master key stays fixed, minor keys rotate. Inserts are not rotated in conjunction with the master key/keyway.

### RECEPTACLE (FRONT FACE SHOWN)

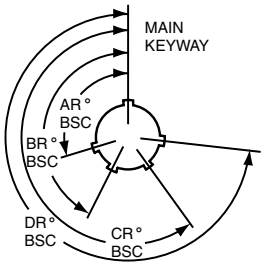


### PLUG (FRONT FACE SHOWN)

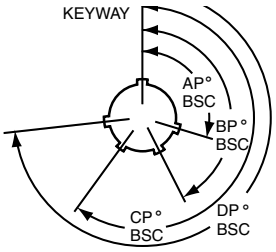


### Alignment Disc

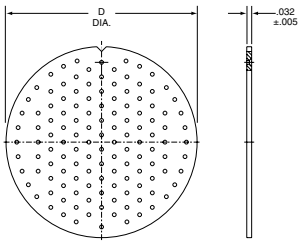


| Shell Size | D Dia. ±.010 |
|---|---|
| 9 | .234 |
| 11 | .350 |
| 13 | .500 |
| 15 | .725 |
| 17 | .750 |
| 19 | .850 |
| 21 | .953 |
| 23 | 1.147 |
| 25 | 1.250 |

### 5. PCB LENGTH FOR COMMERCIAL ONLY

** If Required

| Contact Stickout | Pin Contacts | Pin Contacts with Alignment Disk |
|---|---|---|
| .150" | (P15) | (P15AD) |
| .250" | (P25) | (P25AD) |
| .350" | (P35) | (P35AD) |

| Contact Stickout | Socket Contacts | Socket Contacts with Alignment Disk |
|---|---|---|
| .150" | (S15) | (S15AD) |
| .250" | (S25) | (S25AD) |
| .350" | (S35) | (S35AD) |

### 5. PCB LENGTH FOR HD38999 ONLY

**9-9, 11-19, 13-32, 15-55, 17-73, 19-88, 21-121, 23-151, 25-187**

| PCB tail stickout +/-.040 inch | Without Alignment Disk | | With Alignment Disc | |
|---|---|---|---|---|
| | Pins | Sockets | Pins | Sockets |
| .100" nominal | (P1*) | (S1) | (P1AD) | (S1AD) |
| .150" nominal | (P15*) | (S15) | (P15AD) | (S15AD) |
| .200" nominal | (P2) | (S2) | (P2AD) | (S2AD) |
| .250" nominal | (P25*) | (S25) | (P25AD) | (S25AD) |
| .300" nominal | (P3*) | (S3) | (P3AD) | (S3AD) |
| .350" nominal | (P35) | (S35) | (P35AD) | (S35AD) |

* Not available in TV40 wall mount double flange receptacle or TV47 jam nut double flange receptacle styles.
Note: Standard tail diameter is 0.019±.001 Stick out is measured from the end of the connector shell to end of the contact

Amphenol Aerospace



## HOW TO ORDER - BOEING BACC63 CT & CU

| 1. Boeing Basic Number | 2. Style | 3. Shell Size | 4. Shell Finish & Contact | 5. Insert Arrangement | 6. Contact Type | 7. Alternate Keying Position | 8. Ordering Option |
|---|---|---|---|---|---|---|---|
| BACC63 | CT | 15 | – | 19 | P | N | H |

## COMPOSITE

### 1. BOEING NUMBER

| | |
|---|---|
| BACC63 | Boeing |

### 2. STYLE

| | |
|---|---|
| CT | Composite Plug |
| CU | Composite Receptacle |

### 3. SHELL SIZE

| | |
|---|---|
| 15 | One Shell Size |

### 4. SHELL FINISH & CONTACT

| | |
|---|---|
| C | CT Style Only. Cadmium Plated, Grounded |
| D | Cadmium Plated, ungrounded |
| G | Nickel Plated, Grounded |
| – | Nickel Plated, Ungrounded |

### 5. INSERT ARRANGEMENTS-

Consult Amphenol Aerospace for insert arrangements available.

### 6. CONTACT TYPE

| | |
|---|---|
| P | Pin |
| S | Socket |

### 7. ALTERNATE KEYING POSITION

| | |
|---|---|
| N | Normal |
| A-E | Alternates |

### 8. ORDERING OPTIONS

| | |
|---|---|
| H | Without Contacts & Seal Plugs |
| Blank | With Contacts & Seal Plugs |

## HOW TO ORDER - BOEING BACC63 DB & DC

| 1. Boeing Basic Number | 2. Style | 3. Shell Size-Insert Arrangement | 4. Contact Type | 5. Alternate Keying Position | 6. Ordering Option |
|---|---|---|---|---|---|
| BACC63 | DB | 15-19 | P | N | H |
| BACC63 | DC | 17-8 | P | N | H |

## STAINLESS STEEL

### 1. BOEING NUMBER

| | |
|---|---|
| BACC63 | Boeing |

### 2. SELECT A STYLE

| | |
|---|---|
| DB | Stainless Steel Plug |
| DC | Stainless Steel Receptacle |

### 3. SELECT A SHELL SIZE & INSERT ARRANGEMENT SEE PAGES 2-5

Shell Size & Insert Arrangements are on pages 2-5. First number represents Shell Size, second number is the Insert Arrangement. Please include the dash.

### 4. CONTACT TYPE

| | |
|---|---|
| P | Pin |
| S | Socket |

### 5. ALTERNATE KEYING POSITION

| | |
|---|---|
| N | Normal |
| A-E | Alternates |

### 6. ORDERING OPTION

| | |
|---|---|
| H | Without Contacts & Seal Plugs |
| Blank | With Contacts & Seal Plugs |

# Wall Mounting Receptacle

## Military (D38999/20), Commercial (TVP00, TVPS00, CTVP00, CTVPS00)

**PART NUMBER BUILDER Page 42-46**
**ONLINE CONFIGURATOR www.amphenol-aerospace.com**

**MILITARY**
D38999/20

Commercial

**ALUMINUM**
TVPS00RF
TVP00RW
TVP00DT
TVP00DZ
TVP00RGF
TVP00RGW
TVPS00RB

**COMPOSITE**
CTVPS00RF
CTVP00RW
CTVP00RGF
CTVP00RGW

**STAINLESS STEEL**
TVPS00RK
TVPS00RKN
TVPS00RS
TVPS00RL

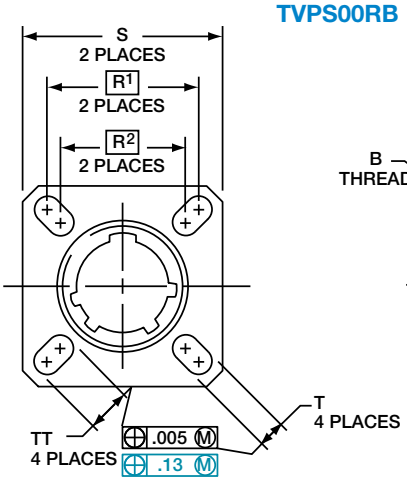


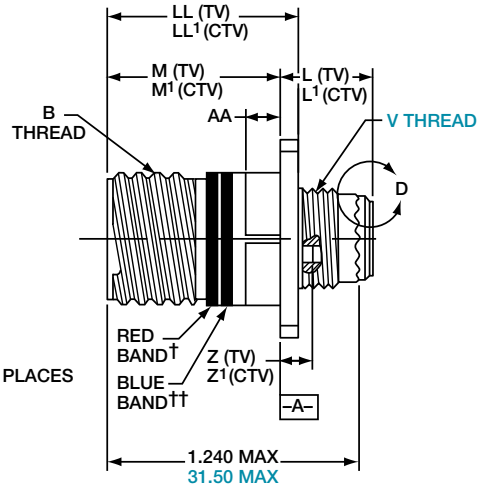


VIEW D
FOR SIZE 8 COAXIAL ONLY,
RELATIVE TO –A–

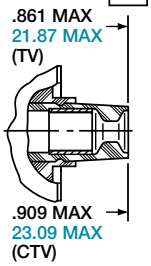


VIEW D
FOR SIZE 8 TWINAX ONLY,
RELATIVE TO –A–

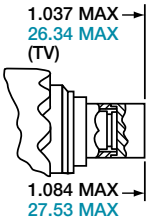


**PANEL HOLE DIMENSIONS**

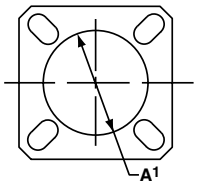


BACK PANEL MOUNTING

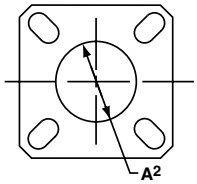


FRONT PANEL MOUNTING

† Red band indicates fully mated
†† Blue band indicates rear release contact retention system

Inches

| Shell Size | MS Shell Size Code | B Thread Class 2A 0.1P=0.3L-TS (Plated) | L Max. (TV) | L1 Max. (CTV) | M +.000 –.005 (TV) | M1 +.000 –.005 (CTV) | R1 | R2 | S Max. | T ±.008 | Z. Max. (TV) | Z1 Max. (CTV) | A1 Back Panel Mount | A2 Front Panel Mount | AA Max. Panel Thickness | LL +.006 –.000 (TV) | LL1 ±.005 (CTV) | TT ±.008 |
|---|---|---|---|---|---|---|---|---|---|---|---|---|---|---|---|---|---|---|
| 9 | A | .6250 | .469 | .514 | .820 | .773 | .719 | .594 | .948 | .128 | .153 | .198 | .655 | .516 | .234 | .905 | .908 | .216 |
| 11 | B | .7500 | .469 | .514 | .820 | .773 | .812 | .719 | 1.043 | .128 | .153 | .198 | .796 | .625 | .234 | .905 | .908 | .194 |
| 13 | C | .8750 | .469 | .514 | .820 | .773 | .906 | .812 | 1.137 | .128 | .153 | .198 | .922 | .750 | .234 | .905 | .908 | .194 |
| 15 | D | 1.0000 | .469 | .514 | .820 | .773 | .969 | .906 | 1.232 | .128 | .153 | .198 | 1.047 | .906 | .234 | .905 | .908 | .173 |
| 17 | E | 1.1875 | .469 | .514 | .820 | .773 | 1.062 | .969 | 1.323 | .128 | .153 | .198 | 1.219 | 1.016 | .234 | .905 | .908 | .194 |
| 19 | F | 1.2500 | .469 | .514 | .820 | .773 | 1.156 | 1.062 | 1.449 | .128 | .153 | .198 | 1.297 | 1.141 | .234 | .905 | .908 | .194 |
| 21 | G | 1.3750 | .500 | .545 | .790 | .741 | 1.250 | 1.156 | 1.575 | .128 | .183 | .228 | 1.442 | 1.266 | .204 | .905 | .904 | .194 |
| 23 | H | 1.5000 | .500 | .545 | .790 | .741 | 1.375 | 1.250 | 1.701 | .154 | .183 | .228 | 1.547 | 1.375 | .204 | .905 | .904 | .242 |
| 25 | J | 1.6250 | .500 | .545 | .790 | .741 | 1.500 | 1.375 | 1.823 | .154 | .183 | .228 | 1.672 | 1.484 | .204 | .905 | .904 | .242 |

Millimeters

| Shell Size | MS Shell Size Code | L Max. (TV) | L1 Max. (CTV) | M +.00 –.13 (TV) | M1 +.00 –.13 (CTV) | R1 | R2 | S Max. | T ±.20 | V Thread Metric | Z. Max. (TV) | Z1 Max. (CTV) | A1 Back Panel Mount | A2 Front Panel Mount | AA Max. | LL +.15 –.00 (TV) | LL1 ±.13 (CTV) | TT ±.20 |
|---|---|---|---|---|---|---|---|---|---|---|---|---|---|---|---|---|---|---|
| 9 | A | 11.91 | 13.06 | 20.83 | 19.63 | 18.26 | 15.09 | 24.1 | 3.25 | M12X1-6g | 3.89 | 5.03 | 16.66 | 13.11 | 5.94 | 22.99 | 23.06 | 5.49 |
| 11 | B | 11.91 | 13.06 | 20.83 | 19.63 | 20.62 | 18.26 | 26.5 | 3.25 | M15X1-6g | 3.89 | 5.03 | 20.22 | 15.88 | 5.94 | 22.99 | 23.06 | 4.93 |
| 13 | C | 11.91 | 13.06 | 20.83 | 19.63 | 23.01 | 20.62 | 28.9 | 3.25 | M18X1-6g | 3.89 | 5.03 | 23.42 | 19.05 | 5.94 | 22.99 | 23.06 | 4.93 |
| 15 | D | 11.91 | 13.06 | 20.83 | 19.63 | 24.61 | 23.01 | 31.3 | 3.25 | M22X1-6g | 3.89 | 5.03 | 26.59 | 23.01 | 5.94 | 22.99 | 23.06 | 4.39 |
| 17 | E | 11.91 | 13.06 | 20.83 | 19.63 | 26.97 | 24.61 | 33.7 | 3.25 | M25X1-6g | 3.89 | 5.03 | 30.96 | 25.81 | 5.94 | 22.99 | 23.06 | 4.93 |
| 19 | F | 11.91 | 13.06 | 20.83 | 19.63 | 29.36 | 26.97 | 36.9 | 3.25 | M28X1-6g | 3.89 | 5.03 | 32.94 | 28.98 | 5.94 | 22.99 | 23.06 | 4.93 |
| 21 | G | 12.70 | 13.84 | 20.07 | 18.82 | 31.75 | 29.36 | 40.1 | 3.25 | M31X1-6g | 4.65 | 5.79 | 36.12 | 32.16 | 5.18 | 22.99 | 22.96 | 4.93 |
| 23 | H | 12.70 | 13.84 | 20.07 | 18.82 | 34.93 | 31.75 | 43.3 | 3.91 | M34X1-6g | 4.65 | 5.79 | 39.29 | 34.93 | 5.18 | 22.99 | 22.96 | 6.15 |
| 25 | J | 12.70 | 13.84 | 20.07 | 18.82 | 38.10 | 34.93 | 46.4 | 3.91 | M37X1-6g | 4.65 | 5.79 | 42.47 | 37.69 | 5.18 | 22.99 | 22.96 | 6.15 |

All dimensions for reference only

☐ Designates true position dimensioning

# Box Mounting Receptacle

## Commercial (TVP02, TVPS02, CTVP02, CTVPS02)

Amphenol Aerospace

**PART NUMBER BUILDER Page 44-46**
**ONLINE CONFIGURATOR www.amphenol-aerospace.com**

Commercial

| ALUMINUM | COMPOSITE | STAINLESS STEEL |
|---|---|---|
| TVPS02RF | CTVPS02RF | TVPS02RK |
| TVP02RW | CTVP02RW | TVPS02RKN |
| TVP02DT | CTVP02RGF | TVPS02RS |
| TVP02DZ | CTVP02RGW | TVPS02RL |
| TVP02RGF | | |
| TVP02RGW | | |
| TVPS02RB | | |

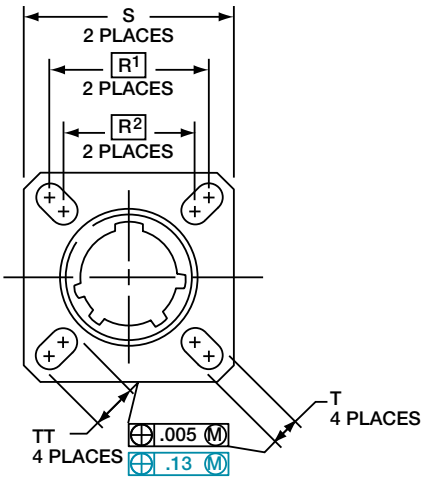


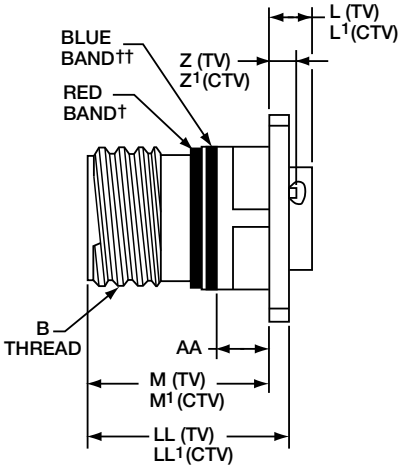


**PANEL HOLE DIMENSIONS**

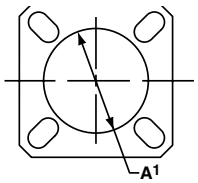


BACK PANEL MOUNTING

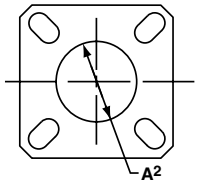


FRONT PANEL MOUNTING

† Red band indicates fully mated
†† Blue band indicates rear release contact retention system

Consult Amphenol Aerospace for availability of composite box mount receptacles.

Inches

| Shell Size | MS Shell Size Code | B Thread Class 2A 0.1P=0.3L-TS (Plated) | L Max. (TV) | L1 Max. (CTV) | M +.000 –.005 (TV) | M1 +.000 –.005 (CTV) | R1 | R2 | S Max. | T ±.008 | Z. Max. (TV) | Z1 Max. (CTV) | A1 Back Panel Mount | A2 Front Panel Mount | AA Max. Panel Thickness | LL +.006 –.000 (TV) | LL1 ±.005 (CTV) | TT ±.008 |
|---|---|---|---|---|---|---|---|---|---|---|---|---|---|---|---|---|---|---|
| 9 | A | .6250 | .205 | .250 | .820 | .773 | .719 | .594 | .948 | .128 | .153 | .198 | .650 | .510 | .234 | .905 | .908 | .216 |
| 11 | B | .7500 | .205 | .250 | .820 | .773 | .812 | .719 | 1.043 | .128 | .153 | .198 | .800 | .620 | .234 | .905 | .908 | .194 |
| 13 | C | .8750 | .205 | .250 | .820 | .773 | .906 | .812 | 1.137 | .128 | .153 | .198 | .910 | .740 | .234 | .905 | .908 | .194 |
| 15 | D | 1.0000 | .205 | .250 | .820 | .773 | .969 | .906 | 1.232 | .128 | .153 | .198 | 1.040 | .900 | .234 | .905 | .908 | .173 |
| 17 | E | 1.1875 | .205 | .250 | .820 | .773 | 1.062 | .969 | 1.323 | .128 | .153 | .198 | 1.210 | 1.010 | .234 | .905 | .908 | .194 |
| 19 | F | 1.2500 | .205 | .250 | .820 | .773 | 1.156 | 1.062 | 1.449 | .128 | .153 | .198 | 1.280 | 1.130 | .234 | .905 | .908 | .194 |
| 21 | G | 1.3750 | .235 | .280 | .790 | .741 | 1.250 | 1.156 | 1.575 | .128 | .183 | .228 | 1.410 | 1.250 | .204 | .905 | .904 | .194 |
| 23 | H | 1.5000 | .235 | .280 | .790 | .741 | 1.375 | 1.250 | 1.701 | .154 | .183 | .228 | 1.530 | 1.360 | .204 | .905 | .904 | .242 |
| 25 | J | 1.6250 | .235 | .280 | .790 | .741 | 1.500 | 1.375 | 1.823 | .154 | .183 | .228 | 1.660 | 1.470 | .204 | .905 | .904 | .242 |

Millimeters

| Shell Size | MS Shell Size Code | L Max. (TV) | L1 Max. (CTV) | M +.00 –.13 (TV) | M1 +.00 –.13 (CTV) | R1 | R2 | S Max. | T ±.20 | Z. Max. (TV) | Z1 Max. (CTV) | A1 Back Panel Mount | A2 Front Panel Mount | AA Max. | LL +.15 –.00 (TV) | LL1 ±.13 (CTV) | TT ±.20 |
|---|---|---|---|---|---|---|---|---|---|---|---|---|---|---|---|---|---|
| 9 | A | 5.21 | 6.35 | 20.83 | 19.63 | 18.26 | 15.09 | 24.1 | 3.25 | 3.89 | 5.03 | 16.66 | 13.11 | 5.94 | 22.99 | 23.06 | 5.49 |
| 11 | B | 5.21 | 6.35 | 20.83 | 19.63 | 20.62 | 18.26 | 26.5 | 3.25 | 3.89 | 5.03 | 20.22 | 15.88 | 5.94 | 22.99 | 23.06 | 4.93 |
| 13 | C | 5.21 | 6.35 | 20.83 | 19.63 | 23.01 | 20.62 | 28.9 | 3.25 | 3.89 | 5.03 | 23.42 | 19.05 | 5.94 | 22.99 | 23.06 | 4.93 |
| 15 | D | 5.21 | 6.35 | 20.83 | 19.63 | 24.61 | 23.01 | 31.3 | 3.25 | 3.89 | 5.03 | 26.59 | 23.01 | 5.94 | 22.99 | 23.06 | 4.39 |
| 17 | E | 5.21 | 6.35 | 20.83 | 19.63 | 26.97 | 24.61 | 33.7 | 3.25 | 3.89 | 5.03 | 30.96 | 25.81 | 5.94 | 22.99 | 23.06 | 4.93 |
| 19 | F | 5.21 | 6.35 | 20.83 | 19.63 | 29.36 | 26.97 | 36.9 | 3.25 | 3.89 | 5.03 | 32.94 | 28.98 | 5.94 | 22.99 | 23.06 | 4.93 |
| 21 | G | 5.97 | 7.11 | 20.07 | 18.82 | 31.75 | 29.36 | 40.1 | 3.25 | 4.65 | 5.79 | 36.12 | 32.16 | 5.18 | 22.99 | 22.96 | 4.93 |
| 23 | H | 5.97 | 7.11 | 20.07 | 18.82 | 34.92 | 31.75 | 43.3 | 3.91 | 4.65 | 5.79 | 39.29 | 34.93 | 5.18 | 22.99 | 22.96 | 6.15 |
| 25 | J | 5.97 | 7.11 | 20.07 | 18.82 | 38.10 | 34.92 | 46.4 | 3.91 | 4.65 | 5.79 | 42.47 | 37.69 | 5.18 | 22.99 | 22.96 | 6.15 |

All dimensions for reference only

☐ Designates true position dimensioning

# Line Receptacle

## Commercial (TV01, TVS01, CTV01, CTVS01)

**PART NUMBER BUILDER Page 44-46**
**ONLINE CONFIGURATOR www.amphenol-aerospace.com**

Commercial

| ALUMINUM | COMPOSITE | STAINLESS STEEL |
|---|---|---|
| TVS01RF | CTVS01RF | TVS01RK |
| TV01RW | CTV01RW | TVS01RKN |
| TV01DT | CTV01RGF | TVS01RS |
| TV01DZ | CTV01RGW | TVS01RL |
| TV01RGF | | |
| TV01RGW | | |
| TVS01RB | | |

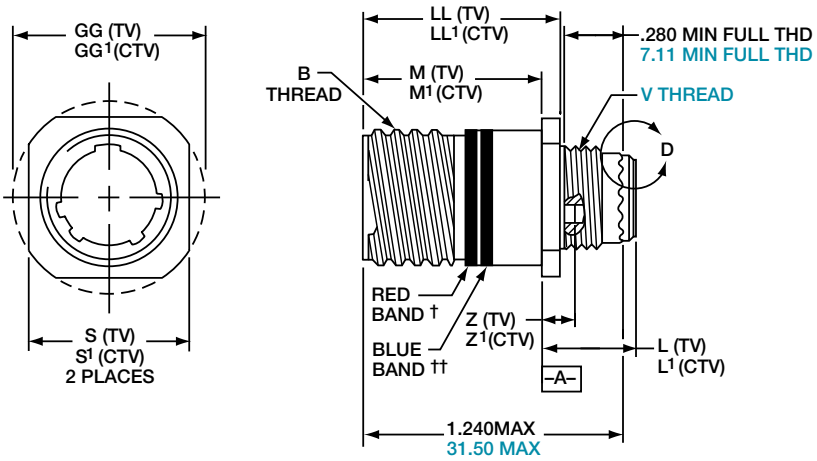


† Red band indicates fully mated
†† Blue band indicates rear release contact retention system

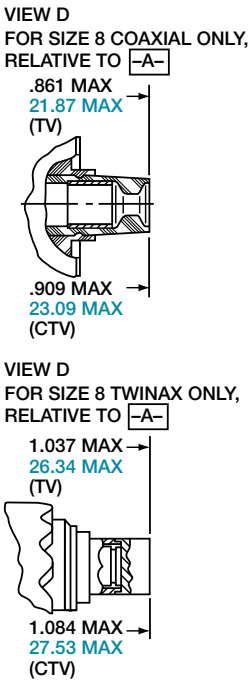


Inches

| Shell Size | MS Shell Size Code | B Thread 0.1P-0.3L-TS-2A (Plated) | M +.000 –.005 (TV) | M1 +.000 –.005 (CTV) | L Max. (TV) | L1 Max. (CTV) | S ±.010 (TV) | S1 ±.010 (CTV) | Z Max (TV) | Z1 Max (CTV) | GG ±.010 (TV) | GG1 ±.010 (CTV) | LL +.006 –.000 (TV) | LL1 ±.005 (CTV) |
|---|---|---|---|---|---|---|---|---|---|---|---|---|---|---|
| 9 | A | .6250 | .820 | .773 | .469 | .514 | .675 | .635 | .153 | .198 | .812 | .699 | .905 | .908 |
| 11 | B | .7500 | .820 | .773 | .469 | .514 | .800 | .765 | .153 | .198 | .905 | .875 | .905 | .908 |
| 13 | C | .8750 | .820 | .773 | .469 | .514 | .925 | .885 | .153 | .198 | 1.093 | 1.007 | .905 | .908 |
| 15 | D | 1.0000 | .820 | .773 | .469 | .514 | 1.050 | 1.100 | .153 | .198 | 1.219 | 1.140 | .905 | .908 |
| 17 | E | 1.1875 | .820 | .773 | .469 | .514 | 1.238 | 1.197 | .153 | .198 | 1.375 | 1.229 | .905 | .908 |
| 19 | F | 1.2500 | .820 | .773 | .469 | .514 | 1.300 | 1.260 | .153 | .198 | 1.469 | 1.380 | .905 | .908 |
| 21 | G | 1.3750 | .790 | .741 | .500 | .545 | 1.425 | 1.385 | .183 | .228 | 1.625 | 1.493 | .905 | .904 |
| 23 | H | 1.5000 | .790 | .741 | .500 | .545 | 1.550 | 1.510 | .183 | .228 | 1.750 | 1.626 | .905 | .904 |
| 25 | J | 1.6250 | .790 | .741 | .500 | .545 | 1.675 | 1.635 | .183 | .228 | 1.875 | 1.777 | .905 | .904 |

Millimeters

| Shell Size | MS Shell Size Code | M +.00–.013 (TV) | M1 +.00 –.13 (CTV) | L Max. (TV) | L1 Max. (CTV) | S ±.25 (TV) | S1 ±.010 (CTV) | V Thread Metric | Z Max (TV) | Z1 Max (CTV) | GG ±.25 (TV) | GG1 ±.25 (CTV) | LL +.15 –.00 (TV) | LL1 ±.13 (CTV) |
|---|---|---|---|---|---|---|---|---|---|---|---|---|---|---|
| 9 | A | 20.83 | 19.63 | 11.91 | 13.06 | 17.15 | 16.13 | M12X1-6g | 3.89 | 5.03 | 20.62 | 17.75 | 22.99 | 23.06 |
| 11 | B | 20.83 | 19.63 | 11.91 | 13.06 | 20.32 | 19.43 | M15X1-6g | 3.89 | 5.03 | 22.99 | 22.22 | 22.99 | 23.06 |
| 13 | C | 20.83 | 19.63 | 11.91 | 13.06 | 23.50 | 22.47 | M18X1-6g | 3.89 | 5.03 | 27.76 | 25.57 | 22.99 | 23.06 |
| 15 | D | 20.83 | 19.63 | 11.91 | 13.06 | 26.67 | 27.94 | M22X1-6g | 3.89 | 5.03 | 30.96 | 28.95 | 22.99 | 23.06 |
| 17 | E | 20.83 | 19.63 | 11.91 | 13.06 | 31.45 | 30.40 | M25X1-6g | 3.89 | 5.03 | 34.93 | 31.21 | 22.99 | 23.06 |
| 19 | F | 20.83 | 19.63 | 11.91 | 13.06 | 33.02 | 32.00 | M28X1-6g | 3.89 | 5.03 | 37.31 | 35.05 | 22.99 | 23.06 |
| 21 | G | 20.07 | 18.82 | 12.70 | 13.84 | 36.20 | 35.18 | M31X1-6g | 4.65 | 5.79 | 41.28 | 37.92 | 22.99 | 22.96 |
| 23 | H | 20.07 | 18.82 | 12.70 | 13.84 | 39.37 | 38.35 | M34X1-6g | 4.65 | 5.79 | 44.45 | 41.30 | 22.99 | 22.96 |
| 25 | J | 20.07 | 18.82 | 12.70 | 13.84 | 42.55 | 41.53 | M37X1-6g | 4.65 | 5.79 | 47.63 | 45.13 | 22.99 | 22.96 |

All dimensions for reference only

# Jam Nut Receptacle

## Military (D38999/24), Commercial (TV07, TVS07, CTV07, CTVP07)

**PART NUMBER BUILDER Page 42-46**
**ONLINE CONFIGURATOR www.amphenol-aerospace.com**

**MILITARY**
D38999/24

**Commercial**

| ALUMINUM | COMPOSITE | STAINLESS STEEL |
|---|---|---|
| TVS07RF | CTVPS07RF | TVS07RK |
| TV07RW | CTV07RW | TVS07RKN |
| TV07DT | CTV07RGF | TVS07RS |
| TV07DZ | CTV07RGW | TVS07RL |
| TV07RGF | | |
| TV07RGW | | |
| TVS07RB | | |

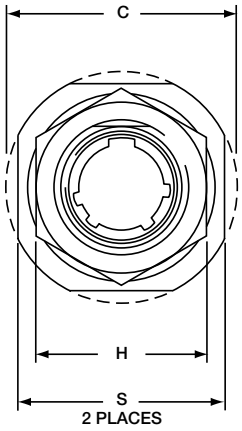


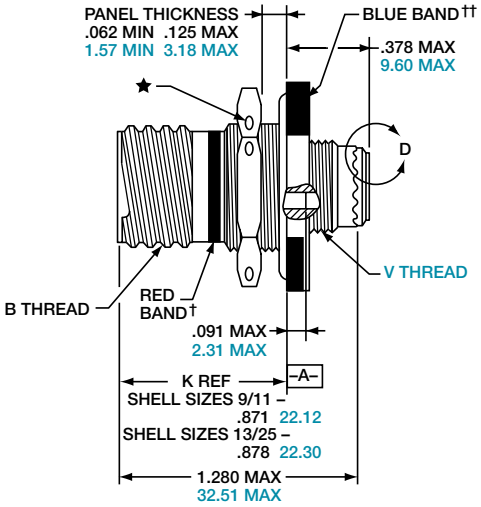


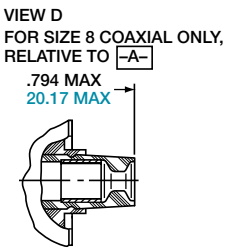


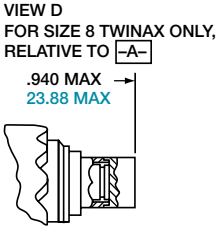


**PANEL HOLE DIMENSIONS**

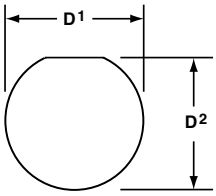


**JAM NUT D-HOLE MOUNTING**

† Red band indicates fully mated
†† Blue band indicates rear release contact retention system
★ .059 dia min.
1.5 dia min., 3 lockwire holes Formed lockwire hole design (6 holes) is optional

Inches

| Shell Size | MS Shell Size Code | B Thread Class 2A 0.1P-0.3L-TS (Plated) | C Max. | D1 +.010 –.000 | D2 +.000 –.010 | H Hex +.017 –.016 | S ±.010 |
|---|---|---|---|---|---|---|---|
| 9 | A | .6250 | 1.199 | .693 | .657 | .875 | 1.062 |
| 11 | B | .7500 | 1.386 | .825 | .770 | 1.000 | 1.250 |
| 13 | C | .8750 | 1.511 | 1.010 | .955 | 1.188 | 1.375 |
| 15 | D | 1.0000 | 1.636 | 1.135 | 1.085 | 1.312 | 1.500 |
| 17 | E | 1.1875 | 1.761 | 1.260 | 1.210 | 1.438 | 1.625 |
| 19 | F | 1.2500 | 1.949 | 1.385 | 1.335 | 1.562 | 1.812 |
| 21 | G | 1.3750 | 2.073 | 1.510 | 1.460 | 1.688 | 1.938 |
| 23 | H | 1.5000 | 2.199 | 1.635 | 1.585 | 1.812 | 2.062 |
| 25 | J | 1.6250 | 2.323 | 1.760 | 1.710 | 2.000 | 2.188 |

Millimeters

| Shell Size | MS Shell Size Code | C Max. | D1 +.25 –.00 | D2 +.00 –.25 | H Hex +.43 –.41 | S ±.25 | V Thread Metric |
|---|---|---|---|---|---|---|---|
| 9 | A | 30.45 | 17.60 | 16.70 | 22.23 | 26.97 | M12X1-6g |
| 11 | B | 35.20 | 20.96 | 19.59 | 25.40 | 31.75 | M15X1-6g |
| 13 | C | 38.38 | 25.65 | 24.26 | 30.18 | 34.93 | M18X1-6g |
| 15 | D | 41.55 | 28.83 | 27.56 | 33.32 | 38.10 | M22X1-6g |
| 17 | E | 44.73 | 32.01 | 30.73 | 36.53 | 41.28 | M25X1-6g |
| 19 | F | 49.50 | 35.18 | 33.91 | 39.67 | 46.02 | M28X1-6g |
| 21 | G | 52.65 | 38.35 | 37.08 | 42.80 | 49.23 | M31X1-6g |
| 23 | H | 55.85 | 41.53 | 40.26 | 46.02 | 52.37 | M34X1-6g |
| 25 | J | 59.00 | 44.70 | 43.43 | 50.80 | 55.58 | M37X1-6g |

All dimensions for reference only NOTE: Deep reach receptacles are available for panel thicknesses up to .750 max.

# Straight Plug

## Military (D38999/26), Commercial (TV06, TVS06, CTV06, CTVS06)

**PART NUMBER BUILDER Page 42-46**
**ONLINE CONFIGURATOR www.amphenol-aerospace.com**

**MILITARY**
D38999/26

Commercial

| ALUMINUM | COMPOSITE | STAINLESS STEEL |
|---|---|---|
| TVS06RF | CTVS06RF | TVS06RK |
| TV06RW | CTV06RW | TVS06RKN |
| TV06DT | CTV06RGF | TVS06RS |
| TV06DZ | CTV06RGW | TVS06RL |
| TV06RGF | | |
| TV06RGW | | |
| TVS06RB | | |

METAL

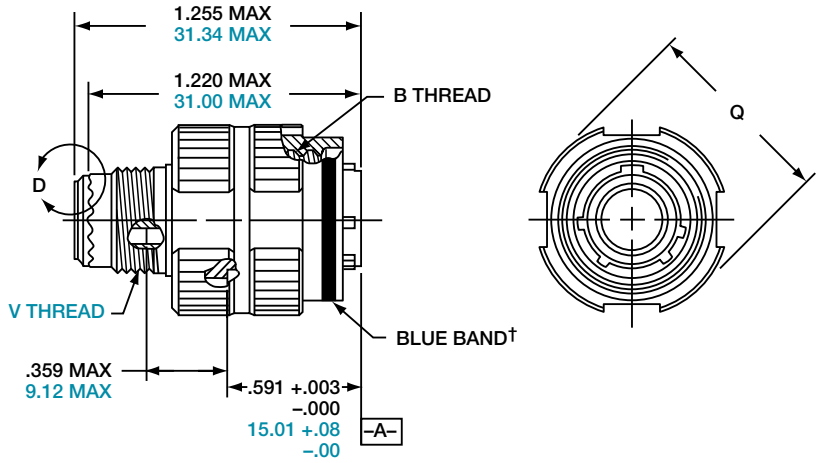


VIEW D
FOR SIZE 8 COAXIAL ONLY, RELATIVE TO –A–

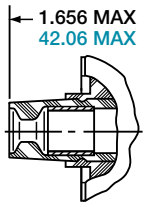


COMPOSITE

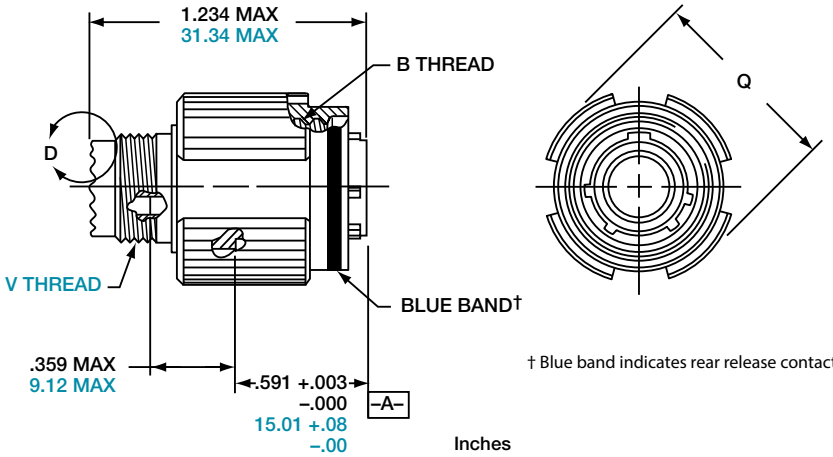


VIEW D
FOR SIZE 8 TWINAX ONLY, RELATIVE TO –A–

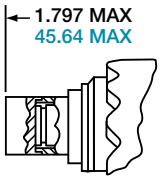


† Blue band indicates rear release contact retention system

Inches

| Shell Size | MS Shell Size Code | B Thread 0.1P-0.3L-TS-2B (Plated) | Q Dia. Max. |
|---|---|---|---|
| 9 | A | .6250 | .858 |
| 11 | B | .7500 | .984 |
| 13 | C | .8750 | 1.157 |
| 15 | D | 1.0000 | 1.280 |
| 17 | E | 1.1875 | 1.406 |
| 19 | F | 1.2500 | 1.516 |
| 21 | G | 1.3750 | 1.642 |
| 23 | H | 1.5000 | 1.768 |
| 25 | J | 1.6250 | 1.890 |

All dimensions for reference only.

Millimeters

| Shell Size | MS Shell Size Code | Q Max. | V Thread Metric |
|---|---|---|---|
| 9 | A | 21.8 | M12X1-6g |
| 11 | B | 25.0 | M15X1-6g |
| 13 | C | 29.4 | M18X1-6g |
| 15 | D | 32.5 | M22X1-6g |
| 17 | E | 35.7 | M25X1-6g |
| 19 | F | 38.5 | M28X1-6g |
| 21 | G | 41.7 | M31X1-6g |
| 23 | H | 44.9 | M34X1-6g |
| 25 | J | 48.0 | M37X1-6g |

# Flange Mounting Plug

## Commercial (TV09, TVS09, CTV09, CTVPS09)

Amphenol Aerospace



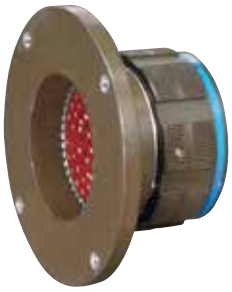

**PART NUMBER BUILDER Page 44-46**
**ONLINE CONFIGURATOR www.amphenol-aerospace.com**

Commercial

| ALUMINUM | COMPOSITE | STAINLESS STEEL |
|---|---|---|
| TVS09RF | CTVPS09RF | TVS09RK |
| TV09RW | CTV09RW | TVS09RKN |
| TV09DT | CTV09RGF | TVS09RS |
| TV09DZ | CTV09RGW | TVS09RL |
| TV09RGF | | |
| TV09RGW | | |
| TVS09RB | | |

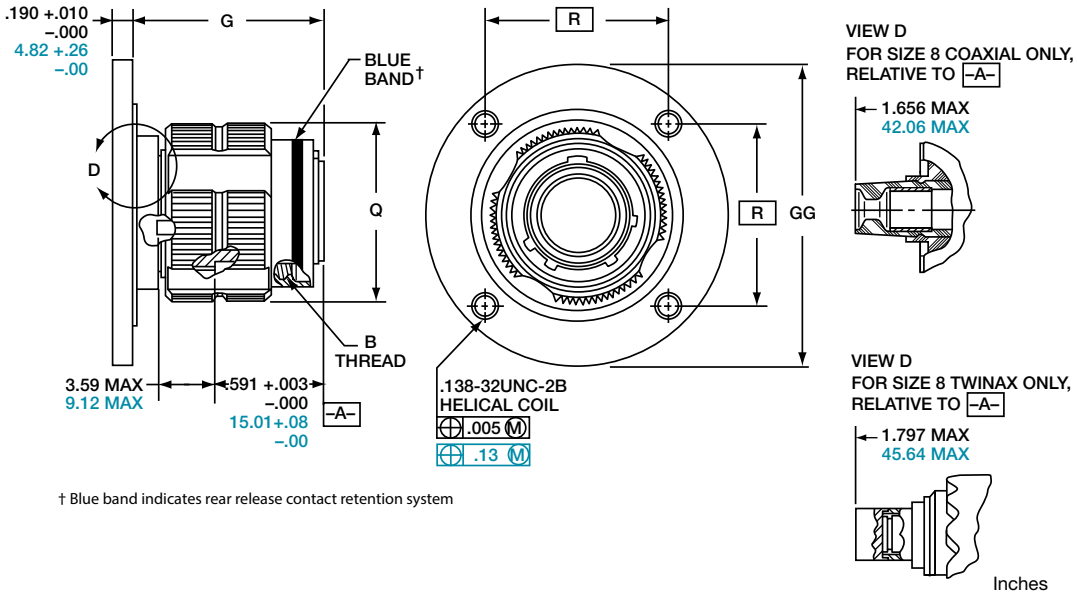


† Blue band indicates rear release contact retention system

Inches

| Shell Size | MS Shell Size Coded | B Thread 0.1P-0.3L-TS-2A (Plated) | G ±.060 | Q Dia. Max | R | GG Dia ±.005 |
|---|---|---|---|---|---|---|
| 9** | A | .6250 | 1.106 | .859 | 1.038 | 1.838 |
| 11 | B | .7500 | 1.106 | .969 | 1.115 | 1.948 |
| 13** | C | .8750 | 1.106 | 1.141 | 1.240 | 2.124 |
| 15 | D | 1.0000 | 1.106 | 1.266 | 1.327 | 2.248 |
| 17 | E | 1.1875 | 1.106 | 1.391 | 1.417 | 2.375 |
| 19 | F | 1.2500 | 1.356 | 1.500 | 1.557 | 2.495 |
| 21 | G | 1.3750 | 1.356 | 1.625 | 1.624 | 2.568 |
| 23 | H | 1.5000 | 1.356 | 1.750 | 1.713 | 2.723 |
| 25 | J | 1.6250 | 1.356 | 1.875 | 1.801 | 2.848 |

Millimeters

| Shell Size | MS Shell Size Coded | G ±.1.52 | Q Dia. Max | R | GG Dia ±.13 |
|---|---|---|---|---|---|
| 9** | A | 28.09 | 21.82 | 26.37 | 46.69 |
| 11 | B | 28.09 | 24.62 | 28.32 | 49.48 |
| 13** | C | 28.09 | 28.98 | 31.50 | 53.95 |
| 15 | D | 28.09 | 32.16 | 33.71 | 57.10 |
| 17 | E | 28.09 | 35.33 | 35.99 | 60.33 |
| 19 | F | 34.44 | 38.10 | 39.55 | 63.37 |
| 21 | G | 34.44 | 41.28 | 41.25 | 65.23 |
| 23 | H | 34.44 | 44.45 | 43.51 | 69.16 |
| 25 | J | 34.44 | 47.63 | 45.75 | 72.34 |

All dimensions for reference only
** Partially tooled. Consult Amphenol Aerospace for availability
☐ Designates true position dimensioning

# High Vibration Dualok Connector 38999 Series III Type

## Commercial Plug (TV56, TVS56, CTV56, CTVS56)



**PART NUMBER BUILDER Page 44-46**
**ONLINE CONFIGURATOR www.amphenol-aerospace.com**

Commercial

| ALUMINUM | COMPOSITE | STAINLESS STEEL |
|---|---|---|
| TVS56RF | CTVS56RF | TVS56RK |
| TV56RW | CTV56RW | TVS56RKN |
| TV56DT | CTV56RGF | TVS56RS |
| TV56DZ | CTV56RGW | TVS56RL |
| TV56RGF | | |
| TV56RGW | | |
| TVS56RB | | |

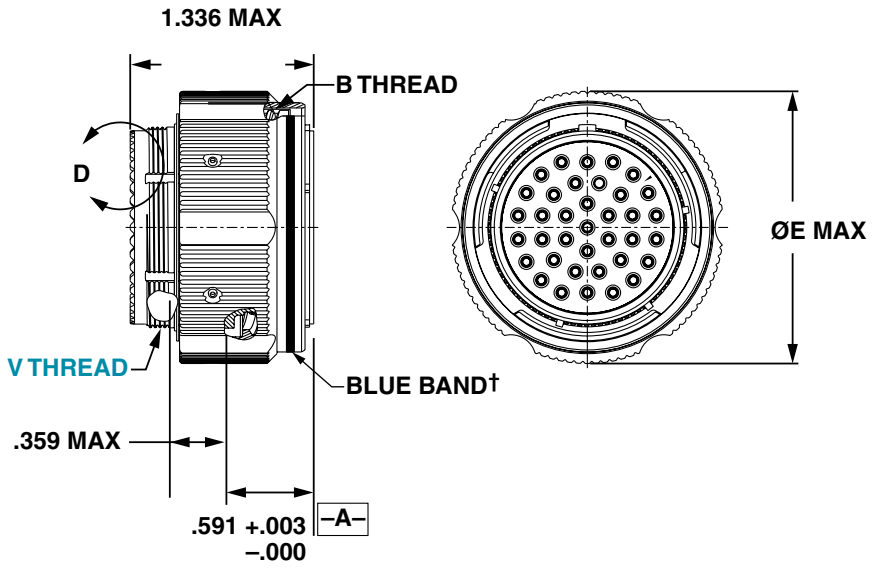


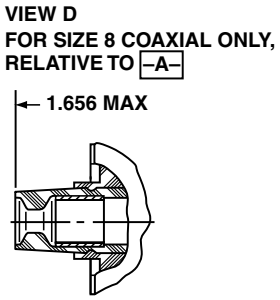


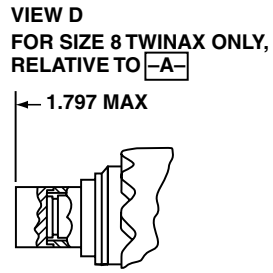


| Shell Size | B Thread 0.1-0.3L-TS-2B (Plated) | E Dia. Max. | Q Dia. Max. Metric | V Thread Metric. |
|---|---|---|---|---|
| 9 | .6250 | .953 | 24.2 | M12X1-6g |
| 11 | .7500 | 1.053 | 26.7 | M15X1-6g |
| 13 | .8750 | 1.252 | 31.8 | M18X1-6g |
| 15 | 1.0000 | 1.365 | 34.6 | M22X1-6g |
| 19 | 1.2500 | 1.605 | 40.7 | M28X1-6g |
| 21 | 1.3750 | 1.735 | 44.0 | M31X1-6g |
| 25 | 1.6250 | 1.975 | 50.1 | M37X1-6g |

# Clutch-Lok™ Plug

## Commercial (26)

Amphenol Aerospace

Designed for high vibration and harsh environments such as aircraft gas turbine engines, the CLUTCH-LOK is also an ideal choice for demanding applications such as aircraft, space and military ground vehicles. The unique clutch design of the Amphenol CLUTCH-LOK means that you don't have to compromise the need for quick, smooth mating of plugs and receptacles in order to get increased uncoupling torque.

The CLUTCH-LOK has proven to not only remain mated and pass all the Series III specification requirements, it also has proven to actually tighten itself under vibration. This is a powerful advantage over the traditionally high vibration application connectors. The CLUTCH-LOK is also a tremendous advantage in inaccessible, hard to reach areas where mating torque is difficult to apply and complete coupling is not verifiable by inspection.

### CLUTCH-LOK FEATURES AND BENEFITS:

- High degree of differential torque
- Infinite free coupling and positive metal-to-metal bottoming with each mating
- No settling back to the next ratchet tooth
- Available with stainless steel shells and Class K firewall inserts
- All the advantages of MIL-DTL-38999 Series III including EMI/RFI shielding, electrolytic erosion resistance and contact protection with recessed pins
- Enhanced connector performance at affordable prices
- Completely intermateable with all existing MIL-DTL-38999 Series III connectors
- Fully QPL'd

**PART NUMBER BUILDER Page 44-46**
**ONLINE CONFIGURATOR www.amphenol-aerospace.com**

### STAINLESS STEEL

**MTV26RK**

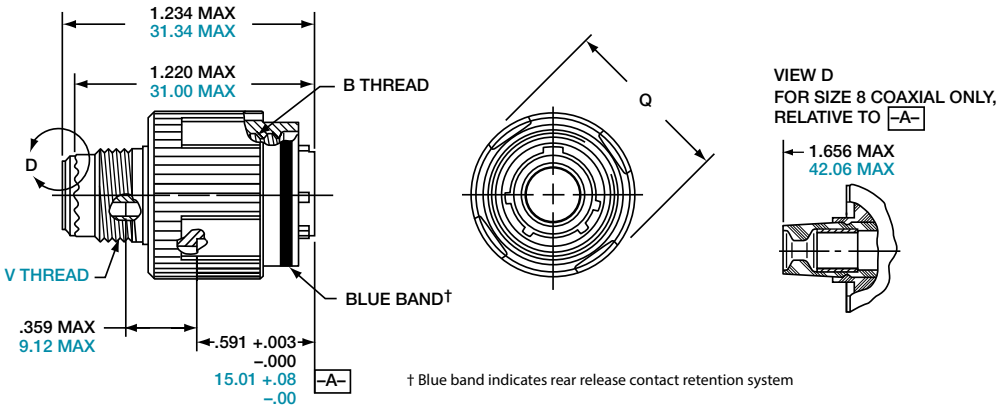


† Blue band indicates rear release contact retention system

Inches

| Shell Size | MS Shell Size Code | B Thread 0.1P-0.3L-TS-2B (Plated) | Q Dia. Max. |
|---|---|---|---|
| 9 | A | .6250 | .858 |
| 11 | B | .7500 | .984 |
| 13 | C | .8750 | 1.157 |
| 15 | D | 1.0000 | 1.280 |
| 17 | E | 1.1875 | 1.406 |
| 19 | F | 1.2500 | 1.516 |
| 21 | G | 1.3750 | 1.642 |
| 23 | H | 1.5000 | 1.768 |
| 25 | J | 1.6250 | 1.890 |

All dimensions for reference only.

Millimeters

| Shell Size | MS Shell Size Code | Q Max. | V Thread Metric |
|---|---|---|---|
| 9 | A | 21.8 | M12X1-6g |
| 11 | B | 25.0 | M15X1-6g |
| 13 | C | 29.4 | M18X1-6g |
| 15 | D | 32.5 | M22X1-6g |
| 17 | E | 35.7 | M25X1-6g |
| 19 | F | 38.5 | M28X1-6g |
| 21 | G | 41.7 | M31X1-6g |
| 23 | H | 44.9 | M34X1-6g |
| 25 | J | 48.0 | M37X1-6g |

# PCB Wall Mounting Receptacle (Back Panel Mounting)

## Commercial (TVP00 & TVPS00)

**PART NUMBER BUILDER Page 44-46**
**ONLINE CONFIGURATOR www.amphenol-aerospace.com**

Commercial

| ALUMINUM | STAINLESS STEEL |
|---|---|
| TVPS00RF | TVPS00RK |
| TVP00RW | TVPS00RKN |
| TVP00DT | TVPS00RS |
| TVP00DZ | TVPS00RL |
| TVPS00RB | |

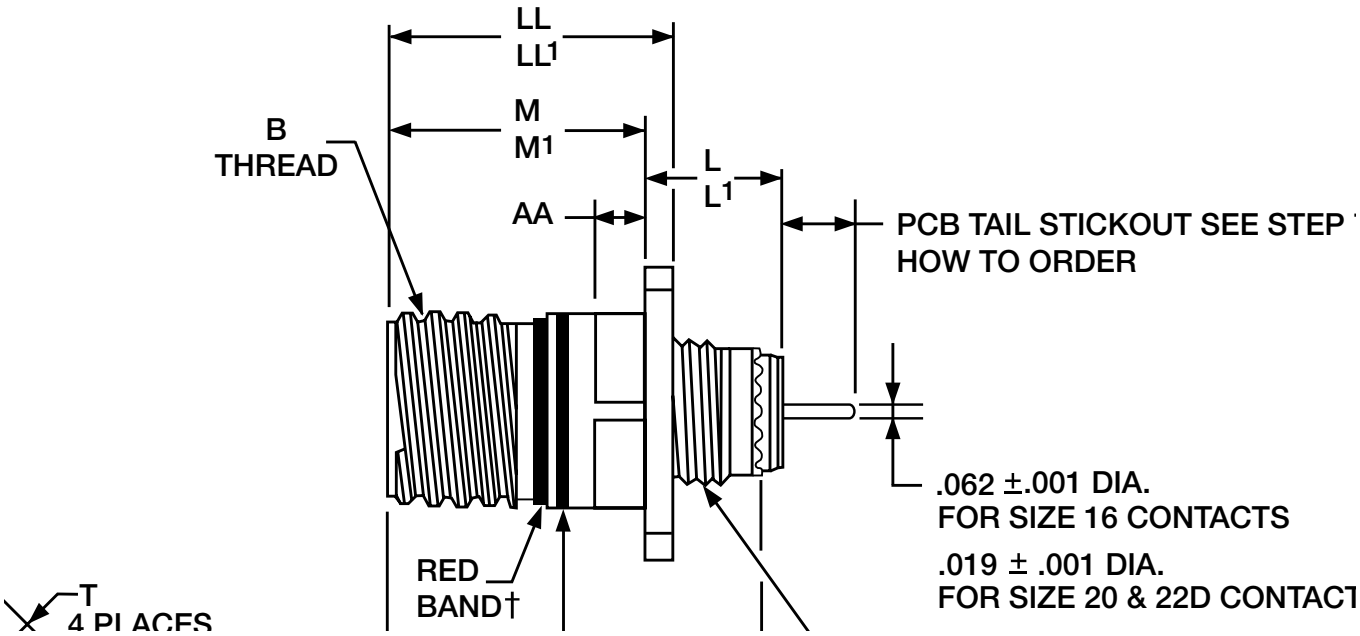


| Shell Size | B Thread Class 2A (Plated) 0.1P-0.3L-TS | L Max. (TV) | L¹ Max. (CTV) | M +.000 −.005 (TV) | M¹ +.000 −.005 (CTV) | R1 | R2 | S Max. | T +.008 −.006 | V Thread Metric | AA Max. Panel Thickness | LL +.006 −.000 (TV) | LL¹ ±.005 (CTV) | TT +.008 −.006 |
|---|---|---|---|---|---|---|---|---|---|---|---|---|---|---|
| 9 | .6250 | .469 | .514 | .820 | .773 | .719 | .594 | .948 | .128 | M12X1-6g | .234 | .905 | .908 | .216 |
| 11 | .7500 | .469 | .514 | .820 | .773 | .812 | .719 | 1.043 | .128 | M15X1-6g | .234 | .905 | .908 | .194 |
| 13 | .8750 | .469 | .514 | .820 | .773 | .906 | .812 | 1.137 | .128 | M18X1-6g | .234 | .905 | .908 | .194 |
| 15 | 1.0000 | .469 | .514 | .820 | .773 | .969 | .906 | 1.232 | .128 | M22X1-6g | .234 | .905 | .908 | .173 |
| 17 | 1.1875 | .469 | .514 | .820 | .773 | 1.062 | .969 | 1.323 | .128 | M25X1-6g | .234 | .905 | .908 | .194 |
| 19 | 1.2500 | .469 | .514 | .820 | .773 | 1.156 | 1.062 | 1.449 | .128 | M28X1-6g | .234 | .905 | .908 | .194 |
| 21 | 1.3750 | .500 | .545 | .790 | .741 | 1.250 | 1.156 | 1.575 | .128 | M31X1-6g | .204 | .905 | .904 | .194 |
| 23 | 1.5000 | .500 | .545 | .790 | .741 | 1.375 | 1.250 | 1.701 | .154 | M34X1-6g | .204 | .905 | .904 | .242 |
| 25 | 1.6250 | .500 | .545 | .790 | .741 | 1.500 | 1.375 | 1.823 | .154 | M37X1-6g | .204 | .905 | .904 | .242 |

All dimensions for reference only.
Most common options are shown; other options are available.

☐ Designates true position dimensioning

# PCB Wall Mounting Receptacle (Back Panel Mounting) (With Clinch Nuts)

## Commercial (TVP10 & TVPS10)

**PART NUMBER BUILDER Page 44-46**
**ONLINE CONFIGURATOR www.amphenol-aerospace.com**

Commercial

| ALUMINUM | STAINLESS STEEL |
|---|---|
| TVPS10RF | TVPS10RK |
| TVP10RW | TVPS10RKN |
| TVP10DT | TVPS10RS |
| TVP10DZ | TVPS10RL |
| TVPS10RB | |

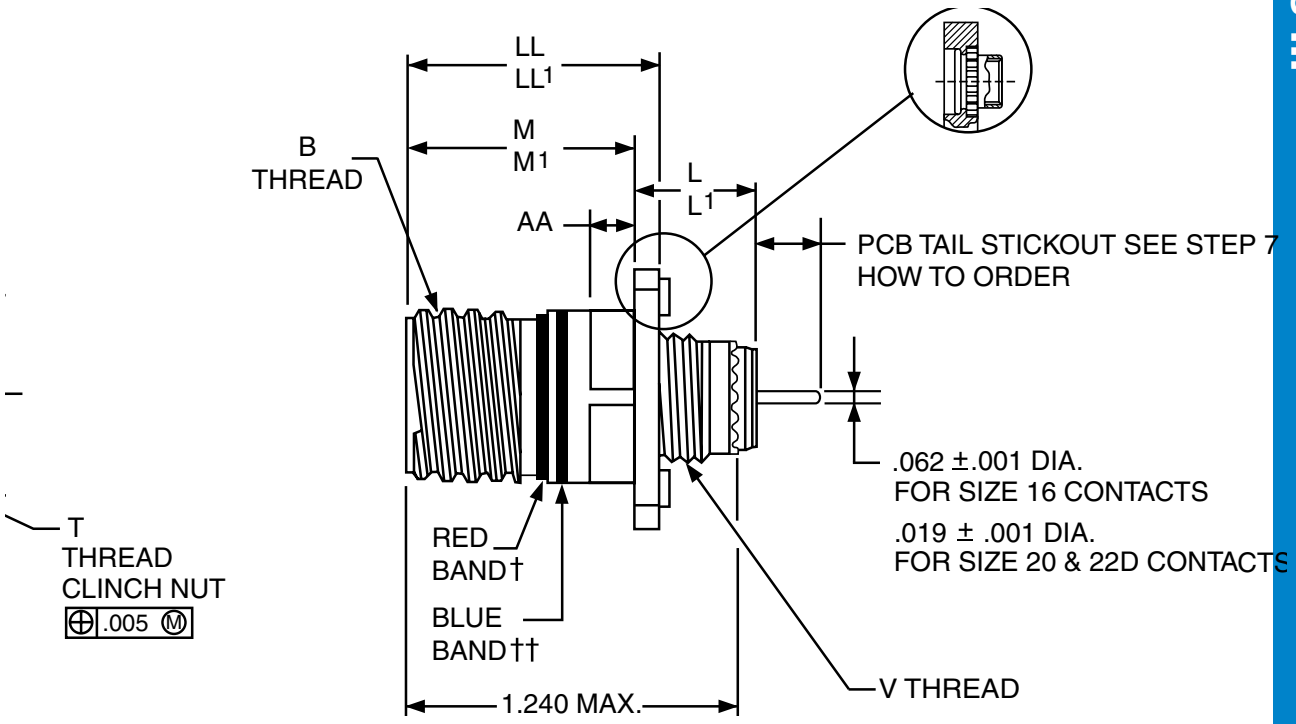


| Shell Size | B Thread Class 2A (Plated) 0.1P-0.3L-TS | L Max. (TV) | L[1] Max. (CTV) | M +.000 –.005 (TV) | M[1] +.000 –.005 (CTV) | R | S Max. | T Thread | V Thread Metric | AA Max. Panel Thickness | LL +.006 –.000 (TV) | LL[1] ±.005 (CTV) |
|---|---|---|---|---|---|---|---|---|---|---|---|---|
| 9 | .6250 | .469 | .514 | .820 | .773 | .719 | 1.094 | .112-40UNC-3B | M12X1-6g | .234 | .905 | .908 |
| 11 | .7500 | .469 | .514 | .820 | .773 | .812 | 1.187 | .112-40UNC-3B | M15X1-6g | .234 | .905 | .908 |
| 13 | .8750 | .469 | .514 | .820 | .773 | .906 | 1.281 | .112-40UNC-3B | M18X1-6g | .234 | .905 | .908 |
| 15 | 1.0000 | .469 | .514 | .820 | .773 | .969 | 1.344 | .112-40UNC-3B | M22X1-6g | .234 | .905 | .908 |
| 17 | 1.1875 | .469 | .514 | .820 | .773 | 1.062 | 1.437 | .112-40UNC-3B | M25X1-6g | .234 | .905 | .908 |
| 19 | 1.2500 | .469 | .514 | .820 | .773 | 1.156 | 1.531 | .112-40UNC-3B | M28X1-6g | .234 | .905 | .908 |
| 21 | 1.3750 | .500 | .545 | .790 | .741 | 1.250 | 1.625 | .112-40UNC-3B | M31X1-6g | .204 | .905 | .904 |
| 23 | 1.5000 | .500 | .545 | .790 | .741 | 1.375 | 1.750 | .138-32UNC-3B | M34X1-6g | .204 | .905 | .904 |
| 25 | 1.6250 | .500 | .545 | .790 | .741 | 1.500 | 1.875 | .138-32UNC-3B | M37X1-6g | .204 | .905 | .904 |

All dimensions for reference only.
Consult Amphenol for more information on ordering connectors with clinch nuts.
Most common options are shown; other options are available.

☐ Designates true position dimensioning
† Red band indicates fully mated
†† Blue band indicates rear release contact retention system

# PCB Wall Mounting Double Flange Receptacle

## Commercial (TVP40 & TVPS40)

**PART NUMBER BUILDER Page 44-46**
**ONLINE CONFIGURATOR www.amphenol-aerospace.com**

Commercial

| ALUMINUM | STAINLESS STEEL |
|---|---|
| TVPS40RF | TVPS40RK |
| TVP40RW | TVPS40RKN |
| TVP40DT | TVPS40RS |
| TVP40DZ | TVPS40RL |
| TVPS40RB | |

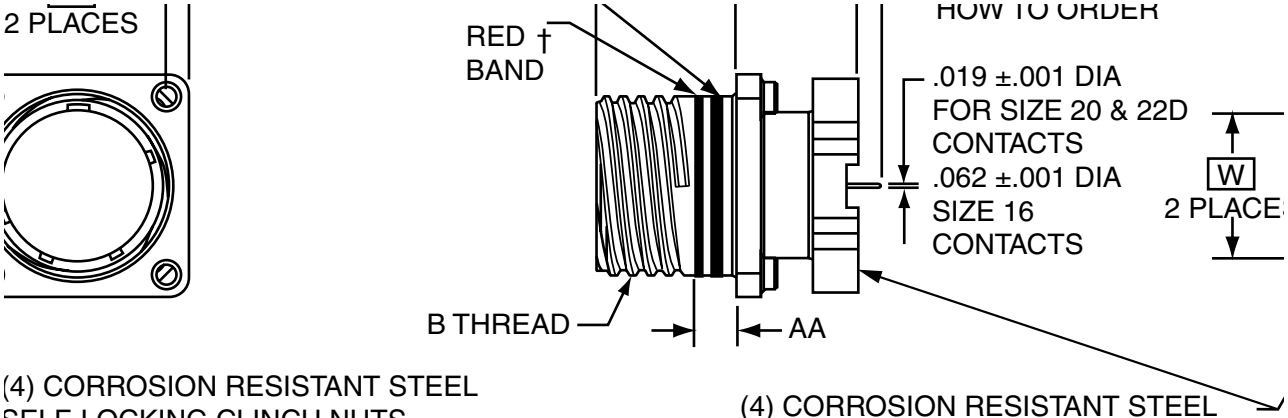


(4) CORROSION RESISTANT STEEL
SELF-LOCKING CLINCH NUTS
.112-40 UNC-3B PER MIL-N-45938/6-4C
EXCEPT FOR TV40 SHELL SIZES 23 & 25:
.138-32 UNC-3B PER MIL-N-45938/6-6C

⊕ | ∅ .005 Ⓜ

(4) CORROSION RESISTANT STEEL
.112-40 UNC-3B HELICAL INSERTS

⊕ | ∅ .005 Ⓜ

| Shell Size | MS Shell Size Code (For Ref.) | A Dia. ±.005 (TV) | A Dia. ±.005 (CTV) | B Thread Class 2A (Plated) 0.1P-0.3L-TS | M +.000 –.005 | M[1] ±.003 (CTV) | R (Panel Mount) (CTV) | R (Panel Mount (TV) | S Max. (TV) | S Max. (CTV) | AA Max. Panel Thickness | PCB Mounting Dimensions | |
|---|---|---|---|---|---|---|---|---|---|---|---|---|---|
| | | | | | | | | | | | | T Dia. (TV) TP | W (CTV) TP |
| 9 | A | NA | 1.016 | .6250 | .820 | .770 | .719 | N/A | NA | .949 | .234 | NA | .532 |
| 11 | B | 1.062 | 1.148 | .7500 | .820 | .770 | .812 | .766 | 1.187 | 1.042 | .234 | . .850 | .601 |
| 13 | C | 1.250 | 1.250 | .8750 | .820 | .770 | .906 | .859 | 1.281 | 1.136 | .234 | .994 | .703 |
| 15 | D | 1.375 | 1.375 | 1.0000 | .820 | .770 | .969 | .938 | 1.344 | 1.230 | .234 | 1.119 | .791 |
| 17 | E | 1.500 | 1.500 | 1.1875 | .820 | .770 | 1.062 | 1.016 | 1.437 | 1.323 | .234 | 1.237 | .875 |
| 19 | F | 1.625 | 1.625 | 1.2500 | .820 | .770 | 1.156 | 1.110 | 1.531 | 1.449 | .234 | 1.379 | .975 |
| 21 | G | 1.750 | 1.750 | 1.3750 | .820 | .738 | 1.250 | 1.206 | 1.625 | 1.573 | .204 | 1.489 | 1.053 |
| 23 | H | 1.875 | 1.875 | 1.5000 | .820 | .738 | 1.375 | 1.312 | 1.750 | 1.699 | .204 | 1.619 | 1.195 |
| 25 | J | 2.000 | 2.000 | 1.6250 | .820 | .738 | 1.500 | 1.438 | 1.875 | 1.823 | .204 | 1.744 | 1.233 |

All dimensions for reference only.

† Red band indicates fully mated
†† Blue band indicates rear release contact retention system

# PCB Box Mounting Receptacle

## Commercial (TVP02 & TVPS02)

**PART NUMBER BUILDER Page 44-46**
**ONLINE CONFIGURATOR www.amphenol-aerospace.com**

Commercial

| ALUMINUM | STAINLESS STEEL |
|---|---|
| TVPS02RF | TVPS02RK |
| TVP02RW | TVPS02RKN |
| TVP02DT | TVPS02RS |
| TVP02DZ | TVPS02RL |
| TVPS02RB | |

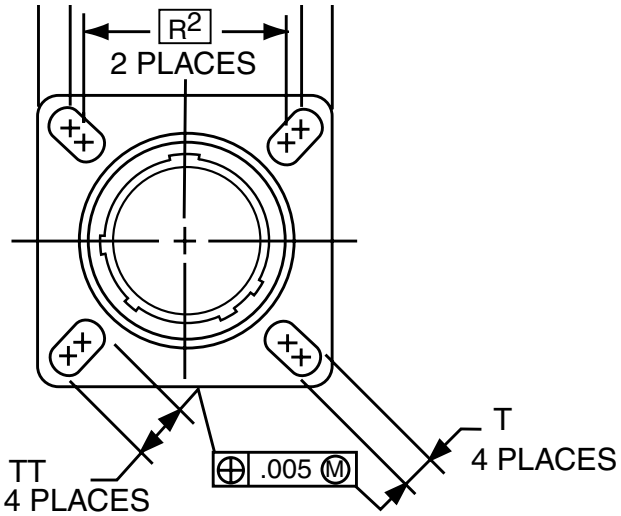


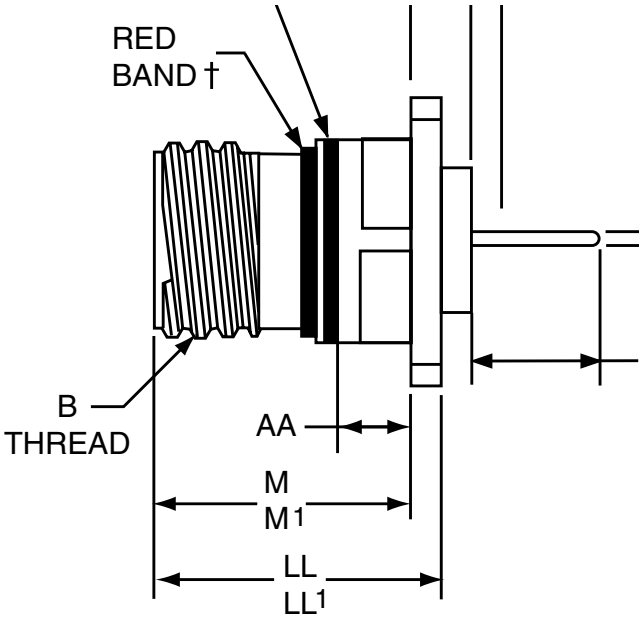


| Shell Size | B Thread Class 2A (Plated) 0.1P-0.3L-TS | L Max. (TV) | L[1] Max. (CTV) | M +.000 −.005 (TV) | M[1] +.000 −.005 (CTV) | R1 | R2 | S Max. | T +.008 −.006 | AA Max. Panel Thickness | LL +.006 −.000 (TV) | LL[1] ±.005 (CTV) | TT ±.008 |
|---|---|---|---|---|---|---|---|---|---|---|---|---|---|
| 9 | .6250 | .205 | .250 | .820 | .773 | .719 | .594 | .948 | .128 | .234 | .905 | .908 | .216 |
| 11 | .7500 | .205 | .250 | .820 | .773 | .812 | .719 | 1.043 | .128 | .234 | .905 | .908 | .194 |
| 13 | .8750 | .205 | .250 | .820 | .773 | .906 | .812 | 1.137 | .128 | .234 | .905 | .908 | .194 |
| 15 | 1.0000 | .205 | .250 | .820 | .773 | .969 | .906 | 1.232 | .128 | .234 | .905 | .908 | .173 |
| 17 | 1.1875 | .205 | .250 | .820 | .773 | 1.062 | .969 | 1.323 | .128 | .234 | .905 | .908 | .194 |
| 19 | 1.2500 | .205 | .250 | .820 | .773 | 1.156 | 1.062 | 1.449 | .128 | .234 | .905 | .908 | .194 |
| 21 | 1.3750 | .235 | .280 | .790 | .741 | 1.250 | 1.156 | 1.575 | .128 | .204 | .905 | .904 | .194 |
| 23 | 1.5000 | .235 | .280 | .790 | .741 | 1.375 | 1.250 | 1.701 | .154 | .204 | .905 | .904 | .242 |
| 25 | 1.6250 | .235 | .280 | .790 | .741 | 1.500 | 1.375 | 1.823 | .154 | .204 | .905 | .904 | .242 |

All dimensions for reference only.
Most common options are shown; other options are available.

☐ Designates true position dimensioning
† Red band indicates fully mated
†† Blue band indicates rear release contact retention system

# PCB Box Mounting Receptacle (With Clinch Nuts)

## Commercial (TVP12 & TVPS12)



**PART NUMBER BUILDER Page 44-46**
**ONLINE CONFIGURATOR www.amphenol-aerospace.com**

Commercial

| ALUMINUM | STAINLESS STEEL |
|---|---|
| TVPS12RF | TVPS12RK |
| TVP12RW | TVPS12RKN |
| TVP12DT | TVPS12RS |
| TVP12DZ | TVPS12RL |
| TVPS12RB | |

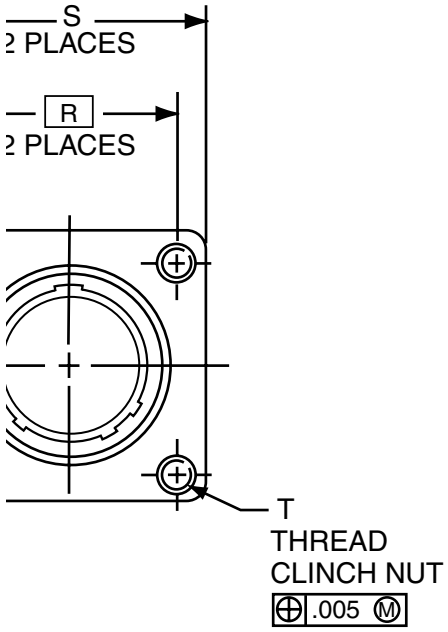


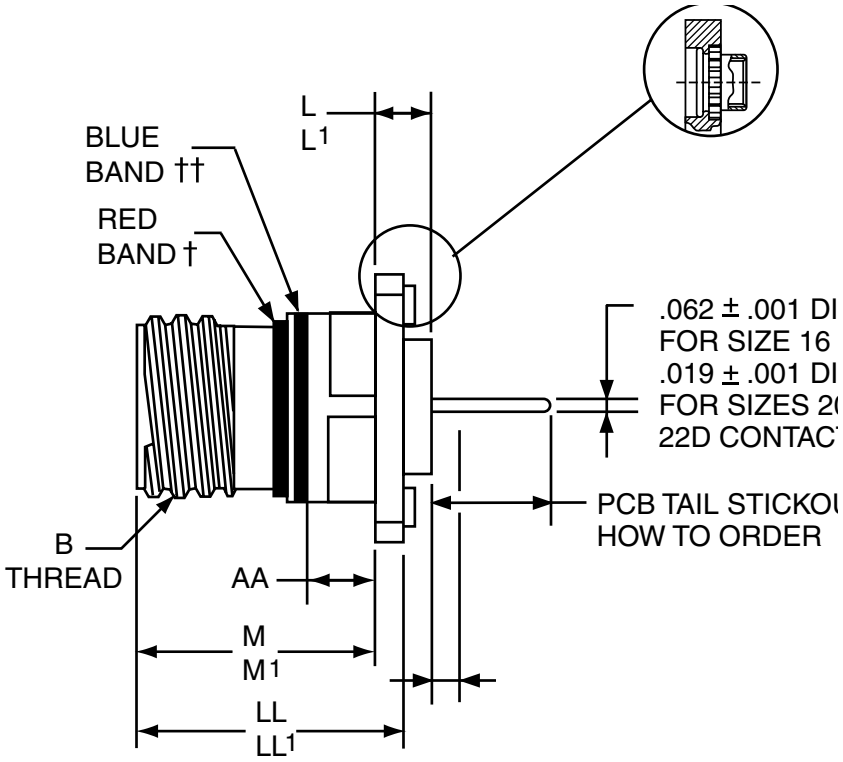


| Shell Size | B Thread Class 2A (Plated) 0.1P-0.3L-TS | L Max. (TV) | L¹ Max. (CTV) | M +.000 −.005 (TV) | M¹ +.000 −.005 (CTV) | R | S Max. | T Thread | AA Max. Panel Thickness | LL +.006 −.000 (TV) | LL¹ +.006 −.000 (CTV) |
|---|---|---|---|---|---|---|---|---|---|---|---|
| 9 | .6250 | .205 | .250 | .820 | .773 | .719 | 1.031 | .112-40UNC-3B | .234 | .905 | .908 |
| 11 | .7500 | .205 | .250 | .820 | .773 | .812 | 1.125 | .112-40UNC-3B | .234 | .905 | .908 |
| 13 | .8750 | .205 | .250 | .820 | .773 | .906 | 1.172 | .112-40UNC-3B | .234 | .905 | .908 |
| 15 | 1.0000 | .205 | .250 | .820 | .773 | .969 | 1.281 | .112-40UNC-3B | .234 | .905 | .908 |
| 17 | 1.1875 | .205 | .250 | .820 | .773 | 1.062 | 1.375 | .112-40UNC-3B | .234 | .905 | .908 |
| 19 | 1.2500 | .205 | .250 | .820 | .773 | 1.156 | 1.469 | .112-40UNC-3B | .234 | .905 | .908 |
| 21 | 1.3750 | .235 | .280 | .790 | .741 | 1.250 | 1.562 | .112-40UNC-3B | .204 | .905 | .904 |
| 23 | 1.5000 | .235 | .280 | .790 | .741 | 1.375 | 1.750 | .112-40UNC-3B | .204 | .905 | .904 |
| 25 | 1.6250 | .235 | .280 | .790 | .741 | 1.500 | 1.875 | .112-40UNC-3B | .204 | .905 | .904 |

All dimensions for reference only.
Most common options are shown; other options are available.

☐ Designates true position dimensioning
† Red band indicates fully mated
†† Blue band indicates rear release contact retention system

# PCB Jam Nut Receptacle

## Commercial (TV07 & TVS07)

**PART NUMBER BUILDER Page 44-46**
**ONLINE CONFIGURATOR www.amphenol-aerospace.com**

Commercial

| ALUMINUM | STAINLESS STEEL |
|---|---|
| TVS07RF | TVS07RK |
| TV07RW | TVS07RKN |
| TV07DT | TVS07RS |
| TV07DZ | TVS07RL |
| TVS07RB | |

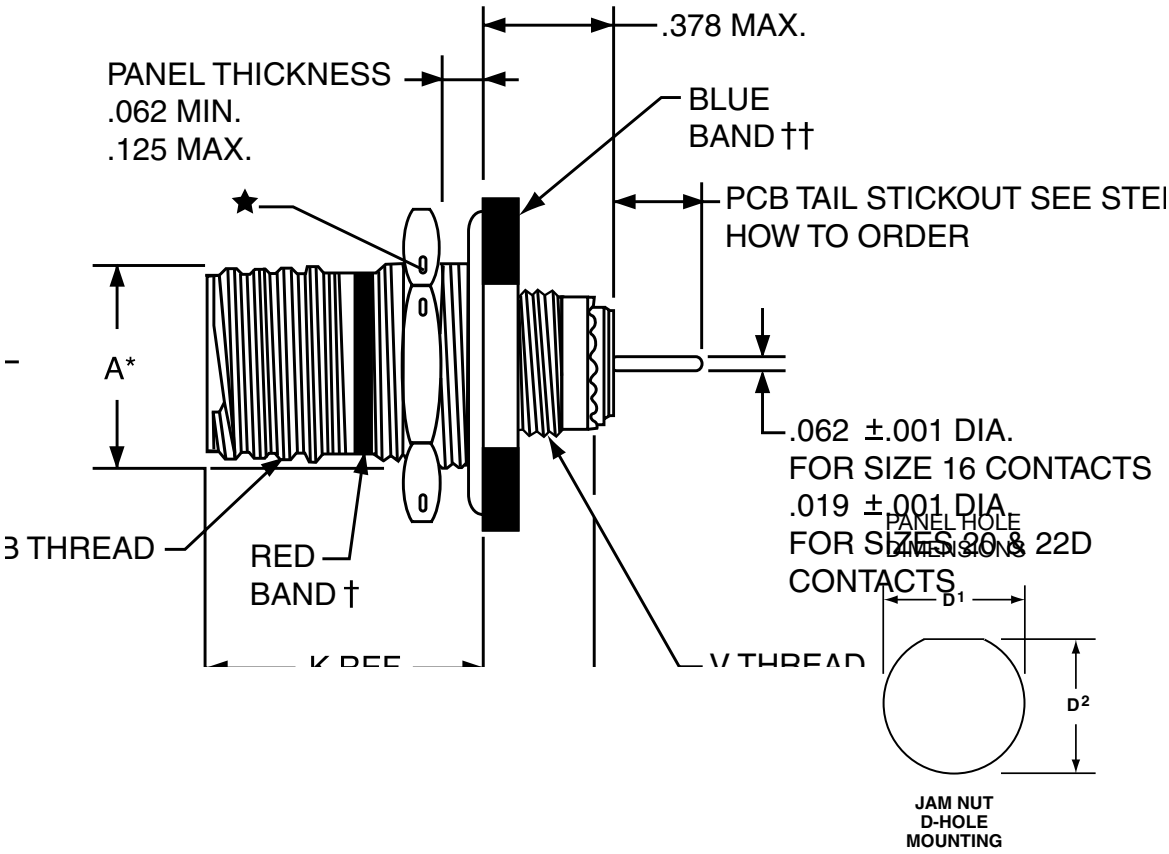


| Shell Size | A* +.000 −.010 | B Thread Class 2A (Plated) 0.1P-0.3L-TS | C Max. | D¹ +.010 −.000 | D² +.010 −.000 | H Hex +.017 −.016 | S ±.010 | T +.010 −.000 | V Thread Metric |
|---|---|---|---|---|---|---|---|---|---|
| 9 | .669 | .6250 | 1.199 | .700 | .670 | .875 | 1.062 | .697 | M12X1-6g |
| 11 | .769 | .7500 | 1.386 | .825 | .770 | 1.000 | 1.250 | .822 | M15X1-6g |
| 13 | .955 | .8750 | 1.511 | 1.010 | .955 | 1.188 | 1.375 | 1.007 | M18X1-6g |
| 15 | 1.084 | 1.0000 | 1.636 | 1.135 | 1.085 | 1.312 | 1.500 | 1.134 | M22X1-6g |
| 17 | 1.208 | 1.1875 | 1.761 | 1.260 | 1.210 | 1.438 | 1.625 | 1.259 | M25X1-6g |
| 19 | 1.333 | 1.2500 | 1.949 | 1.385 | 1.335 | 1.562 | 1.812 | 1.384 | M28X1-6g |
| 21 | 1.459 | 1.3750 | 2.073 | 1.510 | 1.460 | 1.688 | 1.938 | 1.507 | M31X1-6g |
| 23 | 1.575 | 1.5000 | 2.199 | 1.635 | 1.585 | 1.812 | 2.062 | 1.634 | M34X1-6g |
| 25 | 1.709 | 1.6250 | 2.323 | 1.760 | 1.710 | 2.000 | 2.188 | 1.759 | M37X1-6g |

All dimensions for reference only.
Most common options are shown;
other options are available.

† Red band indicates fully mated
†† Blue band indicates rear release contact retention system
★ .059 dia. min. 3 lockwire holes. Formed lockwire hole design (6 holes) is optional.*"D" shaped mounting hole dimensions

# PCB Jam Nut, Double Flange Receptacles

## Commercial (TVP47 & TVPS47)

**PART NUMBER BUILDER Page 44-46**
**ONLINE CONFIGURATOR www.amphenol-aerospace.com**

Commercial

| ALUMINUM | STAINLESS STEEL |
|---|---|
| TVPS47RF | TVPS47RK |
| TVP47RW | TVPS47RKN |
| TVP47DT | TVPS47RS |
| TVP47DZ | TVPS47RL |

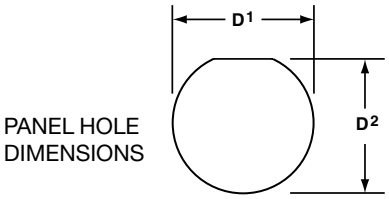


JAM NUT
D-HOLE
MOUNTING

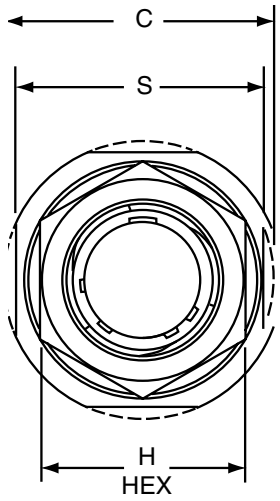


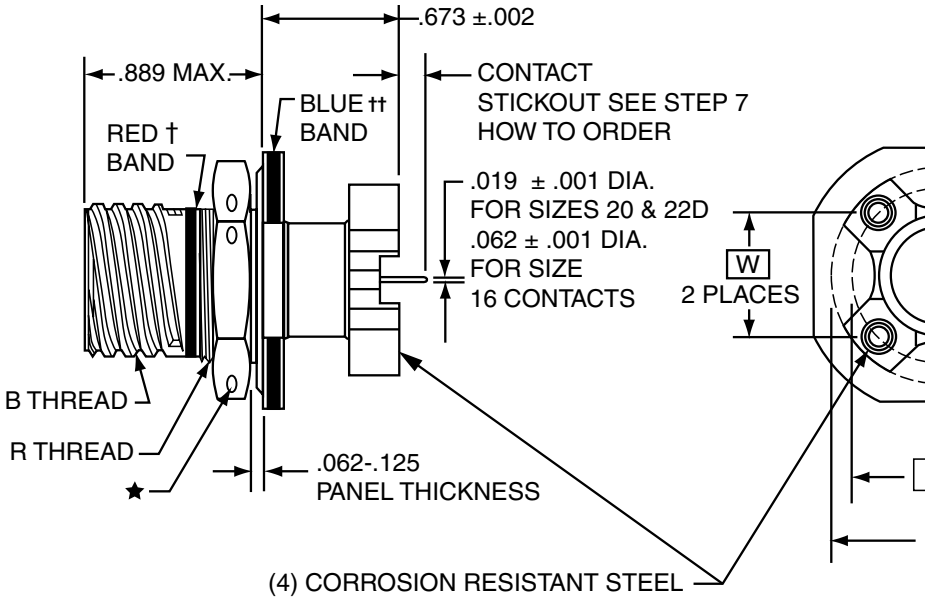


| Shell Size | MS Shell Size Code (For Ref.) | B Thread Class 2A 0.1P-0.3L-TS (Plated) | C ±.005 (Jam Nut Flange Dia. | D¹ +.010 –.000 | D² +.000 –.010 | H Hex +.017 –.016 | M Dia. ±.005 (TV ) | M Dia. ±.005 (CTV) | R Thread Metric (Plated) | S +.011 –.010 | PCB Mounting Dimensions V Dia. (TV) TP | PCB Mounting Dimensions W (CTV) TP |
|---|---|---|---|---|---|---|---|---|---|---|---|---|
| 9 | A | .6250 | 1.188 | .700 | .670 | .875 | 1.062 | 1.016 | M17X1-6g0.100R | 1.062 | .753 | .532 |
| 11 | B | .7500 | 1.375 | .825 | .770 | 1.000 | 1.062 | 1.148 | M20X1-6g0.100R | 1.250 | .850 | .601 |
| 13 | C | .8750 | 1.500 | 1.010 | .955 | 1.188 | 1.250 | 1.250 | M25X1-6g0.100R | 1.375 | .994 | .703 |
| 15 | D | 1.0000 | 1.625 | 1.135 | 1.085 | 1.312 | 1.375 | 1.375 | M28X1-6g0.100R | 1.500 | 1.119 | .791 |
| 17 | E | 1.1875 | 1.750 | 1.260 | 1.210 | 1.438 | 1.500 | 1.500 | M32X1-6g0.100R | 1.625 | 1.237 | .875 |
| 19 | F | 1.2500 | 1.937 | 1.385 | 1.335 | 1.562 | 1.625 | 1.625 | M35X1-6g0.100R | 1.812 | 1.379 | .975 |
| 21 | G | 1.3750 | 2.062 | 1.510 | 1.460 | 1.688 | 1.750 | 1.750 | M38X1-6g0.100R | 1.937 | 1.489 | 1.053 |
| 23 | H | 1.5000 | 2.188 | 1.635 | 1.585 | 1.812 | 1.875 | 1.875 | M41X1-6g0.100R | 2.062 | 1.644 | 1.145 |
| 25 | J | 1.6250 | 2.312 | 1.760 | 1.710 | 2.000 | 2.000 | 2.000 | M44X1-6g0.100R | 2.188 | 1.744 | 1.233 |

All dimensions for reference only.
† Red band indicates fully mated
†† Blue band indicates rear release contact retention system.

★ .059 dia. min. (1.5 dia. min.) 3 lockwire holes.
Formed lockwire hole design (6 holes) is optional.

# PCB Hermetic Box Mounting Receptacle

## Commercial

Amphenol Aerospace

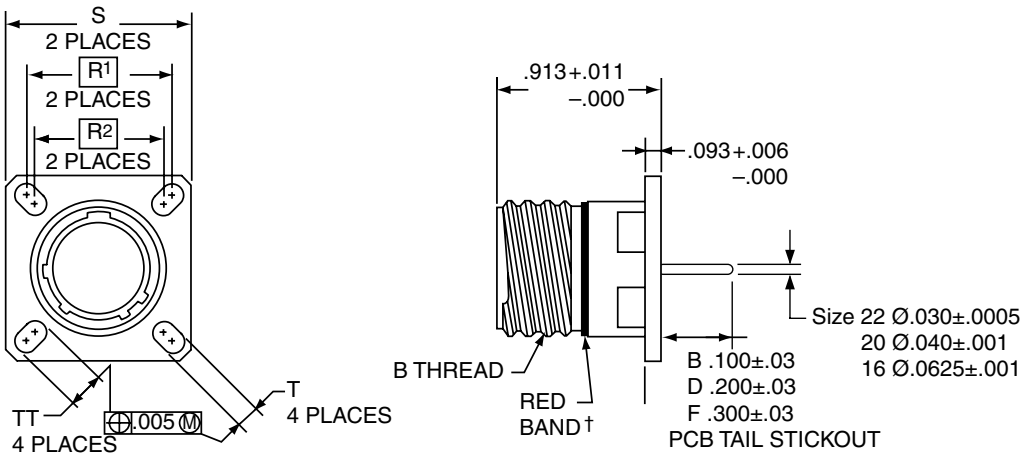


| PART # See chart below | 1. Base Number | 2. Coded Shell Size | 3. Insert Arrg. | 4. Contact Type/Alt. Keying | 5. Shell Finish | 6. Tail Length |
|---|---|---|---|---|---|---|
| | 10-626 | 501 | -35 | P | 1 | B |

## HOW TO ORDER

### 1. BASE NUMBER:

| | |
|---|---|
| 10-626 | Base Number for MIL-DTL-38999 Series III Hermetic with PCB Tail |

### 2. SELECT A CODED SHELL SIZE:

See chart below 501-509, designates size 9-25 shell size.
Example: 501 = Size 9 Shell

### 3. SELECT AN INSERT ARRANGEMENT:

Refer to insert availability chart on page 2-5 and pin-out illustrations on pages 14-28. Please enter the second number which represents the Insert Arrangement number.

| | |
|---|---|
| -35 | Designates Insert Arrangement Number |

### 4. CONTACT TYPE/ALTERNATE KEYING POSITIONS:

Refer to page 46 for alternate rotation letters to use.

| | |
|---|---|
| P | Designates Pin Contacts in Normal Position |
| S | Designates Socket Contacts in Normal Position |

### 5. SELECT A SHELL FINISH:

| | |
|---|---|
| 1 | Hermetic seal, passivated Stainless Steel, 200°C |
| 2 | Hermetic seal, Stainless Steel w/Nickel Plate |
| 3 | Carbon Steel w/reflowed tin plate |

### 6. SELECT A TAIL LENGTH:

| | |
|---|---|
| B | .100±.03 |
| D | .200±.03 |
| F | .300±.03 |

| Shell Size | Part Number | B Thread 0.1P-0.3L-TS (Plated) | R1 | R2 | S ±.010 | T ±.008 | TT ±.008 |
|---|---|---|---|---|---|---|---|
| 9 | 10-626501-XXX | .6250 | .719 | .594 | .938 | .128 | .216 |
| 11 | 502-XXX | .7500 | .812 | .719 | 1.031 | .128 | .194 |
| 13 | 503-XXX | .8750 | .906 | .812 | 1.125 | .128 | .194 |
| 15 | 504-XXX | 1.0000 | .969 | .906 | 1.219 | .128 | .173 |
| 17 | 505-XXX | 1.1875 | 1.062 | .969 | 1.312 | .128 | .194 |
| 19 | 506-XXX | 1.2500 | 1.156 | 1.062 | 1.438 | .128 | .194 |
| 21 | 507-XXX | 1.3750 | 1.250 | 1.156 | 1.562 | .128 | .194 |
| 23 | 508-XXX | 1.5000 | 1.375 | 1.250 | 1.688 | .154 | .242 |
| 25 | 509-XXX | 1.6250 | 1.500 | 1.375 | 1.812 | .154 | .242 |

All dimensions for reference.

☐ Designates true position dimensioning

† Red band indicates fully mated

NOTE: Consult Amphenol Aerospace for availability of non-glass-sealed versions with printed circuit tail contacts.

A

# PCB Hermetic Jam Nut Receptacle

## Commercial

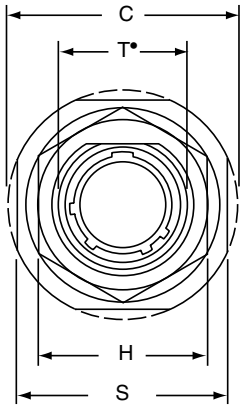


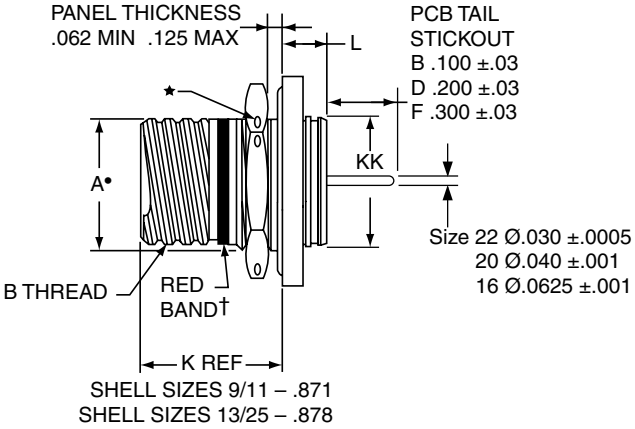


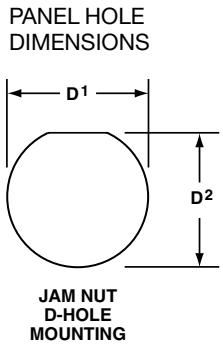


| | 1. | 2. | 3. | 4. | 5. | 6. |
|---|---|---|---|---|---|---|
| **PART #** See chart below | Base Number | Coded Shell Size | Insert Arrg. | Contact Type/Alt. Keying | Shell Finish | Tail Length |
| | 10-626 | 471 | -35 | P | 1 | B |

## HOW TO ORDER

### 1. BASE NUMBER:

| | |
|---|---|
| 10-626 | Base Number for MIL-DTL-38999 Series III Hermetic with PCB Tail |

### 2. SELECT A CODED SHELL SIZE:

See chart below 471-479, designates size 9-25 shell size.

### 3. SELECT AN INSERT ARRANGEMENT:

Refer to insert availability chart on page 2-5 and pin-out illustrations on pages 14-28. Please enter the second number which represents the Insert Arrangement number.

| | |
|---|---|
| -35 | Designates Insert Arrangement Number |

### 4. CONTACT TYPE/ALTERNATE KEYING POSITIONS:

Refer to page 46 for alternate rotation letters to use.

| | |
|---|---|
| P | Designates Pin Contacts in Normal Position |
| S | Designates Socket Contacts in Normal Position |

### 5. SELECT A SHELL FINISH:

| | |
|---|---|
| 1 | Hermetic seal, passivated Stainless Steel, 200°C |
| 2 | Hermetic seal, Stainless Steel w/Nickel Plate |
| 3 | Carbon Steel w/reflowed tin plate |

### 6. SELECT A TAIL LENGTH:

| | |
|---|---|
| B | 100 ±.03 |
| D | .200 ±.03 |
| F | .300 ±.03 |

† Red band indicates fully mated

★ .059 dia. min. (1.5 dia. min.) 3 lockwire holes. Formed lockwire hole design (6 holes) is optional.

| Shell Size | Part Number | A+ +.000 –.010 | B Thread Class 2A 0.1P-0.3L-TS (Plated) | C Max | D1 +.010 –.000 | D1 +.000 –.010 | H Hex +.017 –.016 | L Max | S ±.010 | T+ +.010 –.000 | KK +.011 –.000 |
|---|---|---|---|---|---|---|---|---|---|---|---|
| 9 | **10-626**471-XXX | .669 | .6250 | 1.199 | .700 | .670 | .875 | .357 | 1.062 | .697 | .642 |
| 11 | 472-XXX | .769 | .7500 | 1.386 | .825 | .770 | 1.000 | .357 | 1.250 | .822 | .766 |
| 13 | 473-XXX | .955 | .8750 | 1.511 | 1.010 | .955 | 1.188 | .357 | 1.375 | 1.007 | .892 |
| 15 | 474-XXX | 1.084 | 1.0000 | 1.636 | 1.135 | 1.085 | 1.312 | .357 | 1.500 | 1.134 | 1.018 |
| 17 | 475-XXX | 1.208 | 1.1875 | 1.761 | 1.260 | 1.210 | 1.438 | .357 | 1.625 | 1.259 | 1.142 |
| 19 | 476-XXX | 1.333 | 1.2500 | 1.949 | 1.385 | 1.335 | 1.562 | .381 | 1.182 | 1.384 | 1.268 |
| 21 | 477-XXX | 1.459 | 1.3750 | 2.073 | 1.510 | 1.460 | 1.688 | .381 | 1.938 | 1.507 | 1.392 |
| 23 | 478-XXX | 1.575 | 1.5000 | 2.199 | 1.635 | 1.585 | 1.812 | .381 | 2.062 | 1.634 | 1.518 |
| 25 | 479-XXX | 1.709 | 1.6250 | 2.323 | 1.760 | 1.710 | 2.000 | .381 | 2.188 | 1.759 | 1.642 |

All dimensions for reference only.

# PCB Hermetic Solder Mounting Receptacle

## Commercial

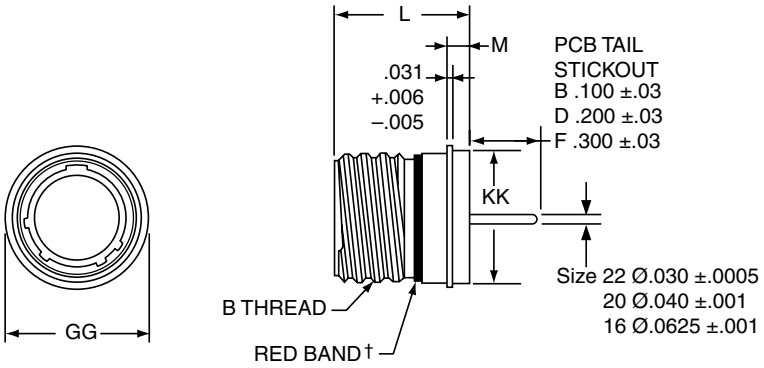


| | 1. | 2. | 3. | 4. | 5. | 6. |
|---|---|---|---|---|---|---|
| **PART #** See chart below | Base Number | Coded Shell Size | Insert Arrg. | Contact Type/Alt. Keying | Shell Finish | Tail Length |
| | 10-626 | 481 | -35 | P | 1 | B |

## HOW TO ORDER

### 1. BASE NUMBER:

| | |
|---|---|
| 10-626 | Base Number for MIL-DTL-38999 Series III Hermetic with PCB Tail |

### 2. SELECT A CODED SHELL SIZE:

See chart below 481-489, designates size 9-25 shell size.

### 3. SELECT AN INSERT ARRANGEMENT:

Refer to insert availability chart on page 2-5 and pin-out illustrations on pages 14-28. Please enter the second number which represents the Insert Arrangement number.

| | |
|---|---|
| -35 | Designates Insert Arrangement Number |

### 4. CONTACT TYPE/ALTERNATE KEYING POSITIONS:

Refer to page 46 for alternate rotation letters to use.

| | |
|---|---|
| P | Designates Pin Contacts in Normal Position |
| S | Designates Socket Contacts in Normal Position |

### 5. SELECT A SHELL FINISH:

| | |
|---|---|
| 1 | Hermetic seal, passivated Stainless Steel, 200°C |
| 2 | *Hermetic seal, Stainless Steel w/Nickel Plate |
| 3 | *Carbon Steel w/reflowed tin plate |

### 6. SELECT A TAIL LENGTH:

| | |
|---|---|
| B | .100±.03 |
| D | .200±.03 |
| F | .300±.03 |

† Red band indicates fully mated

| Shell Size | Part Number | B Thread Class 2A 0.1P-0.3L-TS (Plated) | L +.011 –.005 | M +.006 –.005 | GG Dia. +.011 –.010 | KK Dia +.011 –.005 |
|---|---|---|---|---|---|---|
| 9 | **10-626**481-XXX | .6250 | .806 | .125 | .750 | .672 |
| 11 | 482-XXX | .7500 | .806 | .125 | .844 | .781 |
| 13 | 483-XXX | .8750 | .806 | .125 | .969 | .906 |
| 15 | 484-XXX | 1.0000 | .806 | .125 | 1.094 | 1.031 |
| 17 | 485-XXX | 1.1875 | .806 | .125 | 1.218 | 1.156 |
| 19 | 486-XXX | 1.2500 | .806 | .125 | 1.312 | 1.250 |
| 21 | 487-XXX | 1.3750 | .806 | .125 | 1.438 | 1.375 |
| 23 | 488-XXX | 1.5000 | .838 | .156 | 1.563 | 1.500 |
| 25 | 489-XXX | 1.6250 | .838 | .156 | 1.688 | 1.625 |

# PCB Hermetic Weld Mounting Receptacle

## Commercial

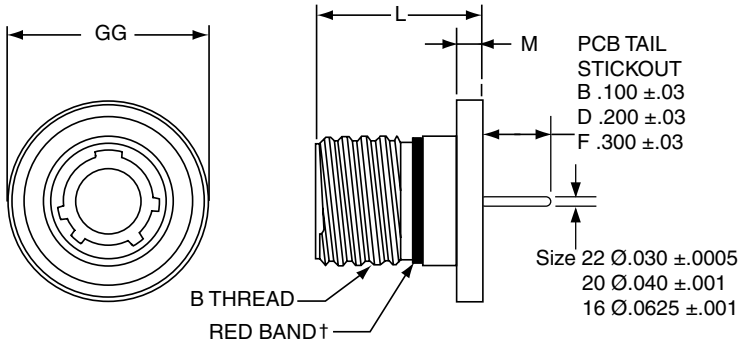


† Red band indicates fully mated

| PART # See chart below | 1. Base Number | 2. Coded Shell Size | 3. Insert Arrg. | 4. Contact Type/Alt. Keying | 5. Shell Finish | 6. Tail Length |
|---|---|---|---|---|---|---|
| | 10-626 | 491 | -35 | P | 1 | B |

## HOW TO ORDER

### 1. BASE NUMBER:

| | |
|---|---|
| 10-626 | Base Number for MIL-DTL-38999 Series III Hermetic with PCB Tail |

### 2. SELECT A CODED SHELL SIZE:

See chart below 491-499, designates size 9-25 shell size.

### 3. SELECT AN INSERT ARRANGEMENT:

Refer to insert availability chart on page 2-5 and pin-out illustrations on pages 14-28. Please enter the second number which represents the Insert Arrangement number.

| | |
|---|---|
| -35 | Designates Insert Arrangement Number |

### 4. CONTACT TYPE/ALTERNATE KEYING POSITIONS:

Refer to page 46 for alternate rotation letters to use.

| | |
|---|---|
| P | Designates Pin Contacts in Normal Position |
| S | Designates Socket Contacts in Normal Position |

### 5. SELECT A SHELL FINISH:

| | |
|---|---|
| 1 | Hermetic seal, passivated Stainless Steel, 200°C |
| 2 | *Hermetic seal, Stainless Steel w/Nickel Plate |
| 3 | *Carbon Steel w/reflowed tin plate |

### 6. SELECT A TAIL LENGTH:

| | |
|---|---|
| B | .100±.03 |
| D | .200±.03 |
| F | .300±.03 |

| Shell Size | Part Number | B Thread Class 2A 0.1P-0.3L-TS (Plated) | L +.011 –.000 | M +.006 –.005 | GG Dia. +.011 –.010 |
|---|---|---|---|---|---|
| 9 | **10-626**491-XXX | .6250 | .806 | .125 | .973 |
| 11 | 492-XXX | .7500 | .806 | .125 | 1.095 |
| 13 | 493-XXX | .8750 | .806 | .125 | 1.221 |
| 15 | 494-XXX | 1.0000 | .806 | .125 | 1.347 |
| 17 | 495-XXX | 1.1875 | .806 | .125 | 1.434 |
| 19 | 496-XXX | 1.2500 | .806 | .125 | 1.579 |
| 21 | 497-XXX | 1.3750 | .806 | .125 | 1.721 |
| 23 | 498-XXX | 1.5000 | .838 | .156 | 1.886 |
| 25 | 499-XXX | 1.6250 | .838 | .156 | 1.973 |

* Not available for weld mount. All dimensions for reference only.

# Hermetic Box Mounting Receptacle

## Military (D38999/21), Commercial (TVPS02)



**PART NUMBER BUILDER Page 42-46**
**ONLINE CONFIGURATOR www.amphenol-aerospace.com**

**MILITARY**
**D38999/21**

Commercial

**STAINLESS STEEL**
**TVPS02Y**
**TVPS02YN**

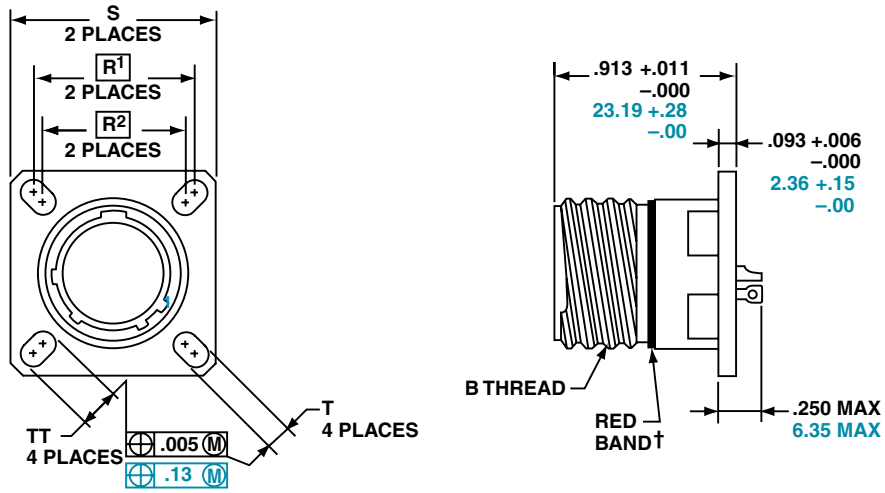


† Red band indicates fully mated

NOTE: Consult Amphenol Aerospace for availability of non-glass-sealed versions with printed circuit tail contacts.

Inches

| Shell Size | MS Shell Size Coded | B Thread 0.1P-0.3L-TS (Plated) | R1 | R2 | S ±.010 | T ±.008 | TT ±.008 |
|---|---|---|---|---|---|---|---|
| 9 | A | .6250 | .719 | .594 | .938 | .128 | .216 |
| 11 | B | .7500 | .812 | .719 | 1.031 | .128 | .194 |
| 13 | C | .8750 | .906 | .812 | 1.125 | .128 | .194 |
| 15 | D | 1.0000 | .969 | .906 | 1.219 | .128 | .173 |
| 17 | E | 1.1875 | 1.062 | .969 | 1.312 | .128 | .194 |
| 19 | F | 1.2500 | 1.156 | 1.062 | 1.438 | .128 | .194 |
| 21 | G | 1.3750 | 1.250 | 1.156 | 1.562 | .128 | .194 |
| 23 | H | 1.5000 | 1.375 | 1.250 | 1.688 | .154 | .242 |
| 25 | J | 1.6250 | 1.500 | 1.375 | 1.812 | .154 | .242 |

Millimeters

| Shell Size | MS Shell Size Coded | R1 | R2 | S ±.25 | T ±.20 | TT ±.20 |
|---|---|---|---|---|---|---|
| 9 | A | 18.26 | 15.09 | 23.83 | 3.25 | 5.49 |
| 11 | B | 20.62 | 18.26 | 26.19 | 3.25 | 4.93 |
| 13 | C | 23.01 | 20.62 | 28.58 | 3.25 | 4.93 |
| 15 | D | 24.61 | 23.01 | 30.96 | 3.25 | 4.39 |
| 17 | E | 26.97 | 24.61 | 33.32 | 3.25 | 4.93 |
| 19 | F | 29.36 | 26.97 | 36.53 | 3.25 | 4.93 |
| 21 | G | 31.75 | 29.36 | 39.67 | 3.25 | 4.93 |
| 23 | H | 34.93 | 31.75 | 42.88 | 3.91 | 6.15 |
| 25 | J | 38.10 | 34.93 | 46.02 | 3.91 | 6.15 |

All dimensions for reference only

☐ Designates true position dimensioning

# Hermetic Jam Nut Receptacle

## Military (D38999/23), Commercial (TVS07)

**PART NUMBER BUILDER Page 42-46**
**ONLINE CONFIGURATOR www.amphenol-aerospace.com**

**MILITARY**
**D38999/23**

Commercial

**STAINLESS STEEL**
**TVS07Y**
**TVS07YN**

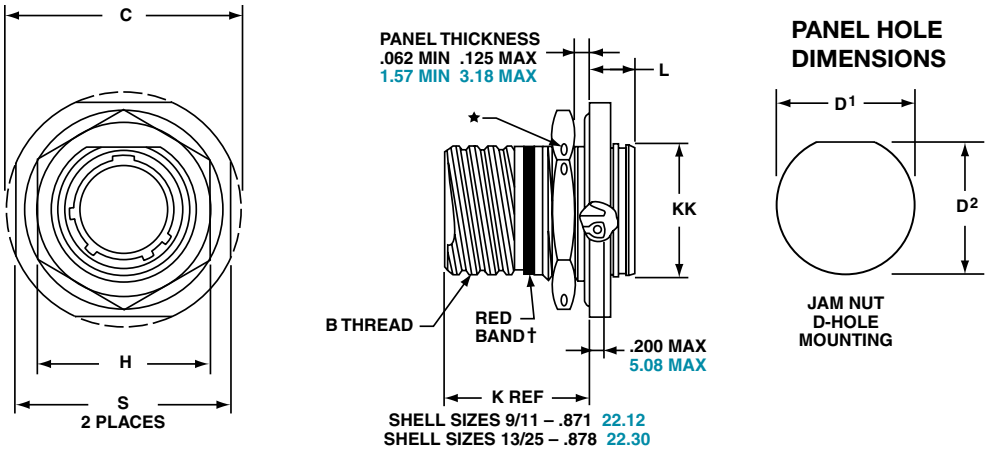


† Red band indicates fully mated
★ .059 dia min.
1.5 dia min. 3 lockwire holes Formed lockwire hole design (6 holes) is optional.

Inches

| Shell Size | MS Shell Size code | B Thread Class 2A 0.1P-0.3L-TS (Plated) | C Max | D[1] +.010 –.000 | D[2] +.000 –.010 | H Hex +.017 –.016 | L Max | S ±.010 | KK +.011 –.000 |
|---|---|---|---|---|---|---|---|---|---|
| 9 | A | .6250 | 1.199 | .693 | .657 | .875 | .357 | 1.062 | .642 |
| 11 | B | .7500 | 1.386 | .825 | .770 | 1.000 | .357 | 1.250 | .766 |
| 13 | C | .8750 | 1.511 | 1.010 | .955 | 1.188 | .357 | 1.375 | .892 |
| 15 | D | 1.0000 | 1.636 | 1.135 | 1.085 | 1.312 | .357 | 1.500 | 1.018 |
| 17 | E | 1.1875 | 1.761 | 1.260 | 1.210 | 1.438 | .357 | 1.625 | 1.142 |
| 19 | F | 1.2500 | 1.949 | 1.385 | 1.335 | 1.562 | .381 | 1.812 | 1.268 |
| 21 | G | 1.3750 | 2.073 | 1.510 | 1.460 | 1.688 | .381 | 1.938 | 1.392 |
| 23 | H | 1.5000 | 2.199 | 1.635 | 1.585 | 1.812 | .381 | 2.062 | 1.518 |
| 25 | J | 1.6250 | 2.323 | 1.760 | 1.710 | 2.000 | .381 | 2.188 | 1.642 |

Millimeters

| Shell Size | MS Shell Size code | C Max | D[1] +.25 –.00 | D[2] +.00 –.25 | H Hex +.43 –.41 | L Max | S ±.25 | KK +.28 –.00 |
|---|---|---|---|---|---|---|---|---|
| 9 | A | 30.45 | 17.60 | 16.70 | 22.23 | 9.07 | 26.97 | 16.31 |
| 11 | B | 35.20 | 20.96 | 19.59 | 25.40 | 9.07 | 31.75 | 19.46 |
| 13 | C | 38.38 | 25.65 | 24.26 | 30.18 | 9.07 | 34.93 | 22.66 |
| 15 | D | 41.55 | 28.83 | 27.56 | 33.32 | 9.07 | 38.10 | 25.86 |
| 17 | E | 44.73 | 32.01 | 30.73 | 36.53 | 9.07 | 41.28 | 29.01 |
| 19 | F | 49.50 | 35.18 | 33.91 | 39.67 | 9.68 | 46.02 | 32.21 |
| 21 | G | 52.65 | 38.35 | 37.08 | 42.80 | 9.68 | 49.23 | 35.36 |
| 23 | H | 55.85 | 41.53 | 40.26 | 46.02 | 9.68 | 52.37 | 38.56 |
| 25 | J | 59.00 | 44.70 | 43.43 | 50.80 | 9.68 | 55.58 | 41.71 |

All dimensions for reference only

# Hermetic Solder Mounting Receptacle

## Military (D38999/25), Commercial (TVSI)

**PART NUMBER BUILDER Page 42-46**
**ONLINE CONFIGURATOR www.amphenol-aerospace.com**

**MILITARY**
**D38999/25**

Commercial

**STAINLESS STEEL**
**TVSIY**
**TVSIYN**

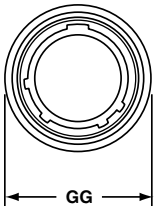


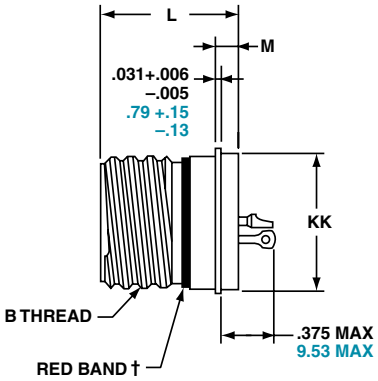


† Red band indicates fully mated

Inches

| Shell Size | MS Shell Size Code | B Thread Class 2A 0.1P-0.3L-TS (Plated) | L +.011 –.005 | M +.006 –.005 | GG Dia. +.011 –.010 | KK Dia +.011 –.005 |
|---|---|---|---|---|---|---|
| 9 | A | .6250 | .806 | .125 | .750 | .672 |
| 11 | B | .7500 | .806 | .125 | .844 | .781 |
| 13 | C | .8750 | .806 | .125 | .969 | .906 |
| 15 | D | 1.0000 | .806 | .125 | 1.094 | 1.031 |
| 17 | E | 1.1875 | .806 | .125 | 1.218 | 1.156 |
| 19 | F | 1.2500 | .806 | .125 | 1.312 | 1.250 |
| 21 | G | 1.3750 | .806 | .125 | 1.438 | 1.375 |
| 23 | H | 1.5000 | .838 | .156 | 1.563 | 1.500 |
| 25 | J | 1.6250 | .838 | .156 | 1.688 | 1.625 |

Millimeters

| Shell Size | MS Shell Size Code | L +.28 –.00 | M +.15 –.13 | GG Dia. +.28 –.25 | KK Dia +.03 –.13 |
|---|---|---|---|---|---|
| 9 | A | 20.47 | 3.18 | 19.05 | 17.07 |
| 11 | B | 20.47 | 3.18 | 21.44 | 19.84 |
| 13 | C | 20.47 | 3.18 | 24.61 | 23.01 |
| 15 | D | 20.47 | 3.18 | 27.79 | 26.19 |
| 17 | E | 20.47 | 3.18 | 30.94 | 29.36 |
| 19 | F | 20.47 | 3.18 | 33.32 | 31.75 |
| 21 | G | 20.47 | 3.18 | 36.53 | 34.93 |
| 23 | H | 21.29 | 3.96 | 39.70 | 38.10 |
| 25 | J | 21.29 | 3.96 | 42.88 | 41.28 |

# Hermetic Wall Mounting Receptacle

## Military (D38999/27), Commercial (TVSHIY)

**PART NUMBER BUILDER Page 42-46**
**ONLINE CONFIGURATOR**
**www.amphenol-aerospace.com**

**MILITARY**
**D38999/27**

Commercial

**STAINLESS STEEL**
**TVSHIY**
**TVSHIYN**

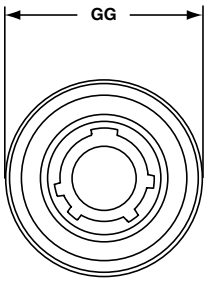


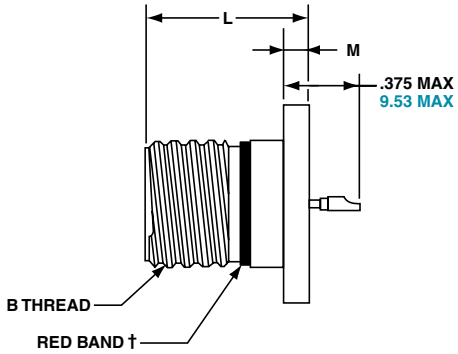


† Red band indicates fully mated

Inches

| Shell Size | MS Shell Size Code | B Thread Class 2A 0.1P-0.3L-TS (Plated) | L +.011 –.000 | M +.006 –.005 | GG Dia. +.011 –.010 |
|---|---|---|---|---|---|
| 9 | A | .6250 | .806 | .125 | .973 |
| 11 | B | .7500 | .806 | .125 | 1.095 |
| 13 | C | .8750 | .806 | .125 | 1.221 |
| 15 | D | 1.0000 | .806 | .125 | 1.347 |
| 17 | E | 1.1875 | .806 | .125 | 1.434 |
| 19 | F | 1.2500 | .806 | .125 | 1.579 |
| 21 | G | 1.3750 | .806 | .125 | 1.721 |
| 23 | H | 1.5000 | .838 | .156 | 1.886 |
| 25 | J | 1.6250 | .838 | .156 | 1.973 |

Millimeters

| Shell Size | MS Shell Size Code | L +.28 –.00 | M +.15 –.13 | GG Dia. +.25 –.00 |
|---|---|---|---|---|
| 9 | A | 20.47 | 3.18 | 24.71 |
| 11 | B | 20.47 | 3.18 | 27.81 |
| 13 | C | 20.47 | 3.18 | 31.01 |
| 15 | D | 20.47 | 3.18 | 34.21 |
| 17 | E | 20.47 | 3.18 | 36.42 |
| 19 | F | 20.47 | 3.18 | 40.11 |
| 21 | G | 20.47 | 3.18 | 43.71 |
| 23 | H | 21.29 | 3.96 | 47.90 |
| 25 | J | 21.29 | 3.96 | 50.11 |

All dimensions for reference only

# Series III, TV Breakaway Fail-Safe Connectors

## Quick-Disconnect with an Axial Pull of Lanyard

Amphenol® Tri-Start Breakaway Fail-Safe Connectors provide unequaled performance in environments requiring instant disengagement.
The "Breakaway" Fail-Safe connector family offers a wide range of electrical and mechanical features:

- Instant decoupling and damage free separation
- Completely intermateable with standard receptacles (D38999/20 and /24)
- Inventory support commonality through the use of standard insert arrangements and contacts

Breakaway unmating is initiated by applying a pull force to the lanyard which causes the operating sleeve on the plug to move away from the receptacle. Coupling segments on the plug then move away from the mating receptacle while expanding, thus releasing the receptacle. After completion of the unmating sequence, spring compression returns the sleeve and segments to their original positions. Unmating of the plug may also be accomplished by normal rotation of the coupling ring without affecting the breakaway capability.

TYPE 2 TYPE 6 TYPE 1

**Amphenol offers a variety of lanyard plug styles including MIL-STD-1760 types 1, 2 and 6 for Stores Management applications.**

The Tri-Start Breakaway Fail-Safe connector exceeds the MIL-Spec Series III requirements for EMI/EMP shielding and features include:

- Solid metal-to-metal coupling
- EMI grounding fingers
- Conductive finishes

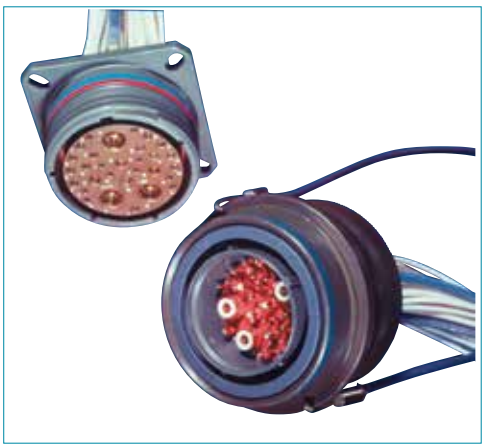

*Breakaway with Coax Contacts*

Amphenol Breakaway Fail-Safe connectors are qualified to MIL-DTL-38999/29, /30 and /31 (for MIL-STD-1760 Stores Management applications). Amphenol also manufactures custom breakaway connectors including those with:

- Highly durable non-metallic operating sleeves in a variety of lengths and diameters
- Increased pull-force capability
- Low-profile designs
- Custom lanyard lengths and backshells
- Low force separation capabilities
- Low insertion/separation force contacts
- Non-cadmium finishes

Contact your local Amphenol representative. Whether you need a standard Breakaway, one of our custom Breakaways, or a unique Breakaway design.

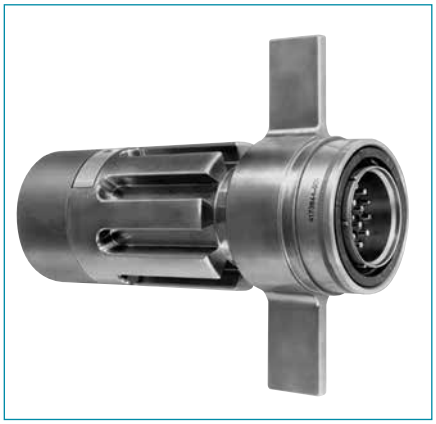

Special configuration Fail-Safe used on space telescope application. Lanyard is replaced by a swivel ring for remote disconnect and "wing arms" have been added for manual actuation accessibility by gloved astronauts.

# TV Breakaway Fail-Safe Lanyard Release Plug

## Military (D38999/29 & D38999/30)

Amphenol Aerospace

## HOW TO ORDER - MILITARY

| 1. DOD Number Prefix | 2. Spec Sheet Number | 3. Service Class | 4. Shell Size | 5. Insert Arrangement | 6. Lanyard Length Code | 7. Alternate Keying Position |
|---|---|---|---|---|---|---|
| D38999/ | 29 | F | E | 35 | P | N |

### 1. DOD NUMBER PREFIX

| | |
|---|---|
| D38999/ | Designates MIL-DTL-38999, Series III, Tri-Start Connector |

### 2. SPECIFICATION SHEET NUMBER

| | |
|---|---|
| 29 | Lanyard Release Plug with pin contacts |
| 30 | Lanyard Release Plug with socket contacts |

### 3. SERVICE CLASS

| | |
|---|---|
| F | Designates electroless nickel plated aluminum, optimum EMI shielding effectiveness –65dB@10 GHz specification min., 48 hour salt spray, 200°C |
| W | Designates corrosion resistant olive drab cadmium plate aluminum, 500 hour extended salt spray, EMI –50dB@10 GHz specification min., 175°C |

### 4. & 5. INSERT AVAILABILITY

| Shell Size- Insert Arrangement | Military Shell Size- Insert Arrangement | Commercial Basic Part# Shell & Insert Arrg. Code | Service Rating | Total Contacts | Contact Size | | | | | | |
|---|---|---|---|---|---|---|---|---|---|---|---|
| | | | | | 22D | 20 | 16 | 12 | 12 Coax | 8 Coax | 8 Twinax |
| 11-2 | N/A | 88/91-556508 | I | 2 | | | 2 | | | | |
| 11-35 | N/A | 06 | M | 13 | 13 | | | | | | |
| 11-98 | N/A | 07 | I | 6 | | 6 | | | | | |
| 13-4 | N/A | 10 | I | 4 | | | 4 | | | | |
| 13-8 | N/A | 11 | I | 8 | | 8 | | | | | |
| 13-35 | N/A | 14 | M | 22 | 22 | | | | | | |
| 13-98 | N/A | 13 | I | 10 | | 10 | | | | | |
| 15-5 | N/A | 18 | II | 5 | | | 5 | | | | |
| 15-15 | N/A | 23 | I | 15 | | 14 | 1 | | | | |
| 15-18 | N/A | 22 | I | 18 | | 18 | | | | | |
| 15-19 | N/A | 19 | I | 19 | | 19 | | | | | |
| 15-35 | N/A | 20 | M | 37 | 37 | | | | | | |
| 15-97 | N/A | 21 | I | 12 | | 8 | 4 | | | | |
| 17-6 | E-6 | 27 | I | 6 | | | | 6 | | | |
| 17-8 | E-8 | 28 | II | 8 | | | 8 | | | | |
| 17-26 | E-26 | 29 | I | 26 | | 26 | | | | | |
| 17-35 | E-35 | 30 | M | 55 | 55 | | | | | | |
| 17-99 | E-99 | 31 | I | 23 | | 21 | 2 | | | | |
| 19-11 | F-11 | 37 | II | 11 | | | 11 | | | | |
| 19-32 | F-32 | 39 | I | 32 | | 32 | | | | | |
| 19-35 | F-35 | 40 | M | 66 | 66 | | | | | | |
| 21-11 | G-11 | 47 | I | 11 | | | | 11 | | | |
| 21-16 | G-16 | 48 | II | 16 | | | 16 | | | | |
| 21-35 | G-35 | 49 | M | 79 | 79 | | | | | | |
| 21-39 | G-39 | 51 | I | 39 | | 37 | 2 | | | | |
| 21-41 | G-41 | 50 | I | 41 | | 41 | | | | | |
| 23-21 | H-21 | 57 | II | 21 | | | 21 | | | | |
| 23-35 | H-35 | 58 | M | 100 | 100 | | | | | | |
| 23-53 | H-53 | 59 | I | 53 | | 53 | | | | | |
| 23-54 | H-54 | 61 | M | 53 | 40 | | 9 | 4 | | | |
| 23-55 | H-55 | 60 | I | 55 | | 55 | | | | | |
| 25-4 | J-4 | 71 | I | 56 | | 48 | 8 | | | | |
| 25-19 | J-19 | 66 | I | 19 | | | | 19 | | | |
| 25-20 | J-20 | 74 | N | 30 | | 10 | 13 | | 4 | | 3 |
| 25-24 | J-24 | 72 | I | 24 | | | 12 | 12 | | | |
| 25-29 | J-29 | 67 | I | 29 | | | 29 | | | | |
| 25-35 | J-35 | 68 | M | 128 | 128 | | | | | | |
| 25-43 | J-43 | 69 | I | 43 | | 23 | 20 | | | | |
| 25-46 | J-46 | 73 | I | 46 | | 40 | 4 | | | 2* | |
| 25-61 | J-61 | 70 | I | 61 | | 61 | | | | | |

# TV Breakaway Fail-Safe Lanyard Release Plug

## Military (D38999/29 & D38999/30)

### 6. MILITARY LANYARD LENGTH CODE

Table II

| Lanyard Length (in.) ± .236 | Lanyard Length (mm) ± 6.0 | Lanyard Length Code For Part Number |
|---|---|---|
| 4.016 | 102 | A |
| 4.528 | 115 | B |
| 5.000 | 127 | C |
| 5.512 | 140 | D |
| 6.024 | 153 | E |
| 6.535 | 166 | F |
| 7.008 | 178 | G |
| 7.520 | 191 | H |
| 7.992 | 203 | I |
| 8.503 | 216 | J |
| 9.016 | 229 | K |
| 9.528 | 242 | L |
| 10.000 | 254 | M |
| 10.512 | 267 | N |
| 11.024 | 280 | P |
| 11.535 | 293 | R |
| 12.008 | 305 | S |
| 12.520 | 318 | T |
| 13.031 | 331 | U |
| 14.016 | 356 | V |
| 15.000 | 381 | W |
| 16.024 | 407 | X |
| 17.008 | 432 | Y |
| 18.031 | 458 | Z |

### 7. MILITARY ALTERNATE KEYING POSITION

For alternate positions of connector (to prevent cross-mating) (N indicates normal).

| Shell Size | Key & Keyway Arrangement Identification Letter | AR° or AP° BSC | BR° or BP° BSC | CR° or CP° BSC | DR° or DP° BSC |
|---|---|---|---|---|---|
| 7, 7H | N* | 120 | 240 | NA | NA |
| | A | 132 | 248 | | |
| | B | 80 | 230 | | |
| | C | 140 | 275 | | |
| | D | 155 | 234 | | |
| | E | 131 | 197 | | |
| 9 | N* | 105 | 140 | 215 | 265 |
| | A | 102 | 132 | 248 | 320 |
| | B | 80 | 118 | 230 | 312 |
| | C | 35 | 140 | 205 | 275 |
| | D | 64 | 155 | 234 | 304 |
| | E | 91 | 131 | 197 | 240 |
| 11, 13, and 15 | N* | 95 | 141 | 208 | 236 |
| | A | 113 | 156 | 182 | 292 |
| | B | 90 | 145 | 195 | 252 |
| | C | 53 | 156 | 220 | 255 |
| | D | 119 | 146 | 176 | 298 |
| | E | 51 | 141 | 184 | 242 |
| 17 and 19 | N* | 80 | 142 | 196 | 293 |
| | A | 135 | 170 | 200 | 310 |
| | B | 49 | 169 | 200 | 244 |
| | C | 66 | 140 | 200 | 257 |
| | D | 62 | 145 | 180 | 280 |
| | E | 79 | 153 | 197 | 272 |
| 21, 23, and 25 | N* | 80 | 142 | 196 | 293 |
| | A | 135 | 170 | 200 | 310 |
| | B | 49 | 169 | 200 | 244 |
| | C | 66 | 140 | 200 | 257 |
| | D | 62 | 145 | 180 | 280 |
| | E | 79 | 153 | 197 | 272 |
| 25L, 33, and 37 | N* | 80 | 142 | 188 | 293 |
| | A | 135 | 170 | 188 | 310 |
| | B | 49 | 169 | 188 | 244 |
| | C | 66 | 140 | 188 | 257 |
| | D | 62 | 145 | 188 | 280 |
| | E | 79 | 153 | 188 | 272 |

**RECEPTACLE (FRONT FACE SHOWN)**

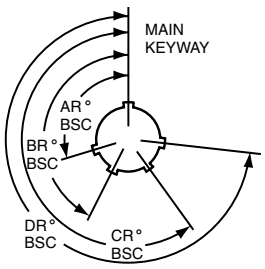


**PLUG (FRONT FACE SHOWN)**

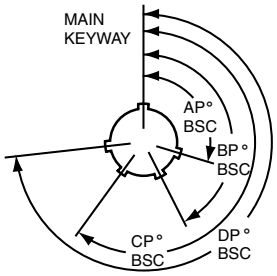

## HOW TO ORDER - COMMERCIAL

Ordering procedure for example part number 88-556529-EP is shown below:

| 1. Service Class | 2. Connector Type Identification | 3. Shell Size & Insert Arrg. Code | 4. Required Field | 5. Lanyard Length Code | 6. Contact Type/Alternate Keying Position |
|---|---|---|---|---|---|
| 88 | -5565 | 29 | 0 | E | P |

### 1. SERVICE CLASS

| | |
|---|---|
| 88 | Designates corrosion resistant olive drab cadmium plate over nickel, 500 hour extended salt spray, EMI –50dB @ 10 GHz specification min., 175°C |
| 91 | Designates electroless nickel plated aluminum, optimum EMI shielding effectiveness –65dB @ 10 GHz specification min., 48 hour salt spray, 200°C |

These are standard finishes. Consult Amphenol Aerospace for other variations.

### 2. CONNECTOR TYPE IDENTIFICATION

| | |
|---|---|
| -5565 | Designates MIL-DTL-38999, Series III Tri-Start Lanyard Release Plug |

### 3. SELECT A COMMERCIAL SHELL SIZE & INSERT ARRANGEMENT CODE

MIL-DTL-38999, see insert availability chart on page 71.

### 4. REQUIRED FIELD

| | |
|---|---|
| 0 | THE REQUIRED FIELD IS ALWAYS A 0 |

### 5. SELECT A LANYARD LENGTH CODE

| Lanyard Length (in.) ± .236 | Lanyard Length (mm) ± 6.0 | Lanyard Length Code For Part Number |
|---|---|---|
| 4.016 | 102 | A |
| 4.528 | 115 | B |
| 5.000 | 127 | C |
| 5.512 | 140 | D |
| 6.024 | 153 | E |
| 6.535 | 166 | F |
| 7.008 | 178 | G |
| 7.520 | 191 | H |
| 7.992 | 203 | I |
| 8.503 | 216 | J |
| 9.016 | 229 | K |
| 9.528 | 242 | L |
| 10.000 | 254 | M |
| 10.512 | 267 | N |
| 11.024 | 280 | P |
| 11.535 | 293 | R |
| 12.008 | 305 | S |
| 12.520 | 318 | T |
| 13.031 | 331 | U |
| 14.016 | 356 | V |
| 15.000 | 381 | W |
| 16.024 | 407 | X |
| 17.008 | 432 | Y |
| 18.031 | 458 | Z |

### 6. SELECT A CONTACT TYPE/ALTERNATE KEYING POSITION

P designates pin, S designates socket for normal positioning of contacts. When an alternate position of the connector is required to prevent cross-mating, a different letter (other than P or S) is used. See alternate positioning on page 72, then convert to Amphenol Commercial coding by the following chart.

| Pin Contacts | | Socket Contacts | |
|---|---|---|---|
| MS Letter | Amphenol letter | MS Letter | Amphenol Letter |
| PN | P (normal) | SN | S (normal) |
| PA | G | SA | H |
| PB | I | SB | J |
| PC | K | SC | L |
| PD | M | SD | N |
| PE | R | SE | T |

# Fail-Safe Lanyard Release Plug-Crimp, Metal

## Military (D38999/29 & D38999/30), Commercial (88-5565 & 91-5565)



PART NUMBER BUILDER Page 71-73
ONLINE CONFIGURATOR www.amphenol-aerospace.com

**MILITARY**
D38999/29 Pin
D38999/30 Socket

Commercial

**STAINLESS STEEL**
88-5565
91-5565

METAL

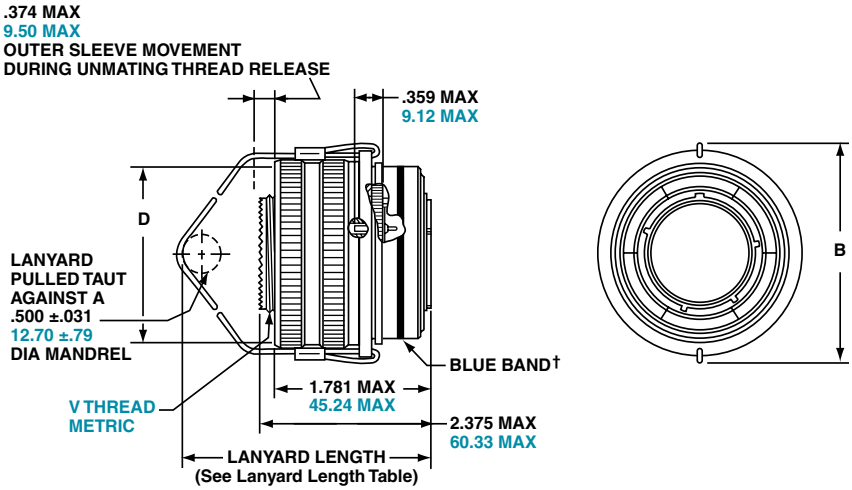


† Blue band indicates rear release contact retention system

Inches

| Shell Size | MS Shell Size Code | B Max | D Max Accessory Dia. |
|---|---|---|---|
| 11 | B | 1.846 | 1.109 |
| 13 | C | 1.972 | 1.250 |
| 15 | D | 2.079 | 1.375 |
| 17 | E | 2.205 | 1.500 |
| 19 | F | 2.301 | 1.625 |
| 21 | G | 2.472 | 1.750 |
| 23 | H | 2.594 | 1.875 |
| 25 | J | 2.705 | 2.000 |

Millimeters

| Shell Size | MS Shell Size Code | B Max | D Max Accessory Dia. | V Thread Metric |
|---|---|---|---|---|
| 11 | B | 46.89 | 28.17 | M15X1.0-6g |
| 13 | C | 50.09 | 31.75 | M18X1.0-6g |
| 15 | D | 52.81 | 34.93 | M22X1.0-6g |
| 17 | E | 56.01 | 38.10 | M25X1.0-6g |
| 19 | F | 58.45 | 41.28 | M28X1.0-6g |
| 21 | G | 62.79 | 44.45 | M31X1.0-6g |
| 23 | H | 65.89 | 47.63 | M34X1.0-6g |
| 25 | J | 68.71 | 50.08 | M37X1.0-6g |

## Applications- Lanyard Release Plug

## HOW TO ORDER - BY MILITARY PART NUMBER FAIL-SAFE D38999/31

Ordering procedure for example part number D38999/31WE20PN1 is shown below:

| 1. DOD Number Prefix | 2. Spec Sheet Number | 3. Service Class | 4. Lanyard Length Code | 5. Insert Arrangement | 6. Contact Style | 7. Alternate Keying Position | 8. Type Number |
|---|---|---|---|---|---|---|---|
| D38999/ | 31 | W | E | 20 | P | N | 1 |

### 1. DOD NUMBER PREFIX

| | |
|---|---|
| D38999/ | MIL-DTL-38999, Series III Tri-Start Connectors |

### 2. SPECIFICATION SHEET NUMBER

| | |
|---|---|
| 31 | Designates Lanyard Release Plug for MIL-STD-1760 with pin contacts |

### 3. SERVICE CLASS

| | |
|---|---|
| F | Electroless nickel plated aluminum, optimum EMI shielding effectiveness –65dB @ 10 GHz specification min., 48 hour salt spray, 200°C |
| W | Corrosion resistant olive drab cadmium plate aluminum, 500 hour extended salt spray, EMI –50dB @ 10 GHz specification min., 175°C |

### 4. LANYARD LENGTH CODE

| Lanyard Length (in.) ±.236 | Lanyard Length (mm.) ± 6.0 | Lanyard Length Code for Part Number |
|---|---|---|
| 6.024 | 153.0 | E |
| 6.535 | 166.0 | F |
| 7.008 | 178.0 | G |
| 7.520 | 191.0 | H |
| 7.992 | 203.0 | I |
| 8.504 | 216.0 | J |
| 9.016 | 229.0 | K |
| 9.528 | 242.0 | L |

### 5. INSERT ARRANGEMENT

| | |
|---|---|
| 11 | 25-11 |
| 20 | 25-20 |

### 6. CONTACT STYLE-P & A ARE VALID OPTIONS

| | |
|---|---|
| P | Replaces the “no designation” option in the PIN on revision C and earlier revision of the Mil-Spec. |
| A | Designates supplied less contacts. |

### 7. ALTERNATE KEYING POSITION

| | |
|---|---|
| N | Is required for normal position. |

### 8. TYPE NUMBER
### TYPE 1, 2 OR 6. SEE DRAWINGS ON PAGE 76.

For accessories for lanyard release plugs see Accessories section.

**MILITARY**
D38999/31

**TYPE 6**
88-555875/76
91-555875/76

**TYPE 2**
88-558518/19
91-558518/19

**TYPE 1-Longer Shell**
T3W-16B25-XXXX

# TV Breakaway Fail-Safe Lanyard Release

## Military (D38999/31) for MIL-STD-1760 Crimp, Metal

PART NUMBER BUILDER
Page 75

**MILITARY**
D38999/31

**TYPE 6**
88-555875/76
91-555875/76

**TYPE 2**
88-558518/19
91-558518/19

**TYPE 1**
T3W-16B25-XXXX

PIN CONTACTS ONLY, SHELL SIZE 25 ONLY

TYPE 6

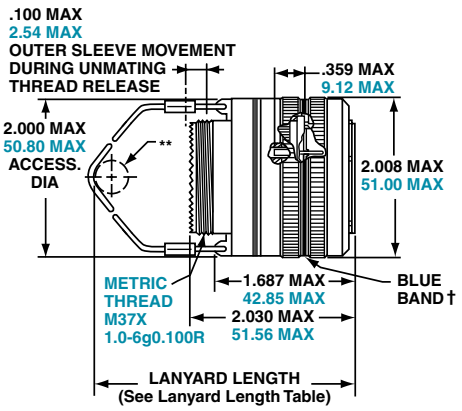


TYPE 2

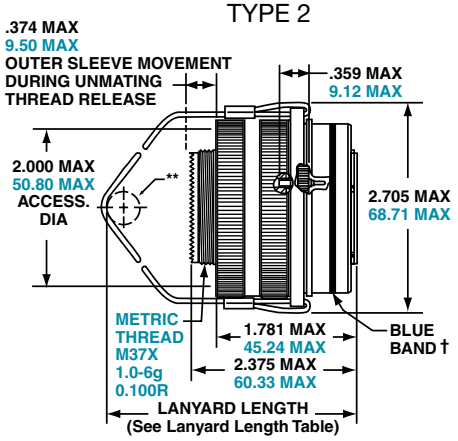


| TRI-START LANYARD SEPARATION FORCES | | |
|---|---|---|
| Shell Size | Straight Plug (lbs. max.) | 15 Degree Pull (lbs. max.) |
| 25 | 90 | 100 |

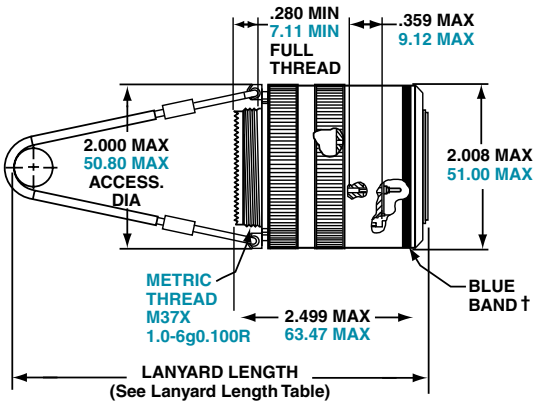


TYPE 1
(LONGER SHELL)

† Blue band indicates rear release contact retention system

** Lanyard pulled taut against a .500 ± .13 dia. Mandrel

All dimensions for reference only

### INSERT AVAILABILITY FAIL SAFE D38999/31 FOR MIL-STD-1760

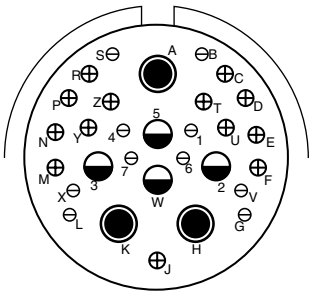


**25-20 PRIMARY INTERFACE SIGNAL SET**

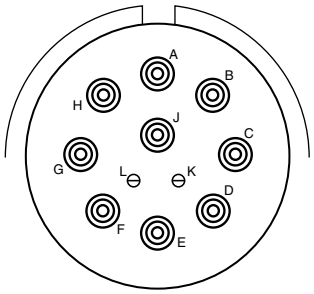


**25-11 AUXILIARY POWER SIGNAL SET**

| PIN CONTACT DATA FOR MIL-STD-1760 | | | | | | |
|---|---|---|---|---|---|---|
| Insert Arrangement | Service Rating | Total Contacts | Contact | | | |
| | | | 20 | 16 | 12 (Coax) | 8 (Twinax) |
| 25-20 | N | 30 | 10 | 13 | 4 | 3 |

| CONTACTS FOR 25-20 PATTERN | | | | | | | |
|---|---|---|---|---|---|---|---|
| Shell Size | Arrg. Number | Number of Contacts | Size Contacts | Service Rating | Contact Location | Standard Contacts | |
| | | | | | | Pin | Socket |
| 25 | -20 | 3 | 8 | Twinax | A, H, K | M39029/90-529 | M39029/91-530 |
| | | 4 | 12 | Coax | 2,3 | M39029/28-211 | M39029/75-416 |
| | | | | | W, 5 | M39029/102-558 | M39029/103-559 |
| | | 13 | 16 | N | C, D, E, F, J, M, N, P, R, T, U, Y, Z | M39029/58-364 | M39029/56-352 |
| | | 10 | 20 | N | B, G, L, S, V, X, 1, 4, 6, 7 | M39029/58-363 | M39029/56-351 |

| Insert Arrangement | Service Rating | Total Contacts | Contact Size | |
|---|---|---|---|---|
| | | | 20 | 10 (power) |
| 25-11 | N | 11 | 2 | 9 |

Contact Legend

8 (twinax) 10 (power) 12 (coax) 16 20

# TV Breakaway Fail-Safe Lanyard Release

## Commercial version of D38999/31, Type 6

Amphenol Aerospace



### QUICK-DISCONNECT WITH AN AXIAL PULL OF LANYARD

Amphenol offers a commercial version of D38999/31 series III, type 6 connectors. Built from the same time-tested and quality components used in its Mil-Spec counterpart, Amphenol's commercial variant is designed to accept a wider variety of insert arrangements the Mil-Spec does not include. Available in shell size 25, these fail-safe connectors adopt an incredible amount of versatility without sacrificing performance or durability. Consult Amphenol Aerospace for more information.

### FEATURES AND BENEFITS

- More versatile than the mil-spec
- 25 lanyards lengths
- Available in all size 25 arrangements
- Low force separation capabilities
- Compatible with all mil-spec backshells and accessories
- Mates to existing D38999 receptacles

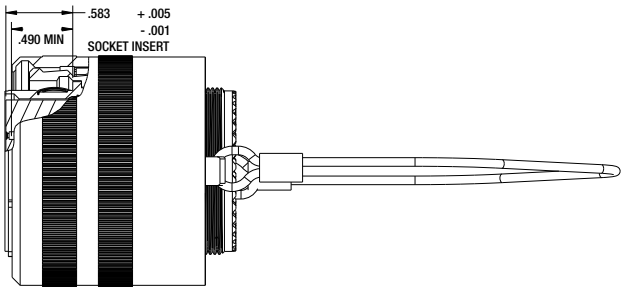


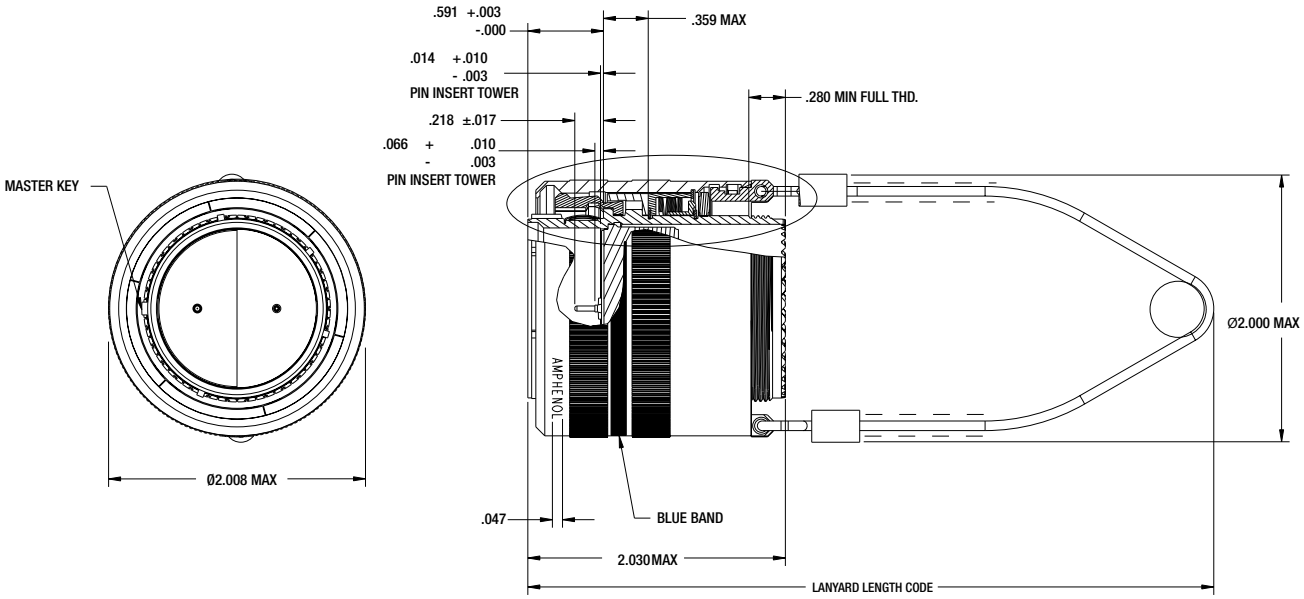

# TV Breakaway Fail-Safe Lanyard Release Connector

## Commercial (88-725010, 88-725014, 88-725041) Version of D38999/31 Type 6

## HOW TO ORDER

| 1. Service Class | 2. Shell Style | 3. Insert Arrg. | 4. Alternate Keying Position (End A) | 5. Lanyard Length Code |
|---|---|---|---|---|
| 88 | 725010- | 04 | P | K |

### 1. FINISH*

| | |
|---|---|
| 88- | Olive Drab Cadmium |
| 91- | Electroless Nickel |

* Contact Amphenol for availability of other finishes.

### 2. SHELL STYLE

| | |
|---|---|
| 725010- | D38999/31 Type 6 |
| 725014- | Extended Backskirt |
| 725041- | Integrated Banding Platform |

### 3. INSERT ARRANGEMENT

| | |
|---|---|
| 04 | 25-4 |
| 07 | 25-7 |
| 11 | 25-11 |
| 17 | 25-17 |
| 20 | 25-20 |
| 24 | 25-24 |
| 26 | 25-26 |
| 29 | 25-29 |
| 35 | 25-35 |
| 37 | 25-37 |
| 41 | 25-41 |
| 43 | 25-43 |
| 46 | 25-46 |
| 61 | 25-61 |
| 62 | 25-62 |
| 90 | 25-90 |
| F4 | 25-F4 |
| 187 | 25-187 |

### 4. KEYING

| Key Position | Pin | Socket |
|---|---|---|
| N | P | S |
| A | G | H |
| B | I | J |
| C | K | L |
| D | M | N |
| E | R | T |

### 5. LANYARD LENGTH CODE

| Lanyard Length (in.) ± .236 | Lanyard Length (mm) ± 6.0 | Lanyard Length Code For Part Number |
|---|---|---|
| 4.016 | 102 | A |
| 4.528 | 115 | B |
| 5.000 | 127 | C |
| 5.512 | 140 | D |
| 6.024 | 153 | E |
| 6.535 | 166 | F |
| 7.008 | 178 | G |
| 7.520 | 191 | H |
| 7.992 | 203 | I |
| 8.503 | 216 | J |
| 9.016 | 229 | K |
| 9.528 | 242 | L |
| 10.000 | 254 | M |
| 10.512 | 267 | N |
| 11.024 | 280 | P |
| 11.535 | 293 | R |
| 12.008 | 305 | S |
| 12.520 | 318 | T |
| 13.031 | 331 | U |
| 14.016 | 356 | V |
| 15.000 | 381 | W |
| 16.024 | 407 | X |
| 17.008 | 432 | Y |
| 18.031 | 458 | Z |

## INSERT ARRANGEMENTS

Shell Size & Insert Arrg. for:

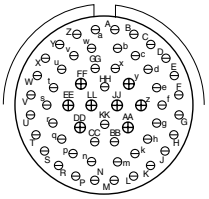
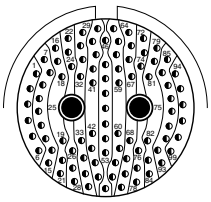
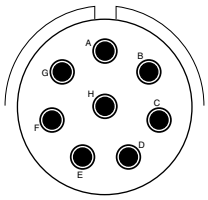
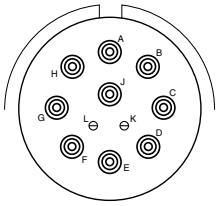

| Series III TV | 25-04 | | 25-07 | | 25-08 | 25-11*** | |
|---|---|---|---|---|---|---|---|
| Service Rating | I | | M | | Twinax | N | |
| Number of Contacts | 48 | 8 | 97 | 2 | 8 | 2 | 9 |
| Contact Size | 20 | 16 | 22D | 8 Twinax | 8 Twinax | 20 | 10 |

Shell Size & Insert Arrg. for:

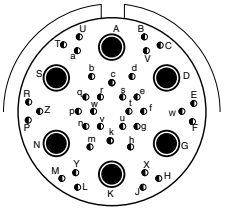
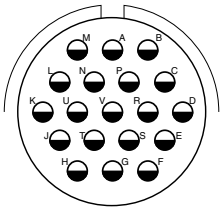
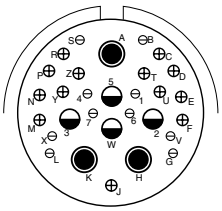
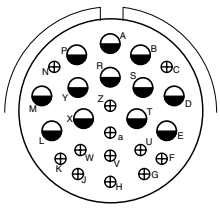

| Series III TV | 25-17 | | 25-19 | 25-20*** | | | | 25-24 | |
|---|---|---|---|---|---|---|---|---|---|
| Service Rating | M | | I | N | | | | I | |
| Number of Contacts | 36 | 6 | 19 | 10 | 13 | 3 | 4 | 12 | 12 |
| Contact Size | 22D | 8 Twinax | 12 | 20 | 16 | 8 Twinax | 12 Coax | 16 | 12 |

# Insert Arrangements

## Commercial (88-725010 & 88-725014) Version of D38999/31 Type 6

Amphenol Aerospace



Shell Size & Insert Arrg. for:

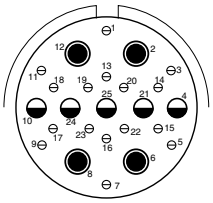
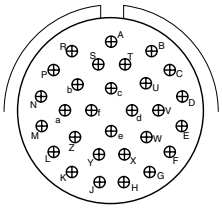
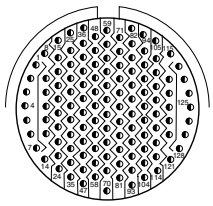
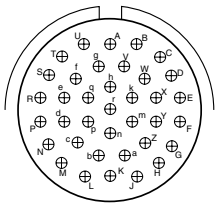

| Series III TV | 25-26 | | | 25-29 | 25-35 | 25-37 |
|---|---|---|---|---|---|---|
| Service Rating | I | | | I | M | I |
| Number of Contacts | 16 | 5 | 4 | 29 | 128 | 37 |
| Contact Size | 20 | 12 | 8 Coax | 16 | 22D | 16 |

Shell Size & Insert Arrg. for:

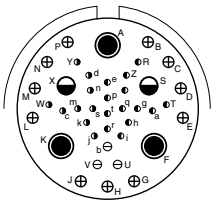
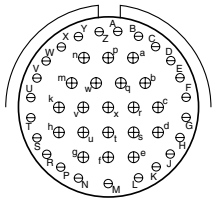
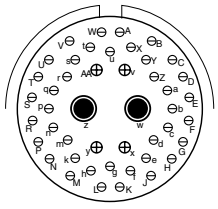
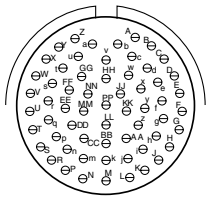

| Series III TV | 25-41 | | | | | 25-43 | | 25-46 | | | 25-61 |
|---|---|---|---|---|---|---|---|---|---|---|---|
| Service Rating | N/Inst. | | | | | I | | I | | | I |
| Number of Contacts | 22 | 3 | 11 | 2 | 3 | 23 | 20 | 40 | 4 | 2 | 61 |
| Contact Size | 22D | 20 | 16 | 12 Coax | 8 Twinax | 20 | 16 | 20 | 16 | 8 Coax † | 20 |

Shell Size & Insert Arrg. for:

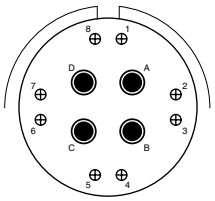
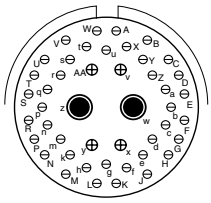
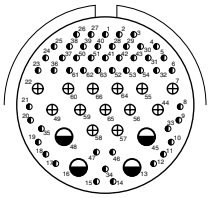
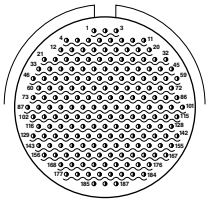

| Series III TV | 25-62 | | 25-90 | | | 25-F4 | | | 25-187 HD |
|---|---|---|---|---|---|---|---|---|---|
| Service Rating | I | | I | | | Size 22D=M, Balance =I | | | N |
| Number of Contacts | 8 | 4 | 40 | 4 | 2 | 49 | 13 | 4 | 187 |
| Contact Size | 16 | 8 | 20 | 16 | 8 Twinax | 22D | 16 | 12 | 23 |
| | Ground Plane Only | | | | | | | | |

## SPECIALS

Shell Size & Insert Arrg. for:

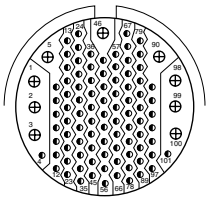
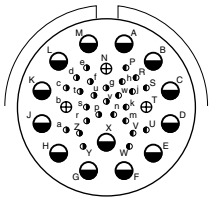
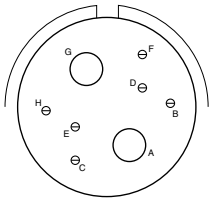
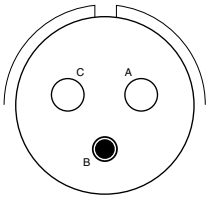
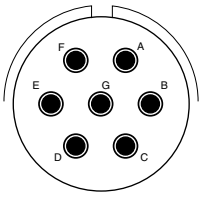

| Series III TV | 25-92 | | 25-97 | | | 25-16 | | 25L-3 | | 25L-7 |
|---|---|---|---|---|---|---|---|---|---|---|
| Service Rating | M | | M | | | M | | II | | II |
| Number of Contacts | 92 | 9 | 26 | 3 | 13 | 6 | 2 | 1 | 2 | 7 |
| Contact Size | 22D | 16 | 22D | 16 | 12 | 20 | 4 | 8 | 4 | 8 |

# TV Breakaway Fail-Safe Lanyard Release Connector

## Commercial (88-725014 & 88-725041) Version of D38999/31 Type 6

### 88-725041 INTEGRATED BANDING PLATFORM

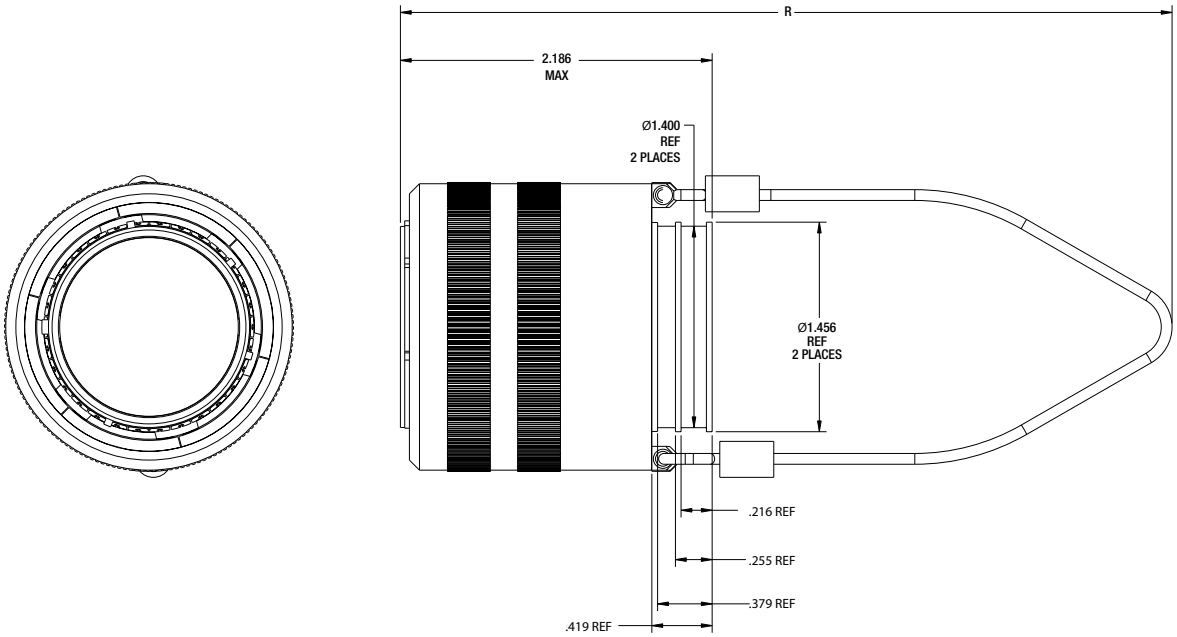


### 88-725014 EXTENDED BACKSKIRT

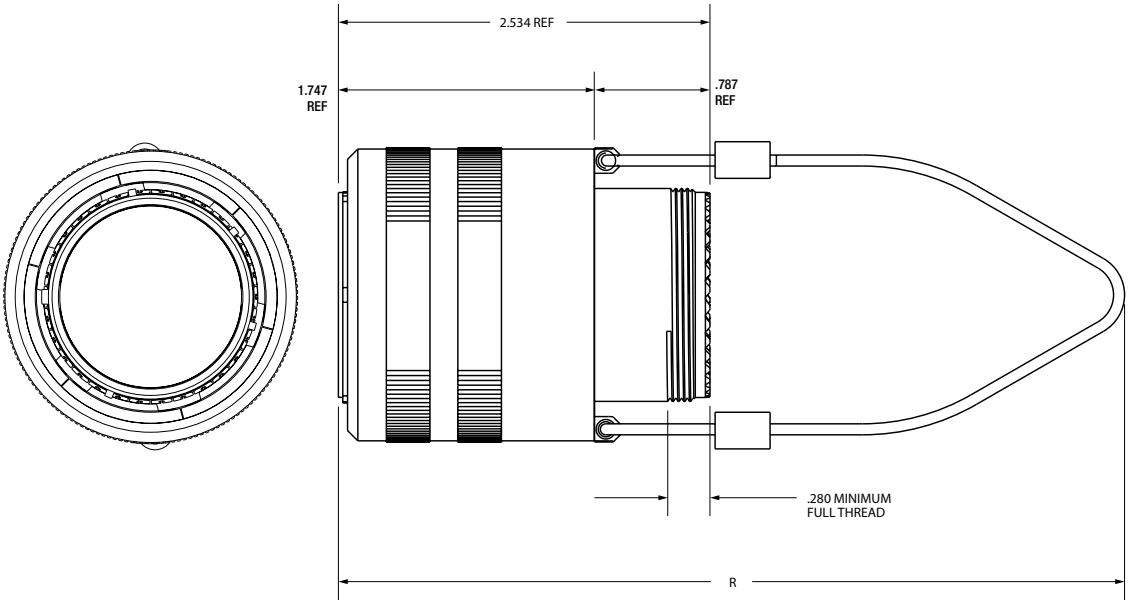

# Lower Profile Lanyard Release Plug, Crimp



## METAL SHELLS WITH COMPOSITE OPERATING SLEEVE

New Hybrid Lanyard Breakaway Fail-Safe connector with a composite thermoplastic outer operating sleeve for greater durability.

This new hybrid breakaway is the breakaway of choice for the Navy F-18 Program. Amphenol's hybrid lanyard design offers greater durability over D38999 aluminum and composite designs because of its ability to handle abuse taken after weapons release.

Other advantages include:

- Lower profile compared to full metal breakaway Fail-Safe connectors
- Less weight

This Hybrid Breakaway meets the applicable requirements of MIL-DTL-38999/31 including random & sine vibration, ice resistance, fluid immersion and hydrolytic stability tests.
(Test reports are available upon request).

Currently the hybrid breakaway is available in shell sizes 25 and 17. It uses standard inserts available for breakaway plugs sizes 25 and 17, and is also available with inserts 25-20 and 25-11 for MIL-STD-1760. These hybrid connectors will accommodate the standard backshells for breakaway connectors shown on Accessories section or the backshell section.

Consult Amphenol Aerospace for ordering of the new hybrid breakaway connectors.

*New Hybrid Lanyard Release Plugs (Metal inside shells and Composite, lower profile outer sleeves)*

| CONDITION/TEST | DESCRIPTION | REFERENCE |
|---|---|---|
| Durability | 400 complete mating/unmating cycles | MIL-DTL-38999/31D |
| High Impact Shock | Nine hammer blows from 1,3 and 5 feet, three each in three axes on mounting panel. | MIL-S- 901D |
| Vibration | 10 to 2000Hz in three perpendicular axes, 4 hours in each axis for a total of 12 hours with no fracturing or breaking of parts. | MIL-STD-202F, Method 204 |
| Ice Resistance | Pull tested after conditioned with Ice water at -18C for 35 minutes. | MIL-DTL-38999/31D |
| Fail Safe Disengagement | Rotationaly unmated 180° from full mate position and pull tested in both a straight direction and at 15°. | MIL-DTL-38999/31D |
| High Speed Pull Separation | 100 cycles at 30 feet per second. | MIL-DTL-38999/31D |

## STORES MANAGEMENT TYPE II, RAIL LAUNCH

**Plugs and Receptacles that meet MIL-STD-1760**

Amphenol provides a Breakaway Rail Launch connector that is designed for use on aircraft that carry rail launch missiles such as AMRAAM.

These connectors are designed for blindmating of stores on rail launch applications. They consist of a buffer plug and a missile receptacle that meet the specifications of MIL-STD-1760 Stores Management.

Other features and benefits include:

- Designed to MIL-C-83538 specifications
- Bayonet and push pull coupling
- Use standard MIL-DTL-38999 crimp termination with power, coax and twinax contacts also available
- Buffer provides flame barrier
- Buffers are replaceable

Consult Amphenol Aerospace for more information and ordering.

*Stores Management Type II Rail Launch Connectors*