DATA SHEET

APD Series: Silicon PIN Diodes, Packaged and Bondable Chips

Applications

- Switches
- Attenuators

Features

- Established Skyworks PIN diode process
- Low capacitance designs to 0.05 pF
- Voltage ratings to 200 V
- Chip size < 15 mils square
- Tight control of I layer base width
- Mesa and planar chip designs

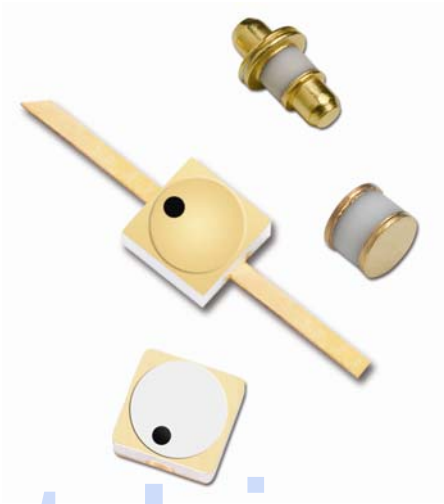

Skyworks Green™ products are compliant with all applicable legislation and are halogen-free. For additional information, refer to *Skyworks Definition of Green™*, document number SQ04-0074.

Datasheet.Live

Description

Skyworks APD series of silicon PIN diodes are designed for use as switch and attenuator devices in high-performance RF and microwave circuits. The PIN diode designs are useful over a wide range of frequencies from below 100 MHz to beyond 30 GHz. These devices use Skyworks well-established silicon technology resulting in PIN diodes with tightly controlled I-region characteristics.

The low capacitance and low resistance of the APD0505 through APD1520 diodes are ideal for switch applications that require insertion loss and fast switching speed. For switch or attenuator applications requiring high power and low distortion, the thick I-region and high reverse breakdown voltage of the APD2220 is ideal.

The absolute maximum ratings of the APD diode series are provided in Table 1. Electrical specifications are provided in Table 2. Table 3 identifies the die part numbers with their corresponding top contact diameters and die outline drawings. Table 4 identifies the hermetic part numbers together with their thermal resistance specifications and hermetic outline drawings. Typical performance characteristics are provided in Figures 1 through 8.

Table 1. APD Series Absolute Maximum Ratings

Parameter	Symbol	Minimum	Typical	Maximum	Units
Power dissipation	P_{DIS}			$\frac{Maximum\ T_J - Case\ Temp}{Thermal\ Resistance_{junction-to-case}}$	W
Reverse voltage	V_R			See Voltage Rating column in Table 2	V
Forward current	I_F			200	mA
Operating temperature	T_{OP}	–65		+175	°C
Storage temperature	T_{STG}	–65		+200	°C

Note: Exposure to maximum rating conditions for extended periods may reduce device reliability. There is no damage to device with only one parameter set at the limit and all other parameters set at or below their nominal value. Exceeding any of the limits listed here may result in permanent damage to the device.

***CAUTION**: Although this device is designed to be as robust as possible, Electrostatic Discharge (ESD) can damage this device. This device must be protected at all times from ESD. Static charges may easily produce potentials of several kilovolts on the human body or equipment, which can discharge without detection. Industry-standard ESD precautions should be used at all times.*

Table 2. APD Series Electrical Specifications (Note 1)
(T_{OP} = +25 °C, Unless Otherwise Noted)

Parameter	Junction Capacitance (C_J) V_R = 50 V, 1 MHz (pF)	Junction Capacitance (C_J) V_R = 0 V, 1 MHz (pF)	Series Resistance (R_S), I = 10 mA, 500 MHz (Ω)	Minority Carrier Lifetime (T_L) I = 10 mA (ns)	Voltage Rating (Note 2) (V)	I-Region Thickness (μm)	Thermal Resistance (θ_{JC}) (°C/W)
	Maximum	Typical	Maximum	Typical		Nominal	Maximum
Switching Applications							
APD0505-000	0.05	0.10	2.5	70	50	5	118
APD0510-000	0.10	0.20	1.5	90	50	5	76
APD0520-000	0.20	0.25	1.0	120	50	5	55
APD0805-000	0.05	0.10	2.0	100	100	8	87
APD0810-000	0.10	0.15	1.5	160	100	8	60
APD1505-000	0.06 @ 10 V	0.12	2.5	350	200	15	60
APD1510-000	0.10	0.20	2.0	300	200	15	56
APD1520-000	0.20	0.25	1.2	900	200	15	44
Attenuator Applications							
APD2220-000	0.20	0.35	4.0	700	100	50	18

Note 1: Performance is guaranteed only under the conditions listed in this Table.

Note 2: Reverse current is specified at 10 μA maximum at the voltage rating noted. Do not exceed this voltage.

Table 3. APD Series Parts

Part Number	Top Contact Diameter (±0.5 mils)	Die Drawing
Switching Applications		
APD0505-000	1.50	150-806
APD0510-000	2.50	150-801
APD0520-000	3.50	150-801
APD0805-000	2.00	150-801
APD0810-000	3.00	150-801
APD1505-000	2.75	150-806
APD1510-000	3.00	150-813
APD1520-000	4.00	150-802
Attenuator Applications		
APD2220-000	8.50	149-815

Table 4. Hermetic Packages

Hermetic Stripline Drawing	Typical Thermal Resistance (θjc) (°C/W)	Hermetic Pill Drawing	Typical Thermal Resistance (θjc) (°C/W)	Hermetic Pill Drawing	Typical Thermal Resistance (θjc) (°C/W)	Hermetic Pill Drawing	Typical Thermal Resistance (θjc) (°C/W)
APD0505-240	214	APD0505-203	232	APD0505-210	133	APD0505-219	201
APD0510-240	170	APD0510-203	189	APD0510-210	90	APD0510-219	158
APD0520-240	148	APD0520-203	167	APD0520-210	59	APD0520-219	136
APD0805-240	182	APD0805-203	201	APD0805-210	107	APD0805-219	170
APD0810-240	155	APD0810-203	174	APD0810-210	75	APD0810-219	143
APD1505-240	150	APD1505-203	172	APD1505-210	74	APD1505-219	142
APD1510-240	149	APD1510-203	168	APD1510-210	70	APD1510-219	137
APD1520-240	136	APD1520-203	155	APD1520-210	57	APD1520-219	124
APD2220-240	115	APD2220-203	132	APD2220-210	32	APD2220-219	104

Typical Performance Characteristics at 25 °C

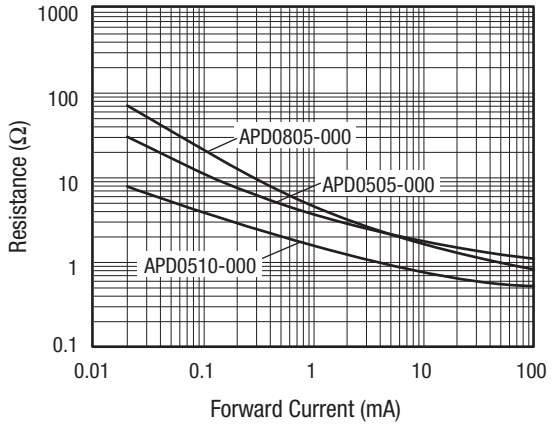

Figure 1. Resistance vs Forward Current @ 1 GHz

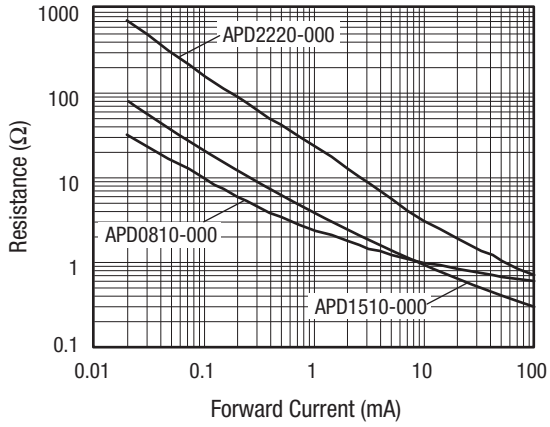

Figure 2. Resistance vs Forward Current @ 1 GHz

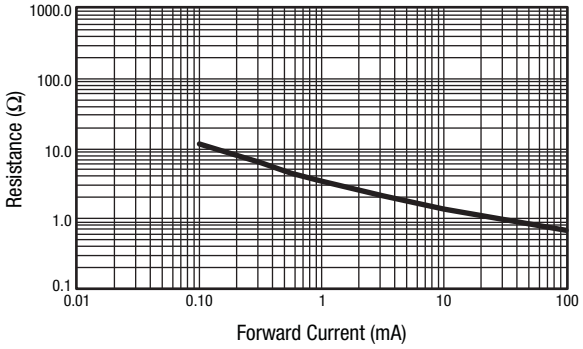

Figure 3. Resistance vs Forward Current @ 500 MHz (APD1505-000 Package)

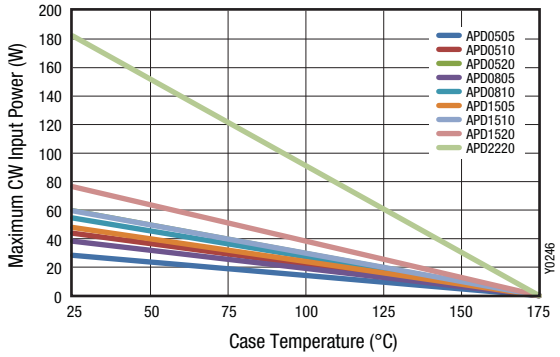

Figure 4. Maximum CW Input Power vs Case Temperature (-000 Package)

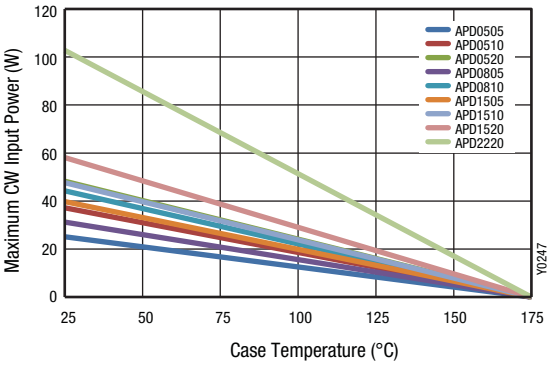

Figure 5. Maximum CW Input Power vs Case Temperature (-210 Package)

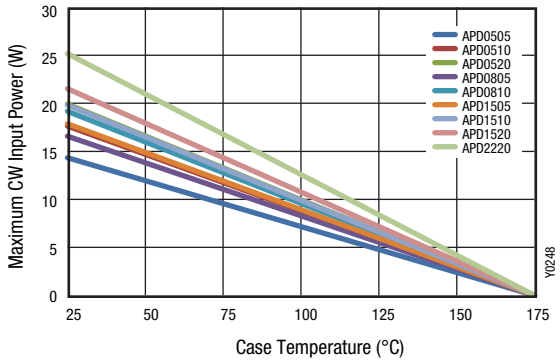

Figure 6. Maximum CW Input Power vs Case Temperature (-203 Package)

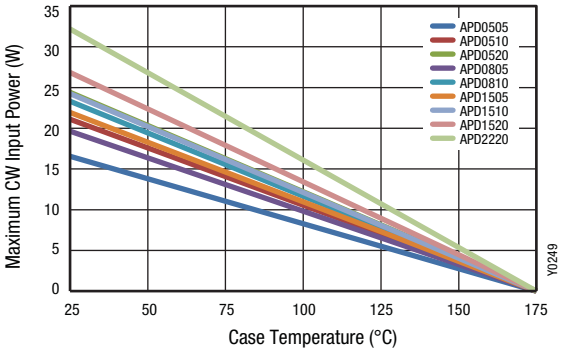

Figure 7. Maximum CW Input Power vs Case Temperature (-219 Package)

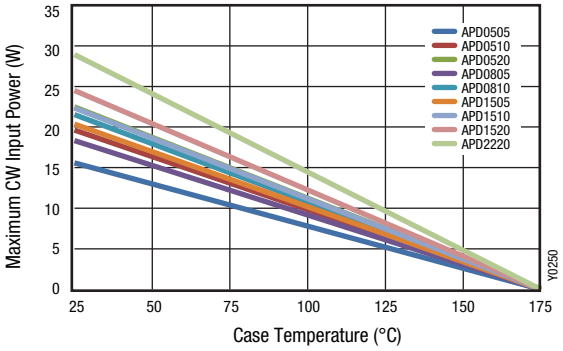

Figure 8. Maximum CW Input Power vs Case Temperature (-240 Package)

Package Outline Drawings

Package outline die drawings for the APD diode series are shown in Figures 9 and 10. Hermetic package outlines are shown in Figures 11 through 14.

Die Packages

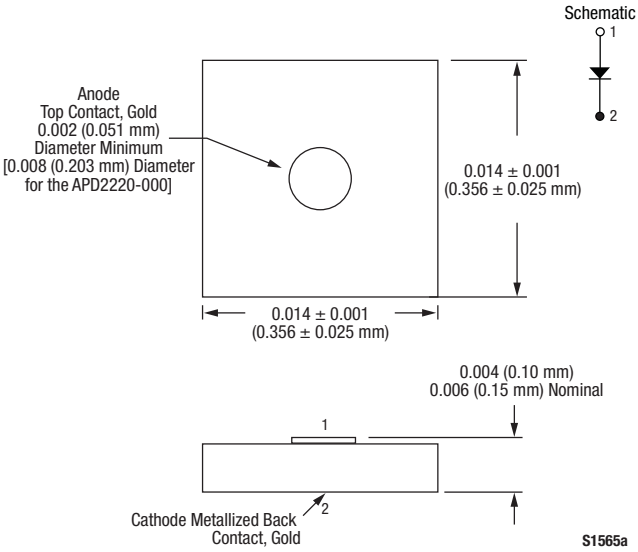

Figure 9. 149-815 Package

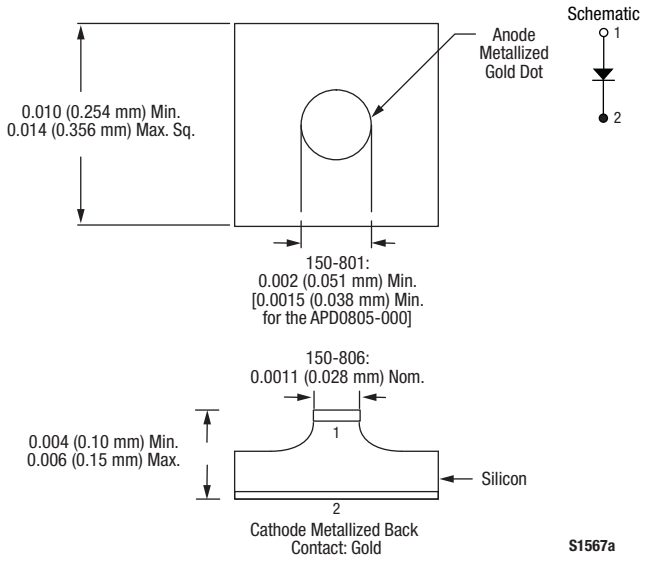

Figure 10. 150 Series Package

Hermetic Packages

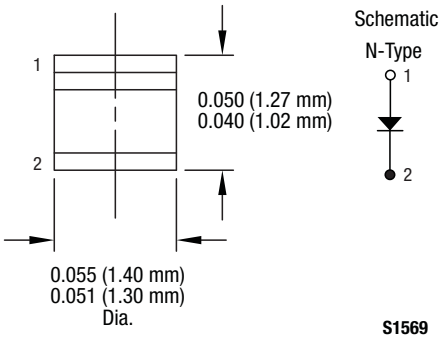

Figure 11. -203 Package

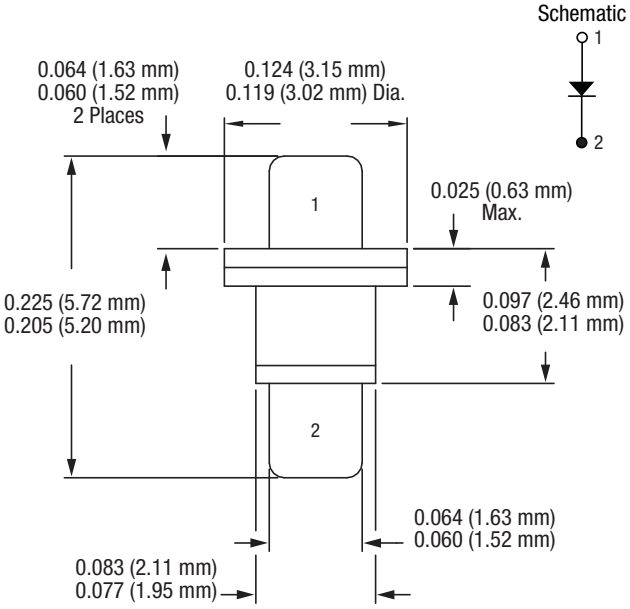

Figure 12. -210 Package

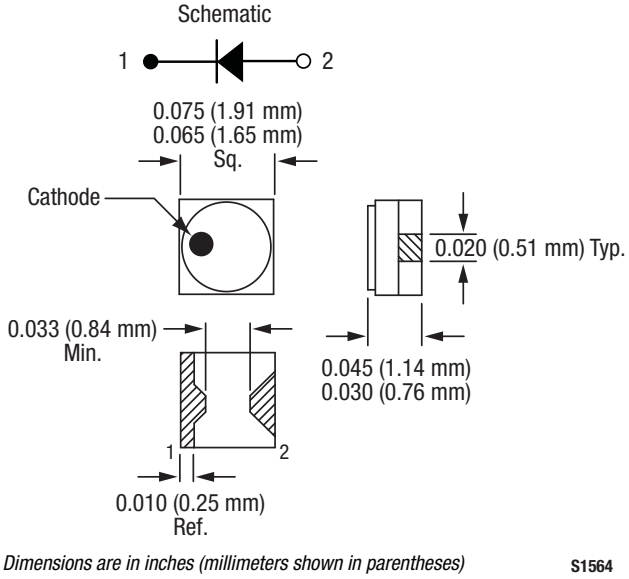

Figure 13. -219 Package

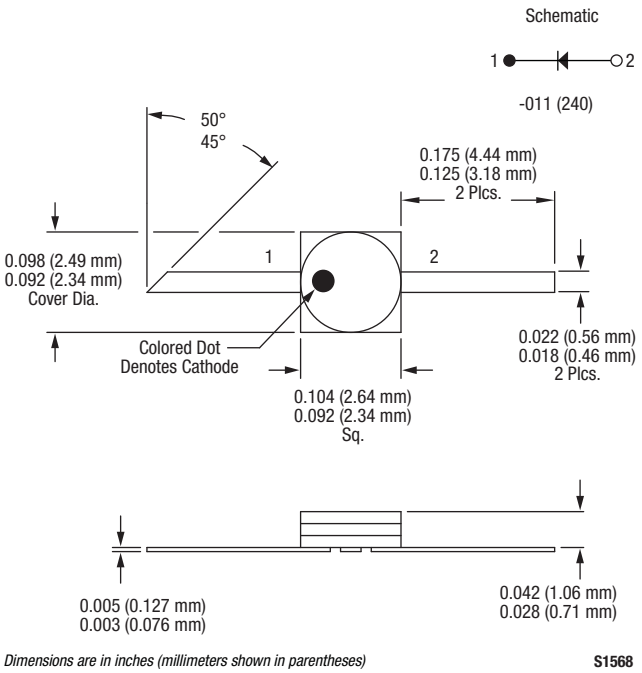

Figure 14. -240 Package

Copyright © 2002-2010, 2012-2013 Skyworks Solutions, Inc. All Rights Reserved.

Information in this document is provided in connection with Skyworks Solutions, Inc. (“Skyworks”) products or services. These materials, including the information contained herein, are provided by Skyworks as a service to its customers and may be used for informational purposes only by the customer. Skyworks assumes no responsibility for errors or omissions in these materials or the information contained herein. Skyworks may change its documentation, products, services, specifications or product descriptions at any time, without notice. Skyworks makes no commitment to update the materials or information and shall have no responsibility whatsoever for conflicts, incompatibilities, or other difficulties arising from any future changes.

No license, whether express, implied, by estoppel or otherwise, is granted to any intellectual property rights by this document. Skyworks assumes no liability for any materials, products or information provided hereunder, including the sale, distribution, reproduction or use of Skyworks products, information or materials, except as may be provided in Skyworks Terms and Conditions of Sale.

THE MATERIALS, PRODUCTS AND INFORMATION ARE PROVIDED “AS IS” WITHOUT WARRANTY OF ANY KIND, WHETHER EXPRESS, IMPLIED, STATUTORY, OR OTHERWISE, INCLUDING FITNESS FOR A PARTICULAR PURPOSE OR USE, MERCHANTABILITY, PERFORMANCE, QUALITY OR NON-INFRINGEMENT OF ANY INTELLECTUAL PROPERTY RIGHT; ALL SUCH WARRANTIES ARE HEREBY EXPRESSLY DISCLAIMED. SKYWORKS DOES NOT WARRANT THE ACCURACY OR COMPLETENESS OF THE INFORMATION, TEXT, GRAPHICS OR OTHER ITEMS CONTAINED WITHIN THESE MATERIALS. SKYWORKS SHALL NOT BE LIABLE FOR ANY DAMAGES, INCLUDING BUT NOT LIMITED TO ANY SPECIAL, INDIRECT, INCIDENTAL, STATUTORY, OR CONSEQUENTIAL DAMAGES, INCLUDING WITHOUT LIMITATION, LOST REVENUES OR LOST PROFITS THAT MAY RESULT FROM THE USE OF THE MATERIALS OR INFORMATION, WHETHER OR NOT THE RECIPIENT OF MATERIALS HAS BEEN ADVISED OF THE POSSIBILITY OF SUCH DAMAGE.

Skyworks products are not intended for use in medical, lifesaving or life-sustaining applications, or other equipment in which the failure of the Skyworks products could lead to personal injury, death, physical or environmental damage. Skyworks customers using or selling Skyworks products for use in such applications do so at their own risk and agree to fully indemnify Skyworks for any damages resulting from such improper use or sale.

Customers are responsible for their products and applications using Skyworks products, which may deviate from published specifications as a result of design defects, errors, or operation of products outside of published parameters or design specifications. Customers should include design and operating safeguards to minimize these and other risks. Skyworks assumes no liability for applications assistance, customer product design, or damage to any equipment resulting from the use of Skyworks products outside of stated published specifications or parameters.

Skyworks, the Skyworks symbol, and “Breakthrough Simplicity” are trademarks or registered trademarks of Skyworks Solutions, Inc., in the United States and other countries. Third-party brands and names are for identification purposes only, and are the property of their respective owners. Additional information, including relevant terms and conditions, posted at www.skyworksinc.com, are incorporated by reference.