TIP41C

NPN PLANAR TRANSISTOR

NPN EXPITAXIAL PLANAR TRANSISTOR

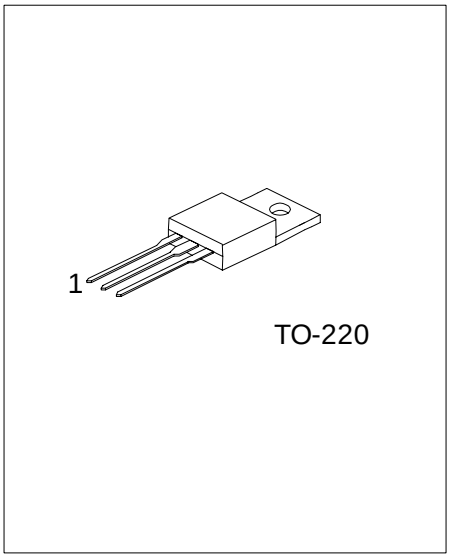

*Pb-free plating product number:TIP41CL

■ DESCRIPTION

The UTC TIP41C is a NPN expitaxial planar transistor, designed for using in general purpose amplifier and switching applications.

■ FEATURE

* Complement to TIP42C

■ ORDERING INFORMATION

Order Number		Package	Pin Assignment			Packing
Normal	Lead Free Plating		1	2	3	
TIP41C-TA3-T	TIP41CL-TA3-T	TO-220	B	C	E	Tube

TIP41CL-TA3-T

(1)Packing Type
(2)Package Type
(3)Lead Plating

(1) T: Tube
(2) TA3: TO-220
(3) L: Lead Free Plating, Blank: Pb/Sn

Datasheet.Live

Copyright © 2005 Unisonic Technologies Co., Ltd

■ ABSOLUTE MAXIMUM RATINGS

PARAMETER		SYMBOL	RATING	UNIT
Collector Base Voltage		V_{CBO}	100	V
Collector to Emitter Voltage		V_{CEO}	100	V
Emitter-Base Voltage		V_{EBO}	5	V
Collector Current	DC	I_C	6	A
	Pulse		10	A
Base Current		I_B	2	A
Collector Dissipation	Tc=25°C	P_C	65	W
	Ta=25°C		2	W
Junction Temperature		T_J	150	°C
Storage Temperature		T_{STG}	-65 ~ +150	°C

Note: Absolute maximum ratings are those values beyond which the device could be permanently damaged. Absolute maximum ratings are stress ratings only and functional device operation is not implied.

■ ELECTRICAL CHARACTERISTICS (Tc=25°C)

PARAMETER	SYMBOL	TEST CONDITIONS	MIN	TYP	MAX	UNIT
Collector Emitter Sustaining Voltage (Note)	V_{CEO}	I_C=30mA, I_B=0	100			V
Collector Cutoff Current	I_{CEO}	V_{CE}=60V, I_B=0			0.7	mA
Collector Cutoff Current	I_{CES}	V_{CE}=100V, V_{EB}=0			400	μA
Emitter Cutoff Current	I_{EBO}	V_{BE}=5V, Ic=0			1	mA
Collector-Emitter Saturation Voltage (Note)	$V_{CE(SAT)}$	I_C=6A, I_B=600mA			1.5	V
Base-Emitter On Voltage (Note)	$V_{BE(ON)}$	I_C=6A, V_{CE}=4V			2.0	V
DC Current Gain (Note)	h_{FE1}	I_C=300mA, V_{CE}=4V	30			
	h_{FE2}	I_C=3A, V_{CE}=4V	15		75	
Current Gain Bandwidth Product	f_T	V_{CE}=10V, Ic=500mA, f=1MHz	3			MHz

Note: Pulse Test: PW≦300μs, Duty Cycle≦2%

■ TYPICAL CHARACTERISTICS

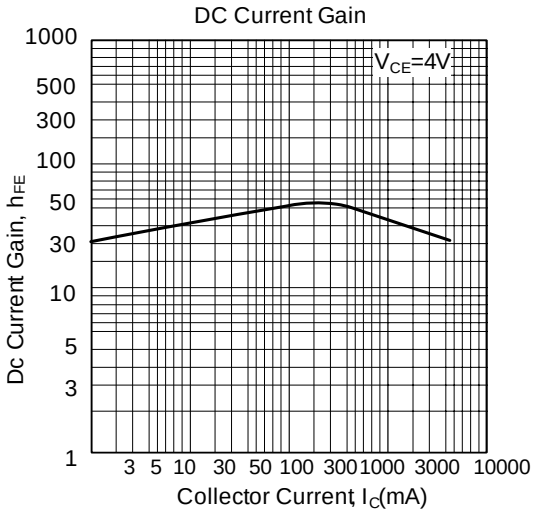

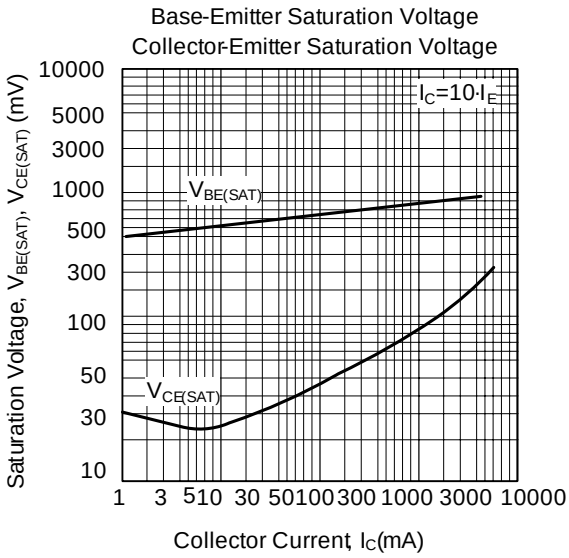

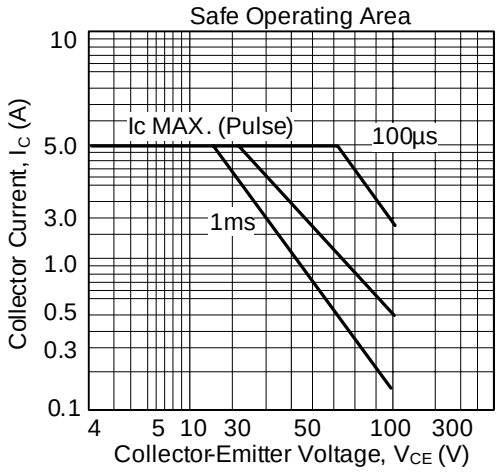

UTC assumes no responsibility for equipment failures that result from using products at values that exceed, even momentarily, rated values (such as maximum ratings, operating condition ranges, or other parameters) listed in products specifications of any and all UTC products described or contained herein. UTC products are not designed for use in life support appliances, devices or systems where malfunction of these products can be reasonably expected to result in personal injury. Reproduction in whole or in part is prohibited without the prior written consent of the copyright owner. The information presented in this document does not form part of any quotation or contract, is believed to be accurate and reliable and may be changed without notice.