- **AC Types Feature 1.5-V to 5.5-V Operation and Balanced Noise Immunity at 30% of the Supply**
- **Speed of Bipolar F, AS, and S, With Significantly Reduced Power Consumption**
- **Balanced Propagation Delays**
- **±24-mA Output Drive Current**
  - **Fanout to 15 F Devices**
- **SCR-Latchup-Resistant CMOS Process and Circuit Design**
- **Exceeds 2-kV ESD Protection Per MIL-STD-883, Method 3015**

CD54AC74 . . . F PACKAGE
CD74AC74 . . . E OR M PACKAGE
(TOP VIEW)

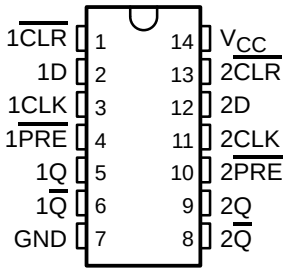

description/ordering information

The ’AC74 dual positive-edge-triggered devices are D-type flip-flops.

A low level at the preset ($\overline{PRE}$) or clear ($\overline{CLR}$) inputs sets or resets the outputs, regardless of the levels of the other inputs. When $\overline{PRE}$ and $\overline{CLR}$ are inactive (high), data at the data (D) input meeting the setup time requirements is transferred to the outputs on the positive-going edge of the clock pulse. Clock triggering occurs at a voltage level and is not related directly to the rise time of the clock pulse. Following the hold-time interval, data at the D input can be changed without affecting the levels at the outputs.

ORDERING INFORMATION

T_A	PACKAGE†		ORDERABLE PART NUMBER	TOP-SIDE MARKING
–55°C to 125°C	PDIP – E	Tube	CD74AC74E	CD74AC74E
	SOIC – M	Tube	CD74AC74M	AC74M
		Tape and reel	CD74AC74M96	
	CDIP – F	Tube	CD54AC74F3A	CD54AC74F3A

† Package drawings, standard packing quantities, thermal data, symbolization, and PCB design guidelines are available at www.ti.com/sc/package.

FUNCTION TABLE
(each flip-flop)

INPUTS				OUTPUTS	
$\overline{PRE}$	$\overline{CLR}$	CLK	D	Q	$\overline{Q}$
L	H	X	X	H	L
H	L	X	X	L	H
L	L	X	X	H‡	H‡
H	H	↑	H	H	L
H	H	↑	L	L	H
H	H	L	X	Q_0	$\overline{Q}_0$

‡ This configuration is nonstable; that is, it does not persist when $\overline{PRE}$ or $\overline{CLR}$ returns to its inactive (high) level.

logic diagram, each flip-flop (positive logic)

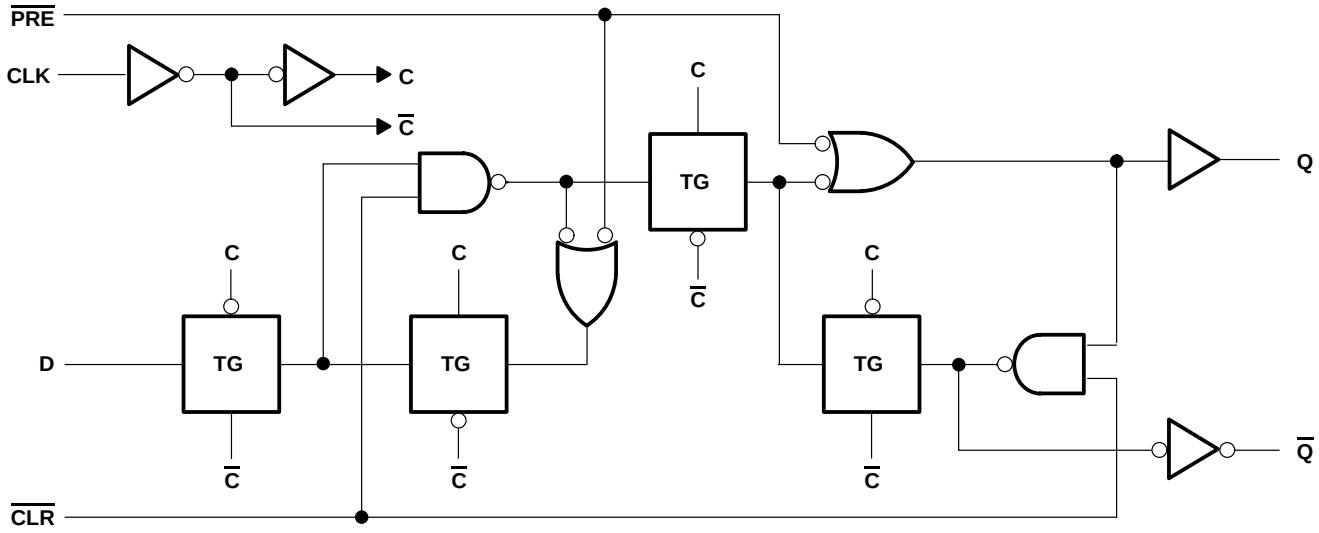

absolute maximum ratings over operating free-air temperature range (unless otherwise noted)†

Supply voltage range, V_{CC}	–0.5 V to 6 V
Input clamp current, I_{IK} ($V_I < 0$ or $V_I > V_{CC}$) (see Note 1)	±20 mA
Output clamp current, I_{OK} ($V_O < 0$ or $V_O > V_{CC}$) (see Note 1)	±50 mA
Continuous output current, I_O ($V_O = 0$ to V_{CC})	±50 mA
Continuous current through V_{CC} or GND	±100 mA
Package thermal impedance, θ_{JA} (see Note 2): E package	80°C/W
M package	86°C/W
Storage temperature range, T_{stg}	–65°C to 150°C

† Stresses beyond those listed under “absolute maximum ratings” may cause permanent damage to the device. These are stress ratings only, and functional operation of the device at these or any other conditions beyond those indicated under “recommended operating conditions” is not implied. Exposure to absolute-maximum-rated conditions for extended periods may affect device reliability.

NOTES: 1. The input and output voltage ratings may be exceeded if the input and output current ratings are observed.
2. The package thermal impedance is calculated in accordance with JESD 51-7.

recommended operating conditions (see Note 3)

			T_A = 25°C		–55°C to 125°C		–40°C to 85°C		UNIT
			MIN	MAX	MIN	MAX	MIN	MAX	
V_{CC}	Supply voltage		1.5	5.5	1.5	5.5	1.5	5.5	V
V_{IH}	High-level input voltage	V_{CC} = 1.5 V	1.2		1.2		1.2		V
		V_{CC} = 3 V	2.1		2.1		2.1		
		V_{CC} = 5.5 V	3.85		3.85		3.85		
V_{IL}	Low-level input voltage	V_{CC} = 1.5 V		0.3		0.3		0.3	V
		V_{CC} = 3 V		0.9		0.9		0.9	
		V_{CC} = 5.5 V		1.65		1.65		1.65	
V_I	Input voltage		0	V_{CC}	0	V_{CC}	0	V_{CC}	V
V_O	Output voltage		0	V_{CC}	0	V_{CC}	0	V_{CC}	V
I_{OH}	High-level output current	V_{CC} = 4.5 V to 5.5 V		–24		–24		–24	mA
I_{OL}	Low-level output current	V_{CC} = 4.5 V to 5.5 V		24		24		24	mA
$\Delta t/\Delta v$	Input transition rise or fall rate	V_{CC} = 1.5 V to 3 V		50		50		50	ns/V
		V_{CC} = 3.6 V to 5.5 V		20		20		20	

NOTE 3: All unused inputs of the device must be held at V_{CC} or GND to ensure proper device operation. Refer to the TI application report, *Implications of Slow or Floating CMOS Inputs*, literature number SCBA004.

electrical characteristics over recommended operating free-air temperature range (unless otherwise noted)

PARAMETER	TEST CONDITIONS		V_{CC}	T_A = 25°C		–55°C to 125°C		–40°C to 85°C		UNIT
				MIN	MAX	MIN	MAX	MIN	MAX	
V_{OH}	$V_I = V_{IH}$ or V_{IL}	I_{OH} = –50 µA	1.5 V	1.4		1.4		1.4		V
			3 V	2.9		2.9		2.9		
			4.5 V	4.4		4.4		4.4		
		I_{OH} = –4 mA	3 V	2.58		2.4		2.48		
		I_{OH} = –24 mA	4.5 V	3.94		3.7		3.8		
		I_{OH} = –50 mA†	5.5 V			3.85				
		I_{OH} = –75 mA†	5.5 V					3.85		
V_{OL}	$V_I = V_{IH}$ or V_{IL}	I_{OL} = 50 µA	1.5 V		0.1		0.1		0.1	V
			3 V		0.1		0.1		0.1	
			4.5 V		0.1		0.1		0.1	
		I_{OL} = 12 mA	3 V		0.36		0.5		0.44	
		I_{OL} = 24 mA	4.5 V		0.36		0.5		0.44	
		I_{OL} = 50 mA†	5.5 V				1.65			
		I_{OL} = 75 mA†	5.5 V						1.65	
I_I	$V_I = V_{CC}$ or GND		5.5 V		±0.1		±1		±1	µA
I_{CC}	$V_I = V_{CC}$ or GND,	I_O = 0	5.5 V		4		80		40	µA
C_i					10		10		10	pF

† Test one output at a time, not exceeding 1-second duration. Measurement is made by forcing indicated current and measuring voltage to minimize power dissipation. Test verifies a minimum 50-Ω transmission-line drive capability at 85°C and 75-Ω transmission-line drive capability at 125°C.

timing requirements over recommended operating free-air temperature range, V_{CC} = 1.5 V (unless otherwise noted)

			–55°C to 125°C		–40°C to 85°C		UNIT
			MIN	MAX	MIN	MAX	
f_{clock}	Clock frequency			9		10	MHz
t_w	Pulse duration	$\overline{PRE}$ or $\overline{CLR}$ low	50		44		ns
		CLK	56		49		
t_{su}	Setup time	Data	44		39		ns
		$\overline{PRE}$ or $\overline{CLR}$ inactive					ns
t_h	Hold time	Data after CLK↑	0		0		ns
t_{rec}	Recovery time, before CLK↑	$\overline{CLR}$↑ or $\overline{PRE}$↑	34		30		ns

timing requirements over recommended operating free-air temperature range, V_{CC} = 3.3 V ± 0.3 V (unless otherwise noted) (see Figure 1)

			–55°C to 125°C		–40°C to 85°C		UNIT
			MIN	MAX	MIN	MAX	
f_{clock}	Clock frequency			79		90	MHz
t_w	Pulse duration	$\overline{PRE}$ or $\overline{CLR}$ low	5.6		4.9		ns
		CLK	6.3		5.5		
t_{su}	Setup time	Data	4.9		4.3		ns
		$\overline{PRE}$ or $\overline{CLR}$ inactive					ns
t_h	Hold time	Data after CLK↑	0		0		ns
t_{rec}	Recovery time, before CLK↑	$\overline{CLR}$↑ or $\overline{PRE}$↑	4.7		4.1		ns

timing requirements over recommended operating free-air temperature range, V_{CC} = 5 V ± 0.5 V (unless otherwise noted) (see Figure 1)

			–55°C to 125°C		–40°C to 85°C		UNIT
			MIN	MAX	MIN	MAX	
f_{clock}	Clock frequency			110		125	MHz
t_w	Pulse duration	$\overline{PRE}$ or $\overline{CLR}$ low	4		3.5		ns
		CLK	4.5		3.9		
t_{su}	Setup time	Data	3.5		3.1		ns
		$\overline{PRE}$ or $\overline{CLR}$ inactive					ns
t_h	Hold time	Data after CLK↑	0		0		ns
t_{rec}	Recovery time, before CLK↑	$\overline{CLR}$↑ or $\overline{PRE}$↑	2.7		2.4		ns

switching characteristics over recommended operating free-air temperature range, V_{CC} = 1.5 V, C_L = 50 pF (unless otherwise noted) (see Figure 1)

PARAMETER	FROM (INPUT)	TO (OUTPUT)	–55°C to 125°C		–40°C to 85°C		UNIT
			MIN	MAX	MIN	MAX	
f_{max}			9		10		MHz
t_{PLH}	CLK	Q or $\overline{Q}$		125		114	ns
t_{PHL}				125		114	
t_{PLH}	$\overline{PRE}$ or $\overline{CLR}$	Q or $\overline{Q}$		132		120	ns
t_{PHL}				144		131	

switching characteristics over recommended operating free-air temperature range, V_{CC} = 3.3 V ± 0.3 V (unless otherwise noted) (see Figure 1)

PARAMETER	FROM (INPUT)	TO (OUTPUT)	–55°C to 125°C		–40°C to 85°C		UNIT
			MIN	MAX	MIN	MAX	
f_{max}			79		90		MHz
t_{PLH}	CLK	Q or $\overline{Q}$	3.5	14	3.6	12.7	ns
t_{PHL}			3.5	14	3.6	12.7	
t_{PLH}	$\overline{PRE}$ or $\overline{CLR}$	Q or $\overline{Q}$	3.7	14.7	3.8	13.4	ns
t_{PHL}			4	16.1	4.1	14.6	

switching characteristics over recommended operating free-air temperature range, V_{CC} = 5 V ± 0.5 V (unless otherwise noted) (see Figure 1)

PARAMETER	FROM (INPUT)	TO (OUTPUT)	–55°C to 125°C		–40°C to 85°C		UNIT
			MIN	MAX	MIN	MAX	
f_{max}			110		125		MHz
t_{PLH}	CLK	Q or $\overline{Q}$	2.5	10	2.6	9.1	ns
t_{PHL}			2.5	10	2.6	9.1	
t_{PLH}	$\overline{PRE}$ or $\overline{CLR}$	Q or $\overline{Q}$	2.6	10.5	2.7	9.5	ns
t_{PHL}			2.9	11.5	3	10.4	

operating characteristics, T_A = 25°C

PARAMETER		TYP	UNIT
C_{pd}	Power dissipation capacitance	55	pF

PARAMETER MEASUREMENT INFORMATION

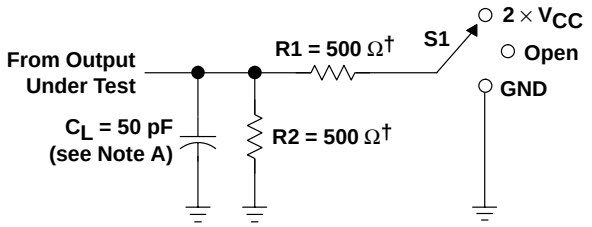

† When V_{CC} = 1.5 V, R1 = R2 = 1 kΩ

LOAD CIRCUIT

TEST	S1
t_{PLH}/t_{PHL} t_{PLZ}/t_{PZL} t_{PHZ}/t_{PZH}	Open $2 \times V_{CC}$ GND

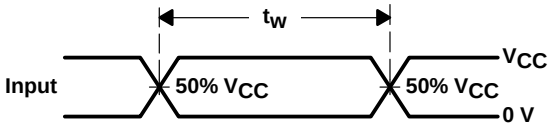

VOLTAGE WAVEFORMS
PULSE DURATION

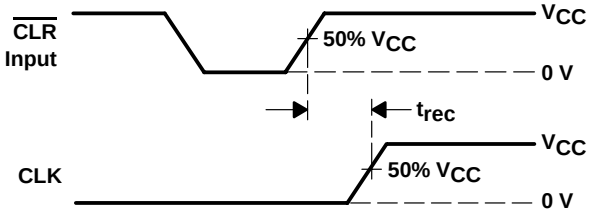

VOLTAGE WAVEFORMS
RECOVERY TIME

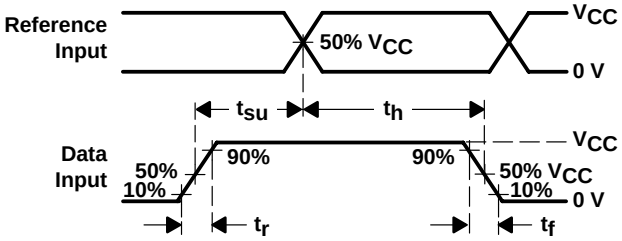

VOLTAGE WAVEFORMS
SETUP AND HOLD AND INPUT RISE AND FALL TIMES

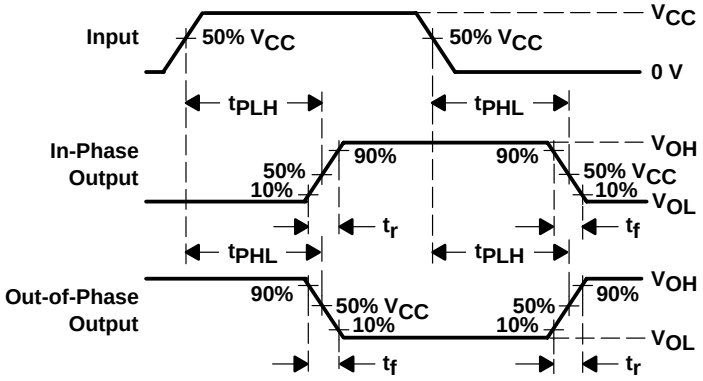

VOLTAGE WAVEFORMS
PROPAGATION DELAY AND OUTPUT TRANSITION TIMES

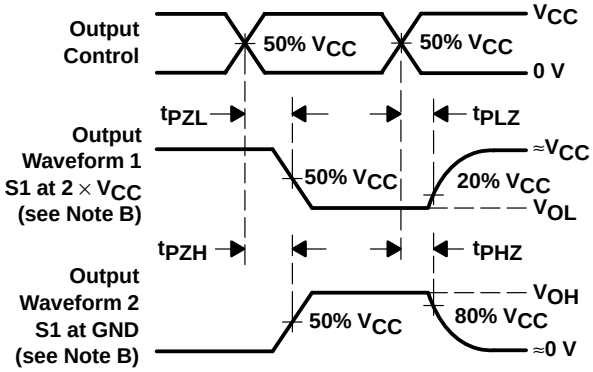

VOLTAGE WAVEFORMS
OUTPUT ENABLE AND DISABLE TIMES

NOTES:
A. C_L includes probe and test-fixture capacitance.
B. Waveform 1 is for an output with internal conditions such that the output is low except when disabled by the output control. Waveform 2 is for an output with internal conditions such that the output is high except when disabled by the output control.
C. All input pulses are supplied by generators having the following characteristics: PRR ≤ 1 MHz, Z_O = 50 Ω, t_r = 3 ns, t_f = 3 ns. Phase relationships between waveforms are arbitrary.
D. For clock inputs, f_{max} is measured with the input duty cycle at 50%.
E. The outputs are measured one at a time with one input transition per measurement.
F. t_{PLH} and t_{PHL} are the same as t_{pd}.
G. t_{PZL} and t_{PZH} are the same as t_{en}.
H. t_{PLZ} and t_{PHZ} are the same as t_{dis}.

Figure 1. Load Circuit and Voltage Waveforms

PACKAGING INFORMATION

Orderable Device	Status [1]	Package Type	Package Drawing	Pins	Package Qty	Eco Plan [2]	Lead/Ball Finish	MSL Peak Temp [3]
CD54AC74F3A	ACTIVE	CDIP	J	14	1	TBD	Call TI	N / A for Pkg Type
CD74AC74E	ACTIVE	PDIP	N	14	25	Pb-Free (RoHS)	CU NIPDAU	N / A for Pkg Type
CD74AC74EE4	ACTIVE	PDIP	N	14	25	Pb-Free (RoHS)	CU NIPDAU	N / A for Pkg Type
CD74AC74M	ACTIVE	SOIC	D	14	50	Green (RoHS & no Sb/Br)	CU NIPDAU	Level-1-260C-UNLIM
CD74AC74M96	ACTIVE	SOIC	D	14	2500	Green (RoHS & no Sb/Br)	CU NIPDAU	Level-1-260C-UNLIM
CD74AC74M96E4	ACTIVE	SOIC	D	14	2500	Green (RoHS & no Sb/Br)	CU NIPDAU	Level-1-260C-UNLIM
CD74AC74ME4	ACTIVE	SOIC	D	14	50	Green (RoHS & no Sb/Br)	CU NIPDAU	Level-1-260C-UNLIM

[1] The marketing status values are defined as follows:
ACTIVE: Product device recommended for new designs.
LIFEBUY: TI has announced that the device will be discontinued, and a lifetime-buy period is in effect.
NRND: Not recommended for new designs. Device is in production to support existing customers, but TI does not recommend using this part in a new design.
PREVIEW: Device has been announced but is not in production. Samples may or may not be available.
OBSOLETE: TI has discontinued the production of the device.

[2] Eco Plan - The planned eco-friendly classification: Pb-Free (RoHS), Pb-Free (RoHS Exempt), or Green (RoHS & no Sb/Br) - please check http://www.ti.com/productcontent for the latest availability information and additional product content details.
TBD: The Pb-Free/Green conversion plan has not been defined.
Pb-Free (RoHS): TI's terms "Lead-Free" or "Pb-Free" mean semiconductor products that are compatible with the current RoHS requirements for all 6 substances, including the requirement that lead not exceed 0.1% by weight in homogeneous materials. Where designed to be soldered at high temperatures, TI Pb-Free products are suitable for use in specified lead-free processes.
Pb-Free (RoHS Exempt): This component has a RoHS exemption for either 1) lead-based flip-chip solder bumps used between the die and package, or 2) lead-based die adhesive used between the die and leadframe. The component is otherwise considered Pb-Free (RoHS compatible) as defined above.
Green (RoHS & no Sb/Br): TI defines "Green" to mean Pb-Free (RoHS compatible), and free of Bromine (Br) and Antimony (Sb) based flame retardants (Br or Sb do not exceed 0.1% by weight in homogeneous material)

[3] MSL, Peak Temp. -- The Moisture Sensitivity Level rating according to the JEDEC industry standard classifications, and peak solder temperature.

J (R–GDIP–T**) CERAMIC DUAL IN–LINE PACKAGE

14 LEADS SHOWN

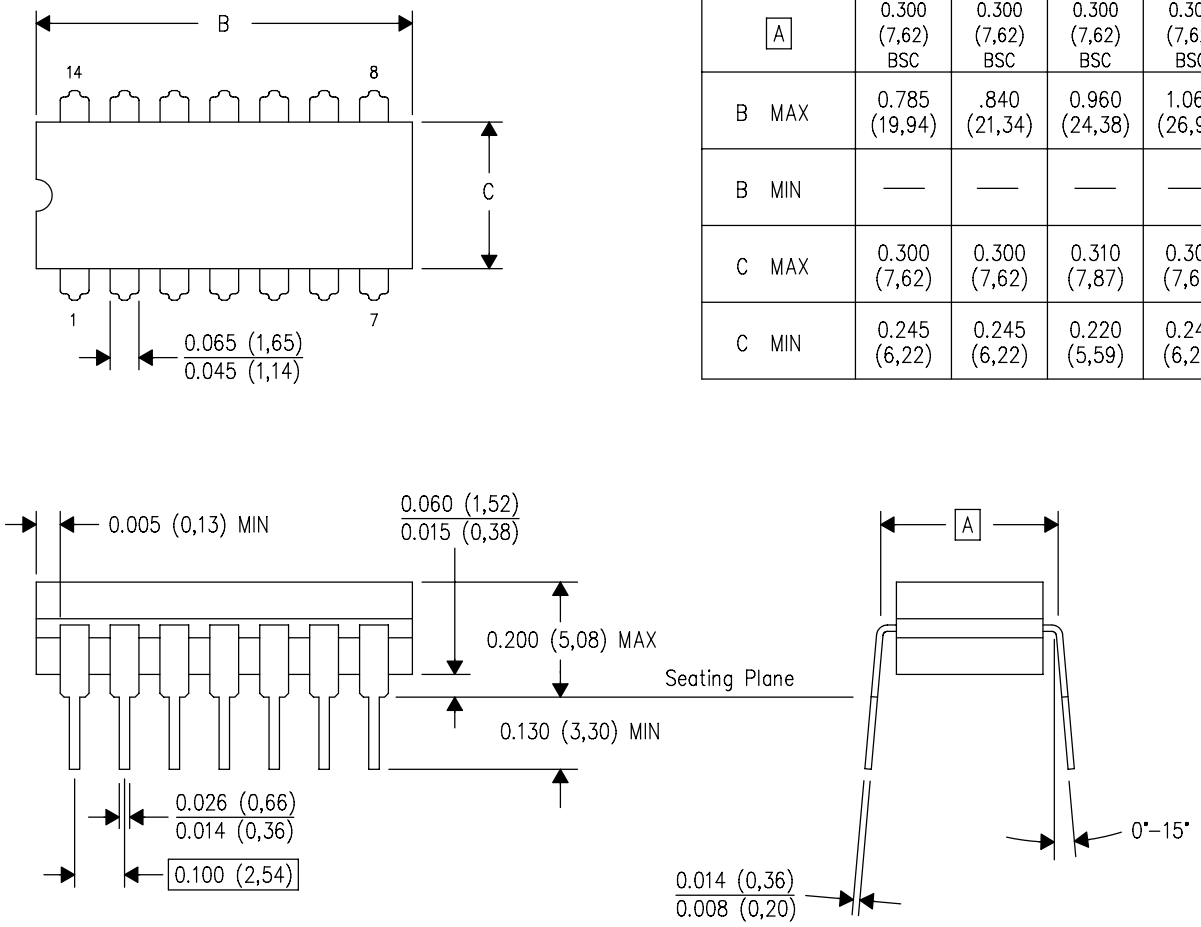

DIM \ PINS **	14	16	18	20
A	0.300 (7,62) BSC	0.300 (7,62) BSC	0.300 (7,62) BSC	0.300 (7,62) BSC
B MAX	0.785 (19,94)	.840 (21,34)	0.960 (24,38)	1.060 (26,92)
B MIN	—	—	—	—
C MAX	0.300 (7,62)	0.300 (7,62)	0.310 (7,87)	0.300 (7,62)
C MIN	0.245 (6,22)	0.245 (6,22)	0.220 (5,59)	0.245 (6,22)

4040083/F 03/03

NOTES:
- A. All linear dimensions are in inches (millimeters).
- B. This drawing is subject to change without notice.
- C. This package is hermetically sealed with a ceramic lid using glass frit.
- D. Index point is provided on cap for terminal identification only on press ceramic glass frit seal only.
- E. Falls within MIL STD 1835 GDIP1–T14, GDIP1–T16, GDIP1–T18 and GDIP1–T20.

N (R–PDIP–T**) PLASTIC DUAL–IN–LINE PACKAGE

16 PINS SHOWN

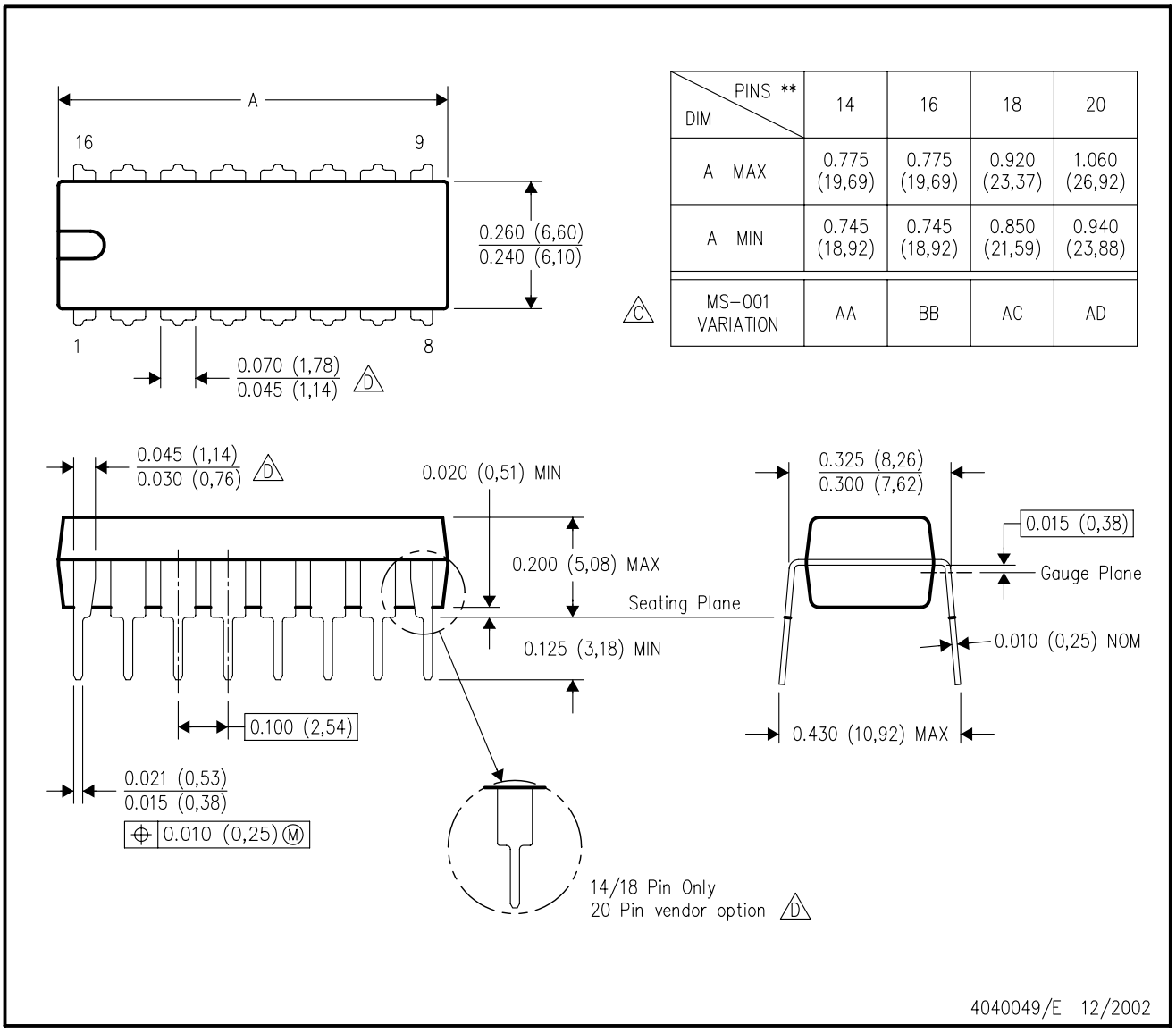

DIM \ PINS **	14	16	18	20
A MAX	0.775 (19,69)	0.775 (19,69)	0.920 (23,37)	1.060 (26,92)
A MIN	0.745 (18,92)	0.745 (18,92)	0.850 (21,59)	0.940 (23,88)
MS–001 VARIATION (C)	AA	BB	AC	AD

NOTES:
A. All linear dimensions are in inches (millimeters).
B. This drawing is subject to change without notice.
C. Falls within JEDEC MS–001, except 18 and 20 pin minimum body length (Dim A).
D. The 20 pin end lead shoulder width is a vendor option, either half or full width.

D (R–PDSO–G14) PLASTIC SMALL–OUTLINE PACKAGE

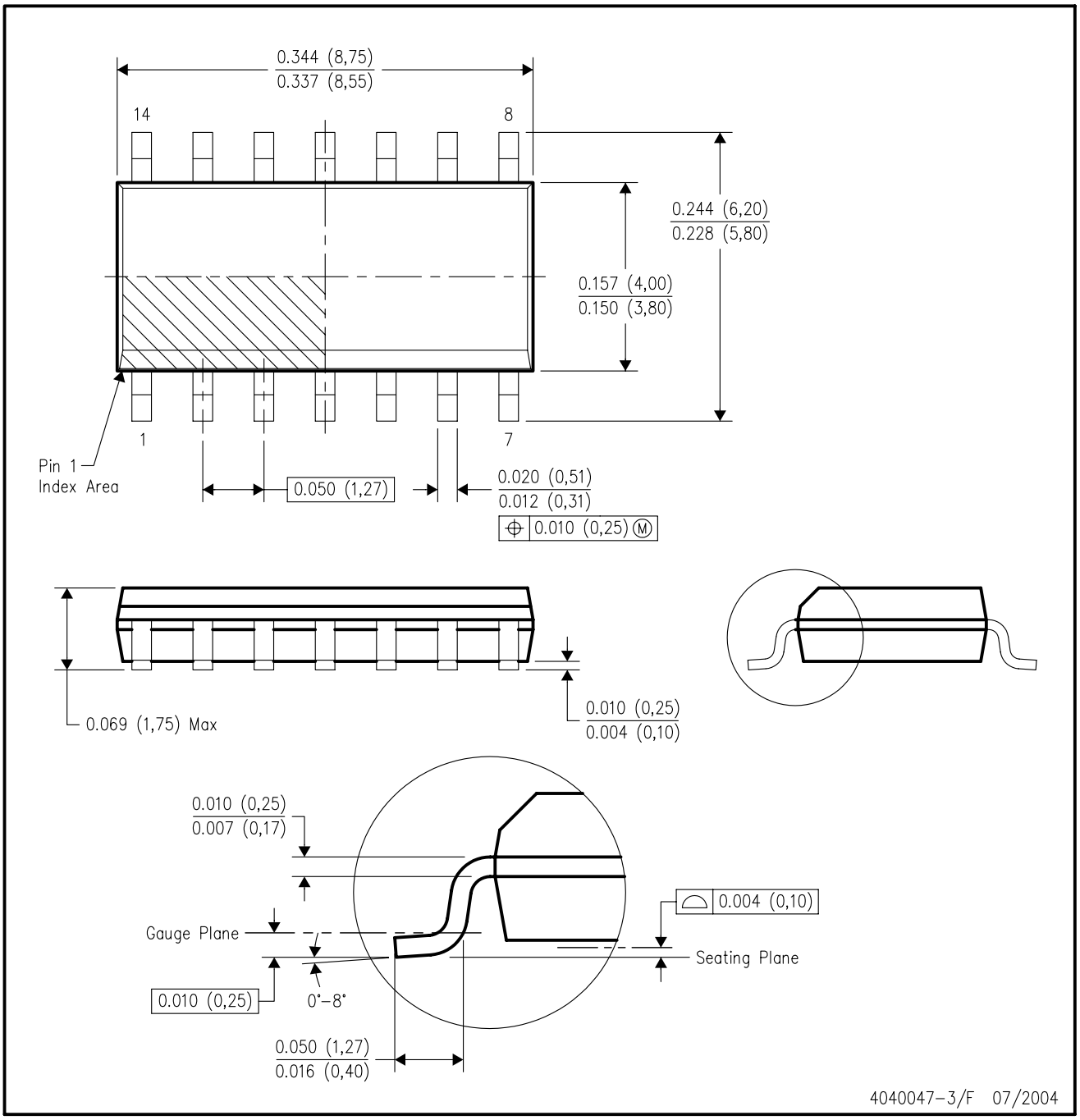

NOTES:
A. All linear dimensions are in inches (millimeters).
B. This drawing is subject to change without notice.
C. Body dimensions do not include mold flash or protrusion not to exceed 0.006 (0,15).
D. Falls within JEDEC MS–012 variation AB.

IMPORTANT NOTICE

Texas Instruments Incorporated and its subsidiaries (TI) reserve the right to make corrections, modifications, enhancements, improvements, and other changes to its products and services at any time and to discontinue any product or service without notice. Customers should obtain the latest relevant information before placing orders and should verify that such information is current and complete. All products are sold subject to TI's terms and conditions of sale supplied at the time of order acknowledgment.

TI warrants performance of its hardware products to the specifications applicable at the time of sale in accordance with TI's standard warranty. Testing and other quality control techniques are used to the extent TI deems necessary to support this warranty. Except where mandated by government requirements, testing of all parameters of each product is not necessarily performed.

TI assumes no liability for applications assistance or customer product design. Customers are responsible for their products and applications using TI components. To minimize the risks associated with customer products and applications, customers should provide adequate design and operating safeguards.

TI does not warrant or represent that any license, either express or implied, is granted under any TI patent right, copyright, mask work right, or other TI intellectual property right relating to any combination, machine, or process in which TI products or services are used. Information published by TI regarding third-party products or services does not constitute a license from TI to use such products or services or a warranty or endorsement thereof. Use of such information may require a license from a third party under the patents or other intellectual property of the third party, or a license from TI under the patents or other intellectual property of TI.

Reproduction of information in TI data books or data sheets is permissible only if reproduction is without alteration and is accompanied by all associated warranties, conditions, limitations, and notices. Reproduction of this information with alteration is an unfair and deceptive business practice. TI is not responsible or liable for such altered documentation.

Resale of TI products or services with statements different from or beyond the parameters stated by TI for that product or service voids all express and any implied warranties for the associated TI product or service and is an unfair and deceptive business practice. TI is not responsible or liable for any such statements.

Following are URLs where you can obtain information on other Texas Instruments products and application solutions:

Products		**Applications**	
Amplifiers	amplifier.ti.com	Audio	www.ti.com/audio
Data Converters	dataconverter.ti.com	Automotive	www.ti.com/automotive
DSP	dsp.ti.com	Broadband	www.ti.com/broadband
Interface	interface.ti.com	Digital Control	www.ti.com/digitalcontrol
Logic	logic.ti.com	Military	www.ti.com/military
Power Mgmt	power.ti.com	Optical Networking	www.ti.com/opticalnetwork
Microcontrollers	microcontroller.ti.com	Security	www.ti.com/security
		Telephony	www.ti.com/telephony
		Video & Imaging	www.ti.com/video
		Wireless	www.ti.com/wireless

Mailing Address: Texas Instruments
Post Office Box 655303 Dallas, Texas 75265