1.0 Amp. Surface Mount Glass Passivated Ultrafast Recovery Rectifier

DO-214AC (SMA)

Voltage
50 to 600 V

Current
1.0 A

HYPERECTIFIER®

FEATURES

- Low profile package
- Ideal for automated placement
- Ultrafast recovery time for high efficiency
- Low power losses
- Low forward voltage drop
- High forward surge current capability
- Solder dip 260°C, 10s
- AEC-Q101 qualified
- Component in accordance to RoHS 2011/65/EU and WEEE 2002/96/EC
- Meets MSL level 1, per J-STD-020, LF maximum peak of 260° C

AUTOMOTIVE GRADE Available

Pb

e3

RoHS COMPLIANT

MECHANICAL DATA

- **Case:** DO-214AC (SMA). Epoxy meets UL 94V-0 flammability rating.
- **Polarity:** Color band denotes cathode end.
- **Terminals:** Matte tin plated leads, solderable per MIL-STD-750 Method 2026, J-STD-002 and JESD22-B102. Consumer grade, meets JESD 201 class 1A whisker test.
- **HE3 suffix** for high reliability grade, meets JESD 201 class 2 whisker test.

TYPICAL APPLICATIONS

Used in high frequency rectification and freewheeling application in switching mode converters and inverters for consumer, computer, automotive and telecommunication.

Datasheet Live

Maximun Ratings and Electrical Characteristics at 25°C

		FES1A	FES1B	FES1D	FES1F	FES1G	FES1J
	Marking Code	U1	U2	U3	U4	U5	U6
V_{RRM}	Maximum Recurrent Peak Reverse Voltage (V)	50	100	200	300	400	600
V_{RMS}	Maximum RMS Voltage (V)	35	70	140	210	280	420
V_{DC}	Maximum DC Blocking Voltage (V)	50	100	200	300	400	600
$I_{F(AV)}$	Forward current at T_C = 110 °C	1.0 A					
I_{FSM}	8.3 ms. peak forward surge current (Jedec Method)	30 A					
V_F	Maximum Instantaneous Forward Voltage at 1.0A	0.95 V			1.25 V		
I_R	Maximum DC Reverse Current at Rated DC Blocking Voltage Tj = 25 °C Tj = 100 °C	5 µA 100 µA					
T_{rr}	Maximum Reverse Recovery Time (0.5/1/0.25A)	50 ns					
C_j	Typical Junction Capacitance (1MHz; -4V)	8 pF					
$R_{th\ (j-c)}$ $R_{th\ (j-a)}$	Maximum Thermal Resistance (5x5 mm^2 x 130 µ Copper Area)	27 °C/W 75 °C/W					
T_j - T_{stg}	Operating Junction and Storage Temperature Range	-55 to + 150 °C					
E_{RSM}	Maximum non repetitive peak reverse Avalanche Energy Tj = 25°C, $I_{(BR)R}$ = 1A	20 mJ					

1.0 Amp. Surface Mount Glass Passivated Ultrafast Recovery Rectifier

Ordering information

PREFERRED P/N	PACKAGE CODE	DELIVERY MODE	BASE QUANTITY	UNIT WEIGHT (g)
FES1J TRTB	TRTB	13" diameter tape and reel	7,500	0.060
FES1J HE3 TRTB	TRTB	13" diameter tape and reel	7,500	0.060
FES1J TRTS	TRTS	7" diameter tape and reel	1,500	0.060

Package Outline Dimensions: (mm) DO-214AC (SMA)

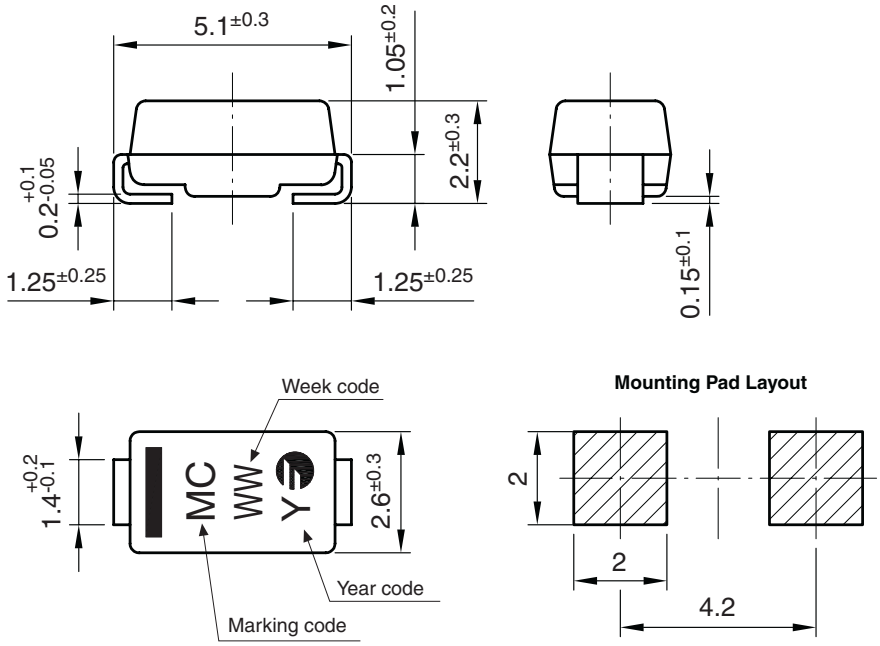

1.0 Amp. Surface Mount Glass Passivated Ultrafast Recovery Rectifier

Ratings and Characteristics (Ta 25 ºC unless otherwise noted)

FORWARD CURRENT DERATING CURVE

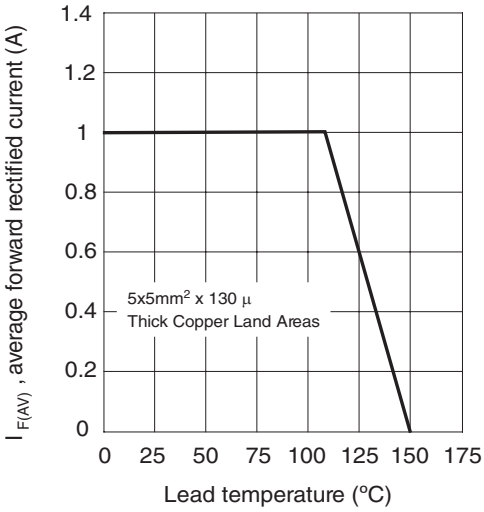

TYPICAL FORWARD CHARACTERISTIC

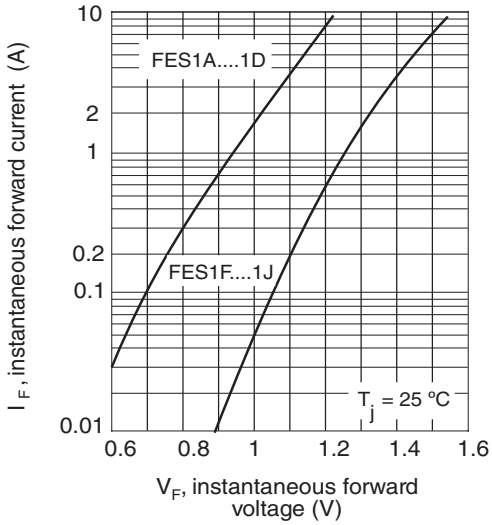

MAXIMUM NON REPETITIVE PEAK FORWARD SURGE CURRENT

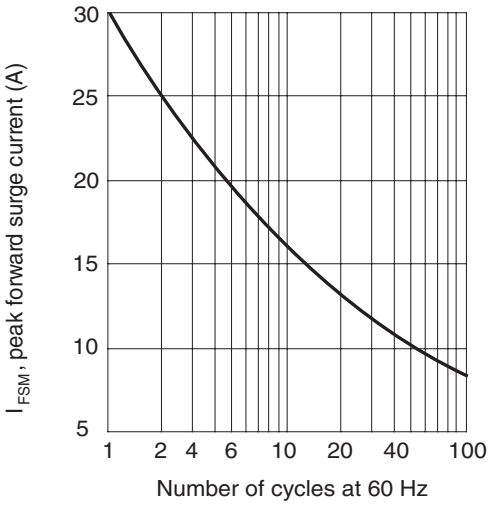

TYPICAL REVERSE CHARACTERISTIC

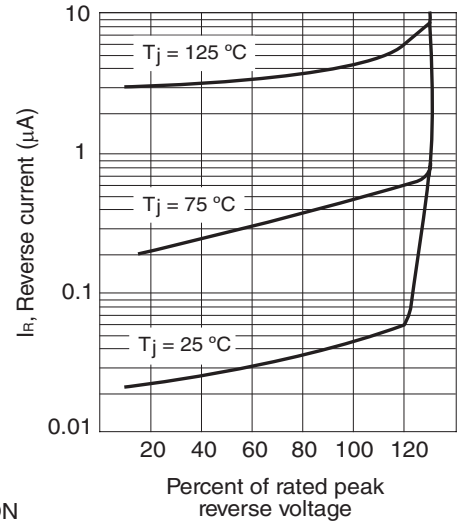

TYPICAL JUNCTION CAPACITANCE

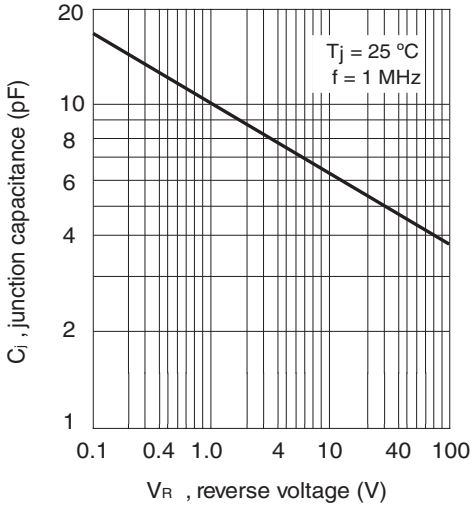

Disclaimer

All product, product specifications and data are subject to change without notice to improve reliability, function or design or otherwise.

Fagor Electrónica, S.Coop., its affiliates, agents, and employees, and all persons acting on its or their behalf (collectively, "Fagor"), disclaim any and all liability for any errors, inaccuracies or incompleteness contained in any datasheet or in any other disclosure relating to any product.

Fagor makes no warranty, representation or guarantee regarding the suitability of the products for any particular purpose or the continuing production of any product. To the maximum extent permitted by applicable law, Fagor disclaims (i) any and all liability arising out of the application or use of any product, (ii) any and all liability, including without limitation special, consequential or incidental damages, and (iii) any and all implied warranties, including warranties of fitness for particular purpose, non-infringement and merchantability.

Statements regarding the suitability of products for certain types of applications are based on Fagor's knowledge of typical requirements that are often placed on Fagor products in generic applications. Such statements are not binding statements about the suitability of products for a particular application. It is the customer's responsibility to validate that a particular product with the properties described in the product specification is suitable for use in a particular application. Parameters provided in datasheets and/or specifications may vary in different applications and performance may vary over time. All operating parameters, including typical parameters, must be validated for each customer application by the customer's technical experts. Product specifications do not expand or otherwise modify Fagor's terms and conditions of purchase, including but nos limited to the warranty expressed therein.

Except as expressly indicated in writing. Fagor products are not designed for use in medical, life-saving, or life-sustaining applications or for any other application in which the failure of the Fagor product could result in personal injury or death. Customers using or selling Fagor products not expressly indicated for use in such applications do so at their own risk and agree to fully indemnify and hold Fagor and its distributors harmless from and against any and all claims, liabilities, expenses and damages arising or resulting in connection with such use or sale, including attomeys fees, even if such claim alleges that Fagor or its distributor was negligent regarding the design or manufacture of the part. Please contact authorized Fagor personnel to obtain written terms and conditions regarding products designed for such applications.

No license, express or implied, by estoppel or otherwise, to any intellectual property rights is granted by this document or by any conduct of Fagor, Product names and markings noted herein may be trademarks of their respective owners.