2N3700
2N3701

SILICON
NPN TRANSISTORS

TO-18 CASE

www.centralsemi.com

DESCRIPTION:

The CENTRAL SEMICONDUCTOR 2N3700 and 2N3701 are silicon NPN transistors designed for high current general purpose applications.

MARKING: FULL PART NUMBER

MAXIMUM RATINGS: (T_A=25°C unless otherwise noted)

	SYMBOL		UNITS
Collector-Base Voltage	V_{CBO}	140	V
Collector-Emitter Voltage	V_{CEO}	80	V
Emitter-Base Voltage	V_{EBO}	7.0	V
Continuous Collector Current	I_C	1.0	A
Power Dissipation (T_C=25°C)	P_D	1.8	W
Power Dissipation	P_D	500	mW
Operating and Storage Junction Temperature	T_J, T_{stg}	-65 to +200	°C
Thermal Resistance	Θ_{JA}	350	°C/W
Thermal Resistance	Θ_{JC}	97.2	°C/W

Datasheet.Live

ELECTRICAL CHARACTERISTICS: (T_A=25°C unless otherwise noted)

		2N3700		2N3701		
SYMBOL	**TEST CONDITIONS**	**MIN**	**MAX**	**MIN**	**MAX**	**UNITS**
I_{CBO}	V_{CB}=90V	-	10	-	10	nA
I_{CBO}	V_{CB}=90V, T_A=150°C	-	10	-	10	µA
I_{EBO}	V_{EB}=5.0V	-	10	-	10	nA
BV_{CBO}	I_C=100µA	140	-	140	-	V
BV_{CEO}	I_C=30mA	80	-	80	-	V
BV_{EBO}	I_E=100µA	7.0	-	7.0	-	V
$V_{CE(SAT)}$	I_C=150mA, I_B=15mA	-	0.2	-	0.2	V
$V_{CE(SAT)}$	I_C=500mA, I_B=50mA	-	0.5	-	0.5	V
$V_{BE(SAT)}$	I_C=150mA, I_B=15mA	-	1.1	-	1.1	V
h_{FE}	V_{CE}=10V, I_C=0.1mA	50	-	30	100	
h_{FE}	V_{CE}=10V, I_C=10mA	90	-	40	120	
h_{FE}	V_{CE}=10V, I_C=150mA	100	300	40	120	
h_{FE}	V_{CE}=10V, I_C=150mA, T_A=-55°C	40	-	-	-	
h_{FE}	V_{CE}=10V, I_C=500mA	50	-	30	100	
h_{FE}	V_{CE}=10V, I_C=1.0A	15	-	15	-	

R1 (4-March 2014)

2N3700
2N3701

SILICON
NPN TRANSISTORS

ELECTRICAL CHARACTERISTICS - Continued: (T_A=25°C unless otherwise noted)

		2N3700		2N3701		
SYMBOL	**TEST CONDITIONS**	**MIN**	**MAX**	**MIN**	**MAX**	**UNITS**
f_T	V_{CE}=10V, I_C=50mA, f=20MHz	100	400	80	400	MHz
C_{ob}	V_{CB}=10V, I_E=0, f=1.0MHz	-	12	-	12	pF
C_{ib}	V_{EB}=0.5V, I_C=0, f=1.0MHz	-	60	-	60	pF
h_{fe}	V_{CE}=5.0V, I_C=1.0mA, f=1.0kHz	80	400	30	200	
$r_b'C_c$	V_{CB}=10V, I_E=10mA, f=4.0MHz	25	400	25	400	pS
NF	V_{CE}=10V, I_C=100μA, f=1.0kHz, R_S=1.0kΩ	-	4.0	-	4.0	dB

TO-18 CASE - MECHANICAL OUTLINE

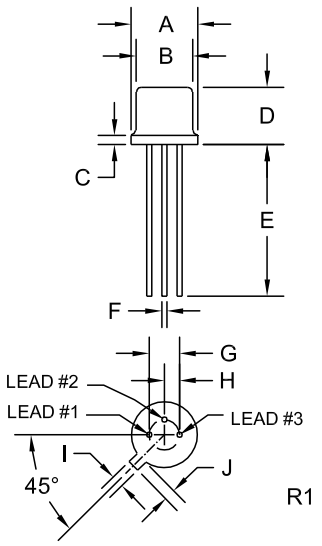

DIMENSIONS				
	INCHES		MILLIMETERS	
SYMBOL	MIN	MAX	MIN	MAX
A (DIA)	0.209	0.230	5.31	5.84
B (DIA)	0.178	0.195	4.52	4.95
C	-	0.030	-	0.76
D	0.170	0.210	4.32	5.33
E	0.500	-	12.70	-
F (DIA)	0.016	0.019	0.41	0.48
G (DIA)	0.100		2.54	
H	0.050		1.27	
I	0.036	0.046	0.91	1.17
J	0.028	0.048	0.71	1.22

TO-18 (REV: R1)

LEAD CODE:
1) Emitter
2) Base
3) Collector

MARKING:
FULL PART NUMBER

OUTSTANDING SUPPORT AND SUPERIOR SERVICES

PRODUCT SUPPORT

Central's operations team provides the highest level of support to insure product is delivered on-time.

- Supply management (Customer portals)
- Inventory bonding
- Consolidated shipping options
- Custom bar coding for shipments
- Custom product packing

DESIGNER SUPPORT/SERVICES

Central's applications engineering team is ready to discuss your design challenges. Just ask.

- Free quick ship samples (2nd day air)
- Online technical data and parametric search
- SPICE models
- Custom electrical curves
- Environmental regulation compliance
- Customer specific screening
- Up-screening capabilities
- Special wafer diffusions
- PbSn plating options
- Package details
- Application notes
- Application and design sample kits
- Custom product and package development

REQUESTING PRODUCT PLATING

1. If requesting Tin/Lead plated devices, add the suffix " TIN/LEAD" to the part number when ordering (example: 2N2222A TIN/LEAD).
2. If requesting Lead (Pb) Free plated devices, add the suffix " PBFREE" to the part number when ordering (example: 2N2222A PBFREE).

CONTACT US

Corporate Headquarters & Customer Support Team

Central Semiconductor Corp.
145 Adams Avenue
Hauppauge, NY 11788 USA
Main Tel: (631) 435-1110
Main Fax: (631) 435-1824
Support Team Fax: (631) 435-3388
www.centralsemi.com

Worldwide Field Representatives:
www.centralsemi.com/wwreps

Worldwide Distributors:
www.centralsemi.com/wwdistributors

For the latest version of Central Semiconductor's **LIMITATIONS AND DAMAGES DISCLAIMER**, which is part of Central's Standard Terms and Conditions of sale, visit: www.centralsemi.com/terms

Mouser Electronics

Authorized Distributor

Click to View Pricing, Inventory, Delivery & Lifecycle Information:

Central Semiconductor:

2N3700