- **Low Power Consumption**
- **Wide Common-Mode and Differential Voltage Ranges**
- **Low Input Bias and Offset Currents**
- **Output Short-Circuit Protection**
- **Low Total Harmonic Distortion . . . 0.003% Typ**
- **High Input Impedance . . . JFET-Input Stage**
- **Latch-Up-Free Operation**
- **High Slew Rate . . . 13 V/µs Typ**
- **Common-Mode Input Voltage Range Includes V_{CC+}**

description/ordering information

The TL08x JFET-input operational amplifier family is designed to offer a wider selection than any previously developed operational amplifier family. Each of these JFET-input operational amplifiers incorporates well-matched, high-voltage JFET and bipolar transistors in a monolithic integrated circuit. The devices feature high slew rates, low input bias and offset currents, and low offset-voltage temperature coefficient. Offset adjustment and external compensation options are available within the TL08x family.

The C-suffix devices are characterized for operation from 0°C to 70°C. The I-suffix devices are characterized for operation from −40°C to 85°C. The Q-suffix devices are characterized for operation from −40°C to 125°C. The M-suffix devices are characterized for operation over the full military temperature range of −55°C to 125°C.

ORDERING INFORMATION

T_J	V_{IO}max AT 25°C	PACKAGE†		ORDERABLE PART NUMBER	TOP-SIDE MARKING
0°C to 70°C	15 mV	PDIP (P)	Tube of 50	TL081CP	TL081CP
			Tube of 50	TL082CP	TL082CP
		PDIP (N)	Tube of 25	TL084CN	TL084CN
		SOIC (D)	Tube of 75	TL081CD	TL081C
			Reel of 2500	TL081CDR	
			Tube of 75	TL082CD	TL082C
			Reel of 2500	TL082CDR	
			Tube of 50	TL084CD	TL084C
			Reel of 2500	TL084CDR	
		SOP (PS)	Reel of 2000	TL081CPSR	T081
			Reel of 2000	TL082CPSR	T082
		SOP (NS)	Reel of 2000	TL084CNSR	TL084
		TSSOP (PW)	Tube of 150	TL082CPW	T082
			Reel of 2000	TL082CPWR	
			Tube of 90	TL084CPW	T084
			Reel of 2000	TL084CPWR	

† Package drawings, standard packing quantities, thermal data, symbolization, and PCB design guidelines are available at www.ti.com/sc/package.

Datasheet Live

Please be aware that an important notice concerning availability, standard warranty, and use in critical applications of Texas Instruments semiconductor products and disclaimers thereto appears at the end of this data sheet.

PRODUCTION DATA information is current as of publication date. Products conform to specifications per the terms of Texas Instruments standard warranty. Production processing does not necessarily include testing of all parameters.

Copyright © 2004, Texas Instruments Incorporated

On products compliant to MIL-PRF-38535, all parameters are tested unless otherwise noted. On all other products, production processing does not necessarily include testing of all parameters.

description/ordering information (continued)

ORDERING INFORMATION

T_J	V_{IO}max AT 25°C	PACKAGE†		ORDERABLE PART NUMBER	TOP-SIDE MARKING
0°C to 70°C	6 mV	PDIP (P)	Tube of 50	TL081ACP	TL081ACP
			Tube of 50	TL082ACP	TL082ACP
		PDIP (N)	Tube of 25	TL084ACN	TL084ACN
		SOIC (D)	Tube of 75	TL081ACD	081AC
			Reel of 2500	TL081ACDR	
			Tube of 75	TL082ACD	082AC
			Reel of 2500	TL082ACDR	
			Tube of 50	TL084ACD	TL084AC
			Reel of 2500	TL084ACDR	
		SOP (PS)	Reel of 2000	TL082ACPSR	T082A
		SOP (NS)	Reel of 2000	TL084ACNSR	TL084A
	3 mV	PDIP (P)	Tube of 50	TL081BCP	TL081BCP
			Tube of 50	TL082BCP	TL082BCP
		PDIP (N)	Tube of 25	TL084BCN	TL084BCN
		SOIC (D)	Tube of 75	TL081BCD	081BC
			Reel of 2500	TL081BCDR	
			Tube of 75	TL082BCD	082BC
			Reel of 2500	TL082BCDR	
			Tube of 50	TL084BCD	TL084BC
			Reel of 2500	TL084BCDR	
−40°C to 85°C	6 mV	PDIP (P)	Tube of 50	TL081IP	TL081IP
			Tube of 50	TL082IP	TL082IP
		PDIP (N)	Tube of 25	TL084IN	TL081IN
		SOIC (D)	Tube of 75	TL081ID	TL081I
			Reel of 2500	TL081IDR	
			Tube of 75	TL082ID	TL082I
			Reel of 2500	TL082IDR	
			Tube of 50	TL084ID	TL084I
			Reel of 2500	TL084IDR	
		TSSOP (PW)	Reel of 2000	TL082IPWR	Z082
−40°C to 125°C	9 mV	SOIC (D)	Tube of 50	TL084QD	TL084QD
			Reel of 2500	TL084QDR	
−55°C to 125°C	9 mV	CDIP (J)	Tube of 25	TL084MJ	TL084MJ
		LCCC (FK)	Reel of 55	TL084FK	TL084FK
	6 mV	CDIP (JG)	Tube of 50	TL082MJG	TL082MJG
		LCCC (FK)	Tube of 55	TL082MFK	TL082MFK

† Package drawings, standard packing quantities, thermal data, symbolization, and PCB design guidelines are available at www.ti.com/sc/package.

TL081, TL081A, TL081B
D, P, OR PS PACKAGE
(TOP VIEW)

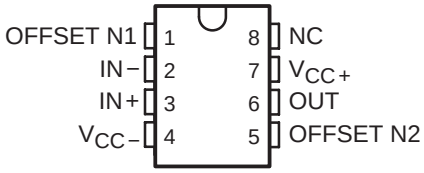

NC − No internal connection

TL082, TL082A, TL082B
D, JG, P, PS, OR PW PACKAGE
(TOP VIEW)

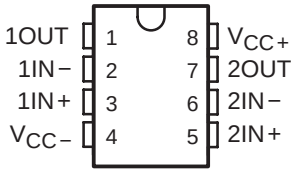

TL084, TL084A, TL084B
D, J, N, NS, OR PW PACKAGE
(TOP VIEW)

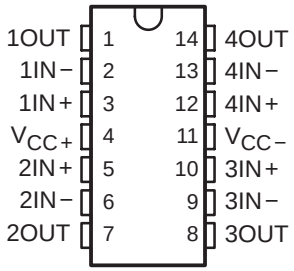

TL082M . . . FK PACKAGE
(TOP VIEW)

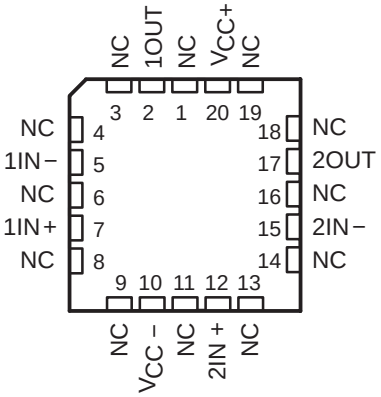

NC − No internal connection

TL084M . . . FK PACKAGE
(TOP VIEW)

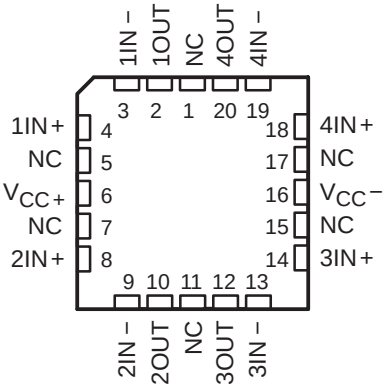

NC − No internal connection

symbols

TL081

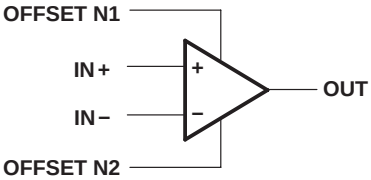

TL082 (EACH AMPLIFIER)
TL084 (EACH AMPLIFIER)

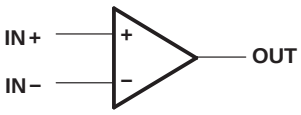

schematic (each amplifier)

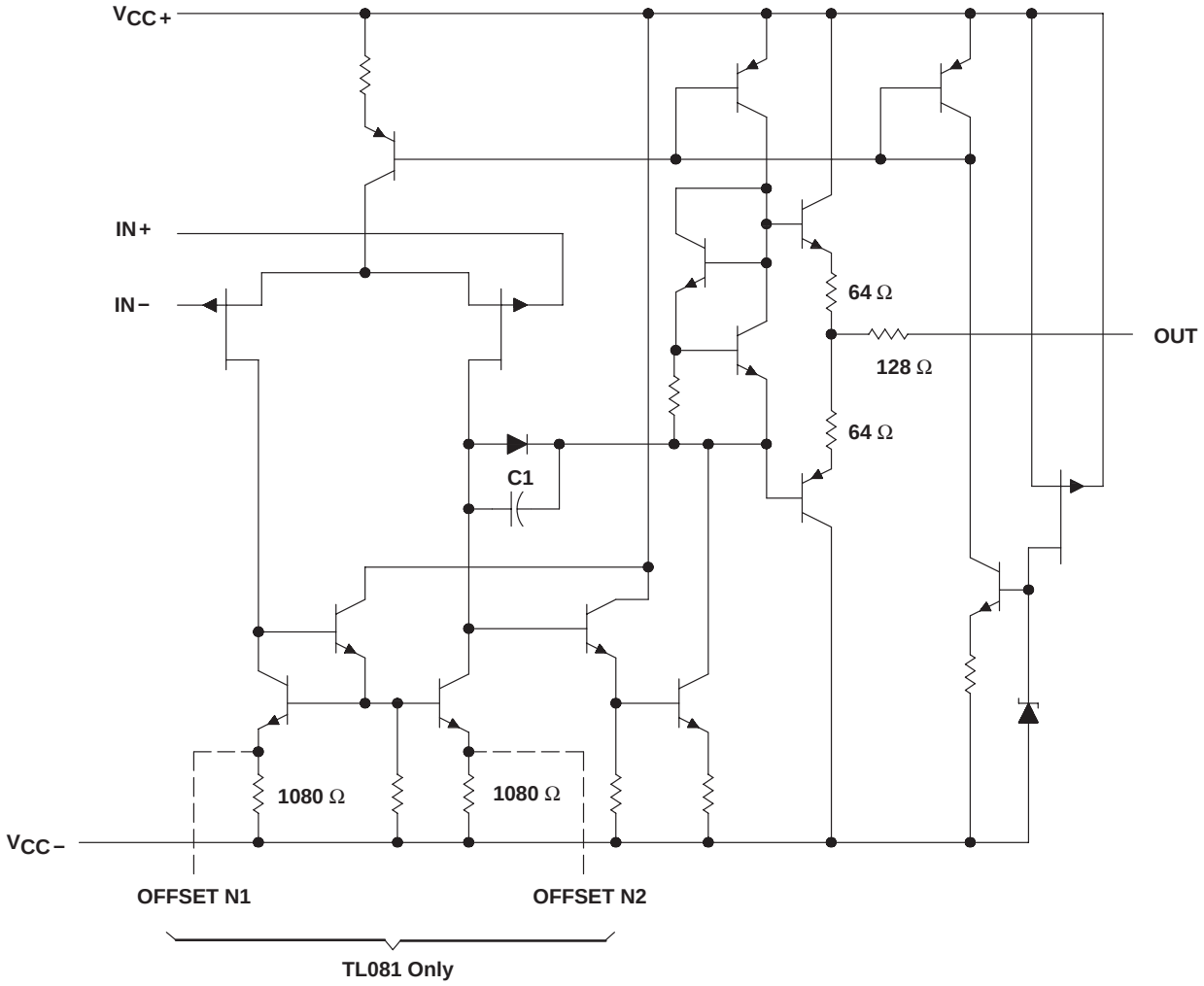

Component values shown are nominal.

absolute maximum ratings over operating free-air temperature range (unless otherwise noted)†

		TL08_C TL08_AC TL08_BC	TL08_I	TL084Q	TL08_M	UNIT
Supply voltage, V_{CC+} (see Note 1)		18	18	18	18	V
Supply voltage V_{CC-} (see Note 1)		−18	−18	−18	−18	V
Differential input voltage, V_{ID} (see Note 2)		±30	±30	±30	±30	V
Input voltage, V_I (see Notes 1 and 3)		±15	±15	±15	±15	V
Duration of output short circuit (see Note 4)		Unlimited	Unlimited	Unlimited	Unlimited	
Continuous total power dissipation		See Dissipation Rating Table				
Operating free-air temperature range, T_A		0 to 70	− 40 to 85	− 40 to 125	− 55 to 125	°C
Package thermal impedance, θ_{JA} (see Notes 5 and 6)	D package (8-pin)	97	97			°C/W
	D package (14-pin)	86	86			
	N package (14-pin)	76	76			
	NS package (14-pin)	80				
	P package (8-pin)	85	85			
	PS package (8-pin)	95	95			
	PW package (8-pin)	149				
	PW package (14-pin)	113	113			
Operating virtual junction temperature		150	150	150	150	°C
Case temperature for 60 seconds, T_C	FK package				260	°C
Lead temperature 1,6 mm (1/16 inch) from case for 60 seconds	J or JG package				300	°C
Storage temperature range, T_{stg}		− 65 to 150	− 65 to 150	− 65 to 150	− 65 to 150	°C

† Stresses beyond those listed under “absolute maximum ratings” may cause permanent damage to the device. These are stress ratings only, and functional operation of the device at these or any other conditions beyond those indicated under “recommended operating conditions” is not implied. Exposure to absolute-maximum-rated conditions for extended periods may affect device reliability.

NOTES:
1. All voltage values, except differential voltages, are with respect to the midpoint between V_{CC+} and V_{CC-}.
2. Differential voltages are at IN+ with respect to IN−.
3. The magnitude of the input voltage must never exceed the magnitude of the supply voltage or 15 V, whichever is less.
4. The output may be shorted to ground or to either supply. Temperature and/or supply voltages must be limited to ensure that the dissipation rating is not exceeded.
5. Maximum power dissipation is a function of $T_J(max)$, θ_{JA}, and T_A. The maximum allowable power dissipation at any allowable ambient temperature is $P_D = (T_J(max) - T_A)/\theta_{JA}$. Operating at the absolute maximum T_J of 150°C can affect reliability.
6. The package thermal impedance is calculated in accordance with JESD 51-7.

DISSIPATION RATING TABLE

PACKAGE	$T_A \le 25°C$ POWER RATING	DERATING FACTOR	DERATE ABOVE T_A	$T_A = 70°C$ POWER RATING	$T_A = 85°C$ POWER RATING	$T_A = 125°C$ POWER RATING
D (14 pin)	680 mW	7.6 mW/°C	60°C	604 mW	490 mW	186 mW
FK	680 mW	11.0 mW/°C	88°C	680 mW	680 mW	273 mW
J	680 mW	11.0 mW/°C	88°C	680 mW	680 mW	273 mW
JG	680 mW	8.4 mW/°C	69°C	672 mW	546 mW	210 mW

electrical characteristics, $V_{CC\pm}$ = ±15 V (unless otherwise noted)

PARAMETER		TEST CONDITIONS		T_A†	TL081C TL082C TL084C			TL081AC TL082AC TL084AC			TLO81BC TL082BC TL084BC			TL081I TL082I TL084I			UNIT
					MIN	TYP	MAX	MIN	TYP	MAX	MIN	TYP	MAX	MIN	TYP	MAX	
V_{IO}	Input offset voltage	V_O = 0	R_S = 50 Ω	25°C		3	15		3	6		2	3		3	6	mV
				Full range			20			7.5			5			9	
α_{VIO}	Temperature coefficient of input offset voltage	V_O = 0	R_S = 50 Ω	Full range		18			18			18			18		µV/°C
I_{IO}	Input offset current‡	V_O = 0		25°C		5	200		5	100		5	100		5	100	pA
				Full range			2			2			2			10	nA
I_{IB}	Input bias current‡	V_O = 0		25°C		30	400		30	200		30	200		30	200	pA
				Full range			10			7			7			20	nA
V_{ICR}	Common-mode input voltage range			25°C	±11	−12 to 15		±11	−12 to 15		±11	−12 to 15		±11	−12 to 15		V
V_{OM}	Maximum peak output voltage swing	R_L = 10 kΩ		25°C	±12	±13.5		±12	±13.5		±12	±13.5		±12	±13.5		V
		R_L ≥ 10 kΩ		Full range	±12			±12			±12			±12			
		R_L ≥ 2 kΩ			±10	±12		±10	±12		±10	±12		±10	±12		
A_{VD}	Large-signal differential voltage amplification	V_O = ±10 V,	R_L ≥ 2 kΩ	25°C	25	200		50	200		50	200		50	200		V/mV
		V_O = ±10 V,	R_L ≥ 2 kΩ	Full range	15			25			25			25			
B_1	Unity-gain bandwidth			25°C		3			3			3			3		MHz
r_i	Input resistance			25°C		10^{12}			10^{12}			10^{12}			10^{12}		Ω
CMRR	Common-mode rejection ratio	V_{IC} = V_{ICR}min, V_O = 0,	R_S = 50 Ω	25°C	70	86		75	86		75	86		75	86		dB
k_{SVR}	Supply-voltage rejection ratio ($\Delta V_{CC\pm}/\Delta V_{IO}$)	V_{CC} = ±15 V to ± 9 V, V_O = 0,	R_S = 50 Ω	25°C	70	86		80	86		80	86		80	86		dB
I_{CC}	Supply current (per amplifier)	V_O = 0,	No load	25°C		1.4	2.8		1.4	2.8		1.4	2.8		1.4	2.8	mA
V_{O1}/V_{O2}	Crosstalk attenuation	A_{VD} = 100		25°C		120			120			120			120		dB

† All characteristics are measured under open-loop conditions with zero common-mode voltage, unless otherwise specified. Full range for T_A is 0°C to 70°C for TL08_C, TL08_AC, TL08_BC and −40°C to 85°C for TL08_I.

‡ Input bias currents of an FET-input operational amplifier are normal junction reverse currents, which are temperature sensitive, as shown in Figure 17. Pulse techniques must be used that maintain the junction temperature as close to the ambient temperature as possible.

electrical characteristics, $V_{CC\pm} = \pm15$ V (unless otherwise noted)

PARAMETER		TEST CONDITIONS†	T_A	TL081M, TL082M			TL084Q, TL084M			UNIT
				MIN	TYP	MAX	MIN	TYP	MAX	
V_{IO}	Input offset voltage	$V_O = 0$, $R_S = 50\ \Omega$	25°C		3	6		3	9	mV
			Full range			9			15	
α_{VIO}	Temperature coefficient of input offset voltage	$V_O = 0$ $R_S = 50\ \Omega$	Full range		18			18		µV/°C
I_{IO}	Input offset current‡	$V_O = 0$	25°C		5	100		5	100	pA
			125°C			20			20	nA
I_{IB}	Input bias current‡	$V_O = 0$	25°C		30	200		30	200	pA
			125°C			50			50	nA
V_{ICR}	Common-mode input voltage range		25°C	±11	−12 to 15		±11	−12 to 15		V
V_{OM}	Maximum peak output voltage swing	$R_L = 10\ k\Omega$	25°C	±12	±13.5		±12	±13.5		V
		$R_L \geq 10\ k\Omega$	Full range	±12			±12			
		$R_L \geq 2\ k\Omega$		±10	±12		±10	±12		
A_{VD}	Large-signal differential voltage amplification	$V_O = \pm10$ V, $R_L \geq 2\ k\Omega$	25°C	25	200		25	200		V/mV
		$V_O = \pm10$ V, $R_L \geq 2\ k\Omega$	Full range	15			15			
B_1	Unity-gain bandwidth		25°C		3			3		MHz
r_i	Input resistance		25°C		10^{12}			10^{12}		Ω
CMRR	Common-mode rejection ratio	$V_{IC} = V_{ICR}min$, $V_O = 0$, $R_S = 50\ \Omega$	25°C	80	86		80	86		dB
k_{SVR}	Supply-voltage rejection ratio ($\Delta V_{CC\pm}/\Delta V_{IO}$)	$V_{CC} = \pm15$ V to ±9 V, $V_O = 0$, $R_S = 50\ \Omega$	25°C	80	86		80	86		dB
I_{CC}	Supply current (per amplifier)	$V_O = 0$, No load	25°C		1.4	2.8		1.4	2.8	mA
V_{O1}/V_{O2}	Crosstalk attenuation	$A_{VD} = 100$	25°C		120			120		dB

† All characteristics are measured under open-loop conditions, with zero common-mode input voltage, unless otherwise specified.
‡ Input bias currents of a FET-input operational amplifier are normal junction reverse currents, which are temperature sensitive, as shown in Figure 17. Pulse techniques must be used that maintain the junction temperatures as close to the ambient temperature as possible.

operating characteristics, $V_{CC\pm} = \pm15$ V, $T_A = 25°C$ (unless otherwise noted)

PARAMETER		TEST CONDITIONS				MIN	TYP	MAX	UNIT
SR	Slew rate at unity gain	$V_I = 10$ V,	$R_L = 2\ k\Omega$,	$C_L = 100$ pF,	See Figure 1	8*	13		V/µs
		$V_I = 10$ V, $T_A = -55°C$ to 125°C,	$R_L = 2\ k\Omega$, See Figure 1	$C_L = 100$ pF,		5*			
t_r	Rise time	$V_I = 20$ mV,	$R_L = 2\ k\Omega$,	$C_L = 100$ pF,	See Figure 1		0.05		µs
	Overshoot factor						20		%
V_n	Equivalent input noise voltage	$R_S = 20\ \Omega$	f = 1 kHz				18		nV/√Hz
			f = 10 Hz to 10 kHz				4		µV
I_n	Equivalent input noise current	$R_S = 20\ \Omega$,	f = 1 kHz				0.01		pA/√Hz
THD	Total harmonic distortion	$V_I rms = 6$ V, f = 1 kHz	$A_{VD} = 1$,	$R_S \leq 1\ k\Omega$,	$R_L \geq 2\ k\Omega$,		0.003		%

*On products compliant to MIL-PRF-38535, this parameter is not production tested.

operating characteristics, $V_{CC\pm}$ = ±15 V, T_A = 25°C

PARAMETER		TEST CONDITIONS				MIN	TYP	MAX	UNIT
SR	Slew rate at unity gain	V_I = 10 V,	R_L = 2 kΩ,	C_L = 100 pF,	See Figure 1	8	13		V/µs
t_r	Rise time	V_I = 20 mV,	R_L = 2 kΩ,	C_L = 100 pF,	See Figure 1		0.05		µs
	Overshoot factor						20		%
V_n	Equivalent input noise voltage	R_S = 20 Ω	f = 1 kHz				18		nV/√Hz
			f = 10 Hz to 10 kHz				4		µV
I_n	Equivalent input noise current	R_S = 20 Ω,	f = 1 kHz				0.01		pA/√Hz
THD	Total harmonic distortion	$V_I$rms = 6 V, f = 1 kHz	A_{VD} = 1,	R_S ≤ 1 kΩ,	R_L ≥ 2 kΩ,		0.003		%

PARAMETER MEASUREMENT INFORMATION

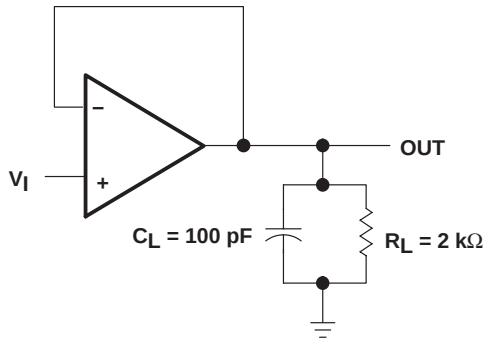

Figure 1

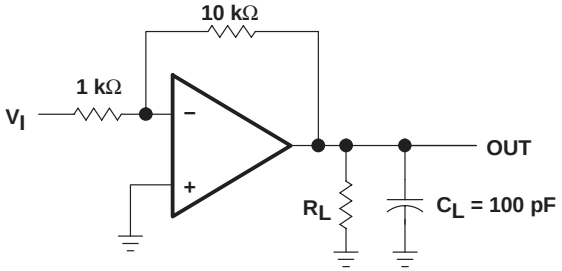

Figure 2

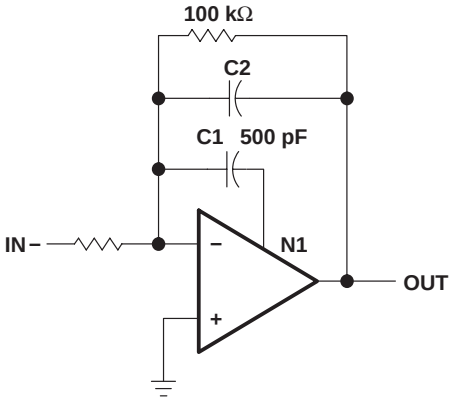

Figure 3

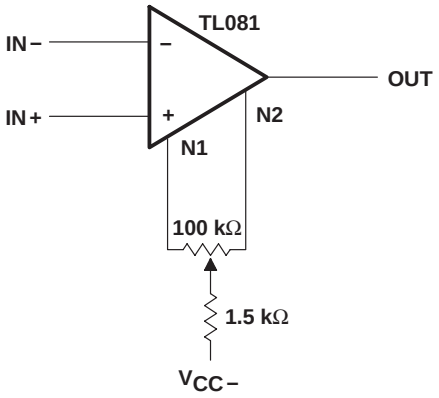

Figure 4

TYPICAL CHARACTERISTICS

Table of Graphs

			FIGURE
V_{OM}	Maximum peak output voltage	vs Frequency vs Free-air temperature vs Load resistance vs Supply voltage	5, 6, 7 8 9 10
A_{VD}	Large-signal differential voltage amplification	vs Free-air temperature vs Frequency	11 12
	Differential voltage amplification	vs Frequency with feed-forward compensation	13
P_D	Total power dissipation	vs Free-air temperature	14
I_{CC}	Supply current	vs Free-air temperature vs Supply voltage	15 16
I_{IB}	Input bias current	vs Free-air temperature	17
	Large-signal pulse response	vs Time	18
V_O	Output voltage	vs Elapsed time	19
CMRR	Common-mode rejection ratio	vs Free-air temperature	20
V_n	Equivalent input noise voltage	vs Frequency	21
THD	Total harmonic distortion	vs Frequency	22

MAXIMUM PEAK OUTPUT VOLTAGE vs FREQUENCY

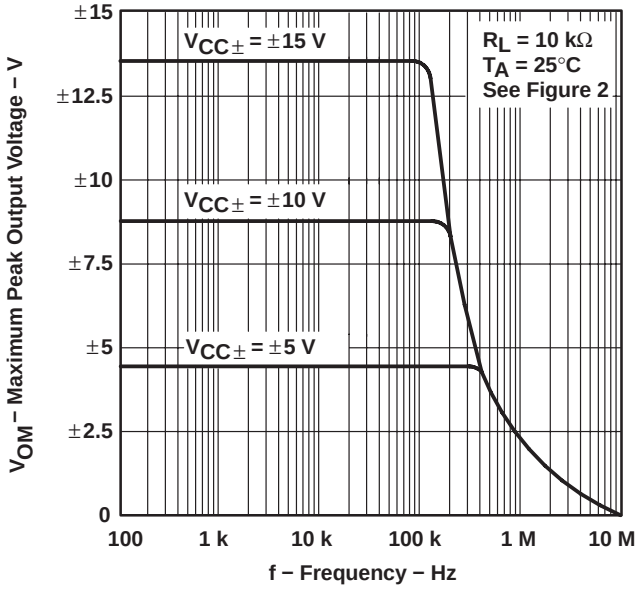

Figure 5

MAXIMUM PEAK OUTPUT VOLTAGE vs FREQUENCY

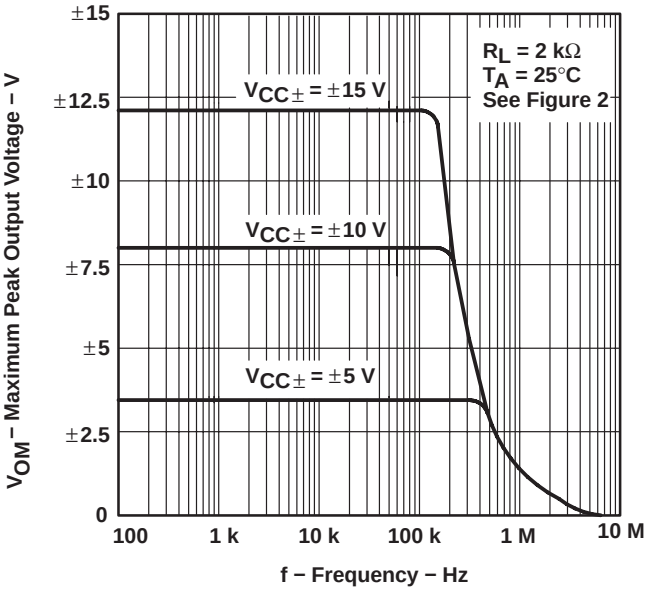

Figure 6

TYPICAL CHARACTERISTICS†

MAXIMUM PEAK OUTPUT VOLTAGE vs FREQUENCY

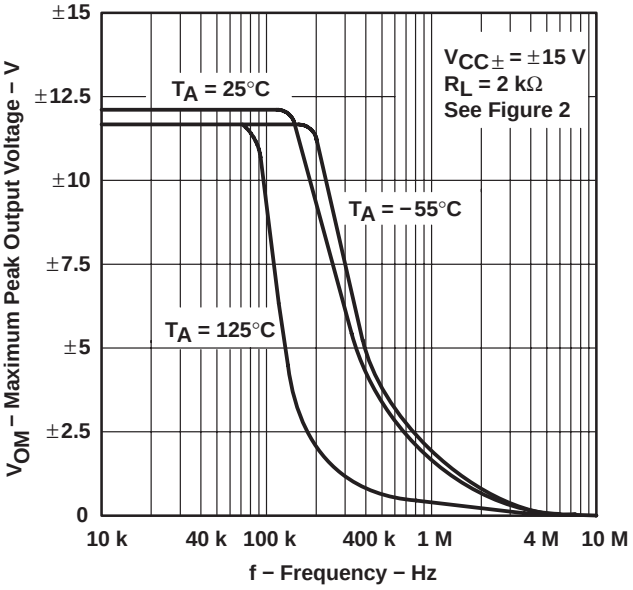

Figure 7

MAXIMUM PEAK OUTPUT VOLTAGE vs FREE-AIR TEMPERATURE

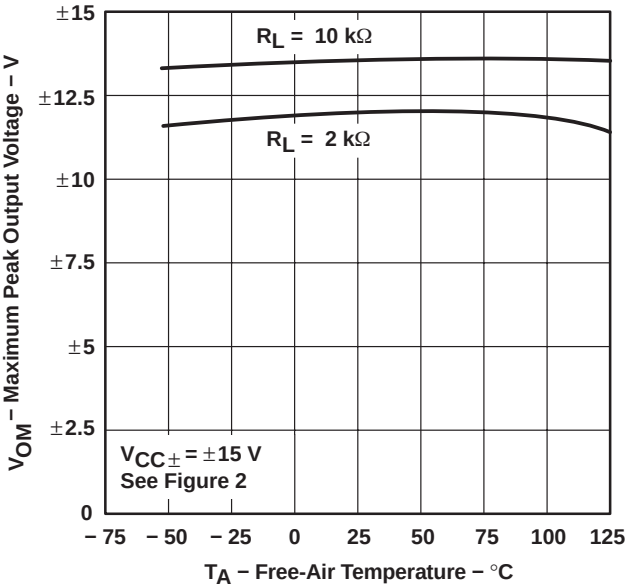

Figure 8

MAXIMUM PEAK OUTPUT VOLTAGE vs LOAD RESISTANCE

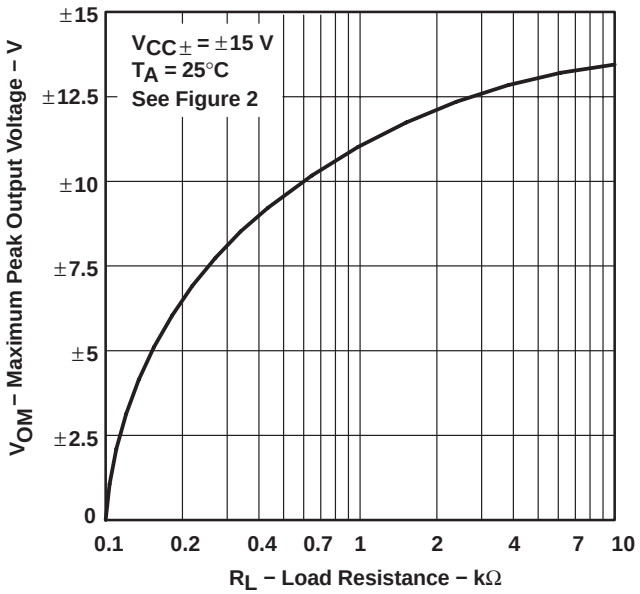

Figure 9

MAXIMUM PEAK OUTPUT VOLTAGE vs SUPPLY VOLTAGE

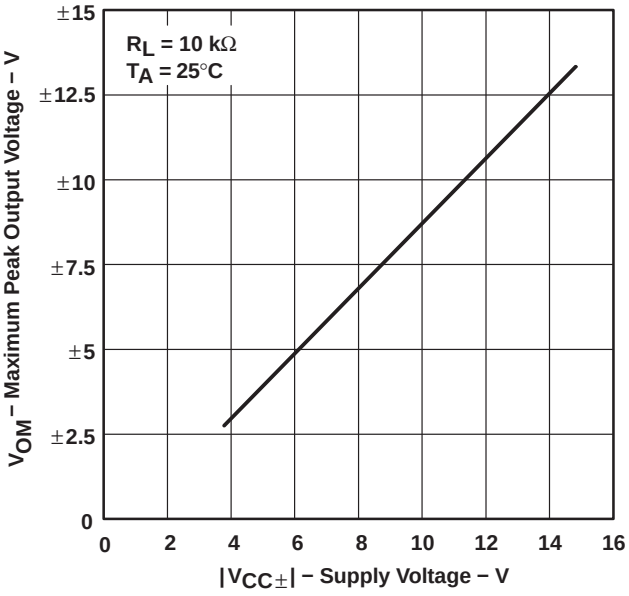

Figure 10

† Data at high and low temperatures are applicable only within the rated operating free-air temperature ranges of the various devices.

TYPICAL CHARACTERISTICS†

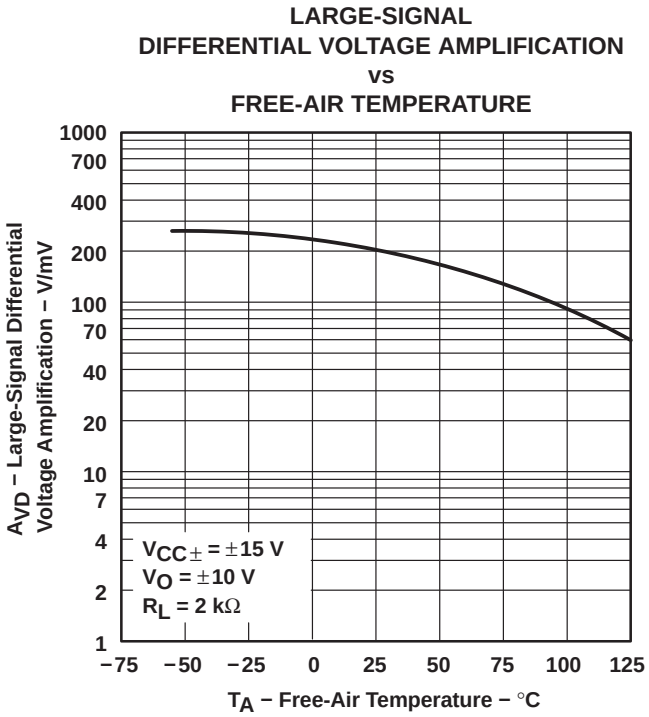

Figure 11

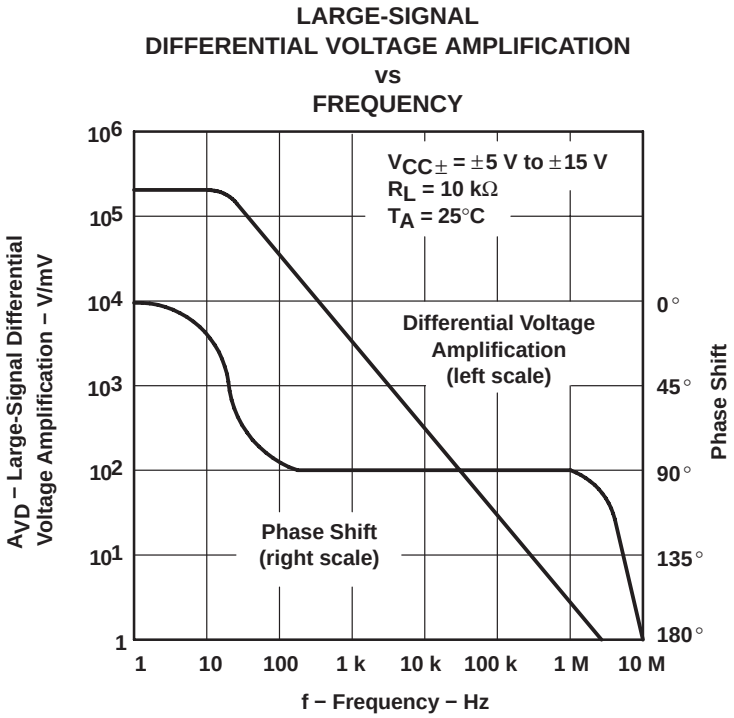

Figure 12

† Data at high and low temperatures are applicable only within the rated operating free-air temperature ranges of the various devices.

TYPICAL CHARACTERISTICS†

DIFFERENTIAL VOLTAGE AMPLIFICATION vs FREQUENCY WITH FEED-FORWARD COMPENSATION

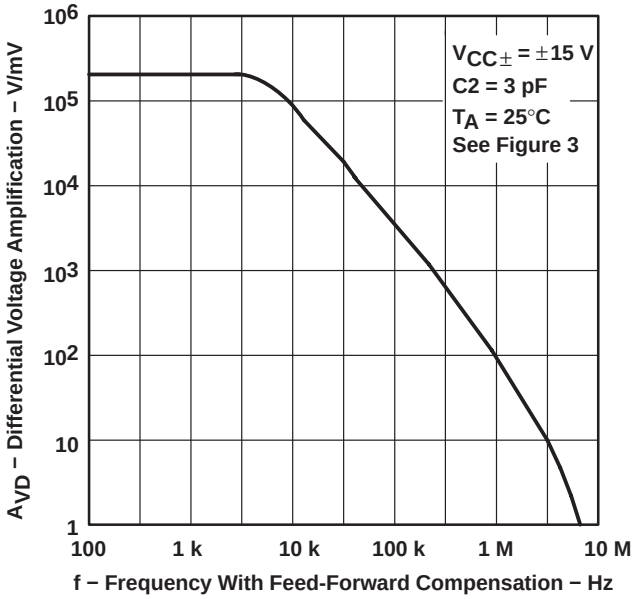

Figure 13

TOTAL POWER DISSIPATION vs FREE-AIR TEMPERATURE

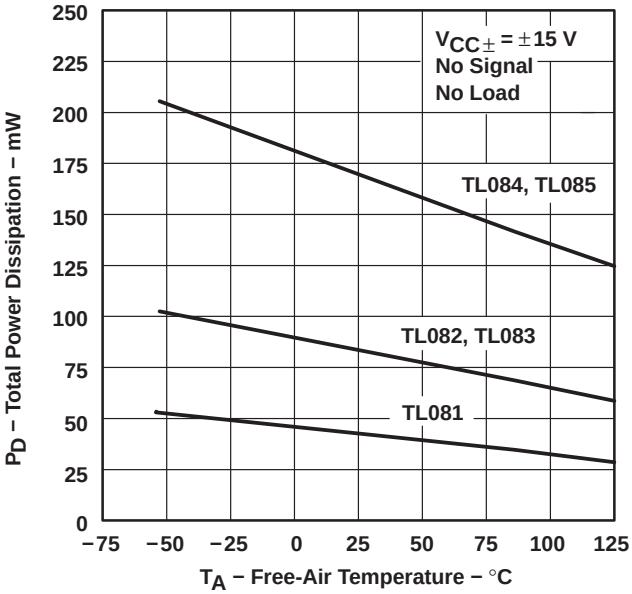

Figure 14

SUPPLY CURRENT PER AMPLIFIER vs FREE-AIR TEMPERATURE

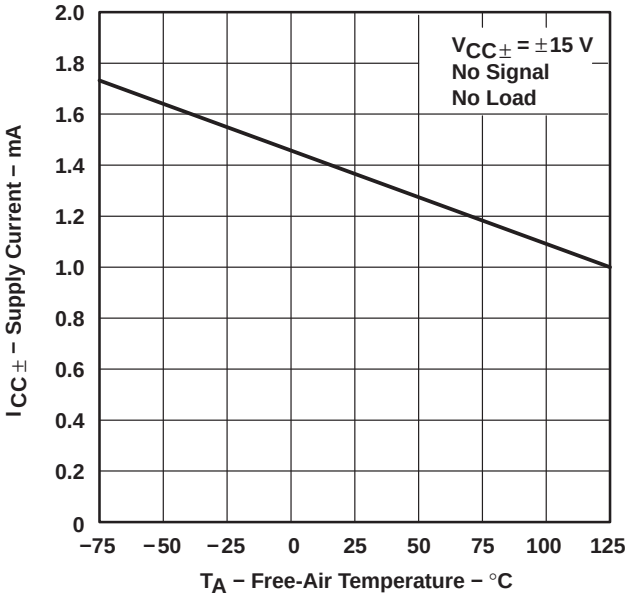

Figure 15

SUPPLY CURRENT vs SUPPLY VOLTAGE

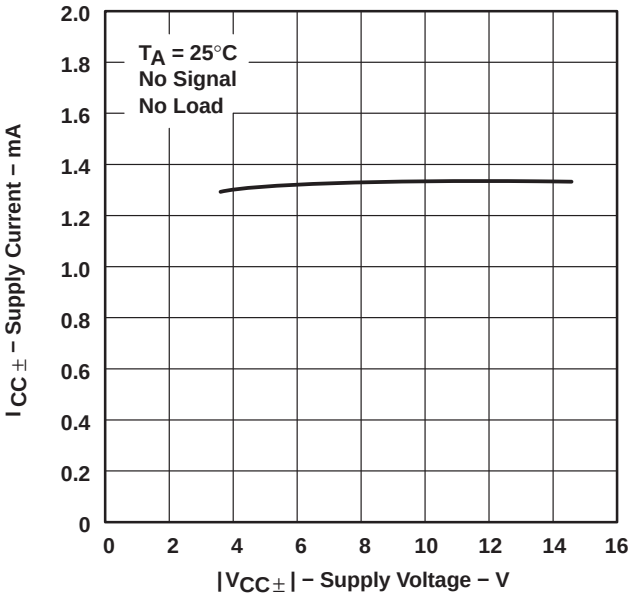

Figure 16

† Data at high and low temperatures are applicable only within the rated operating free-air temperature ranges of the various devices.

TYPICAL CHARACTERISTICS†

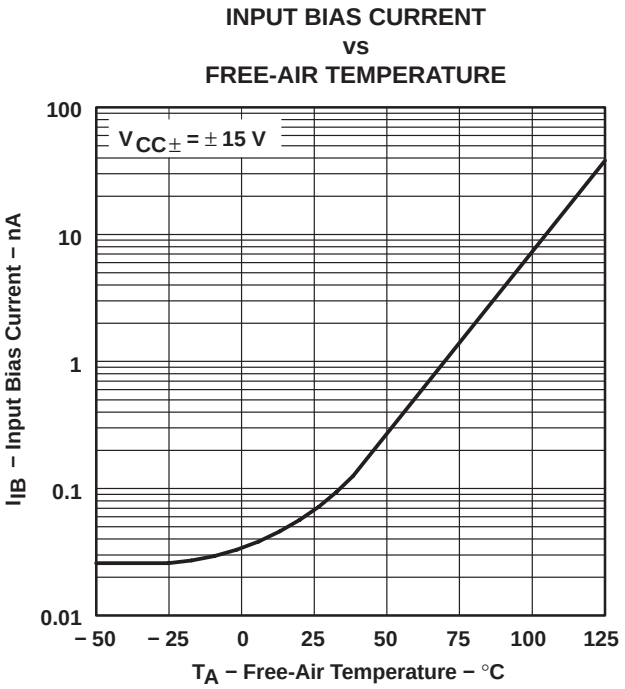

Figure 17

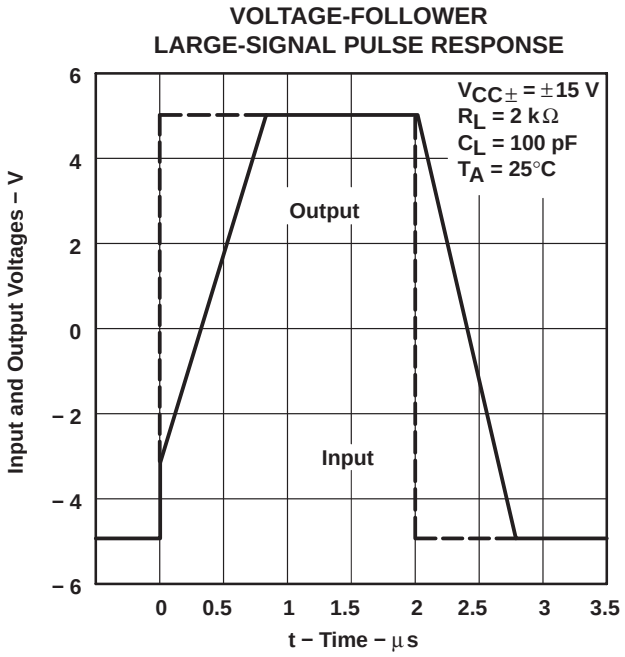

Figure 18

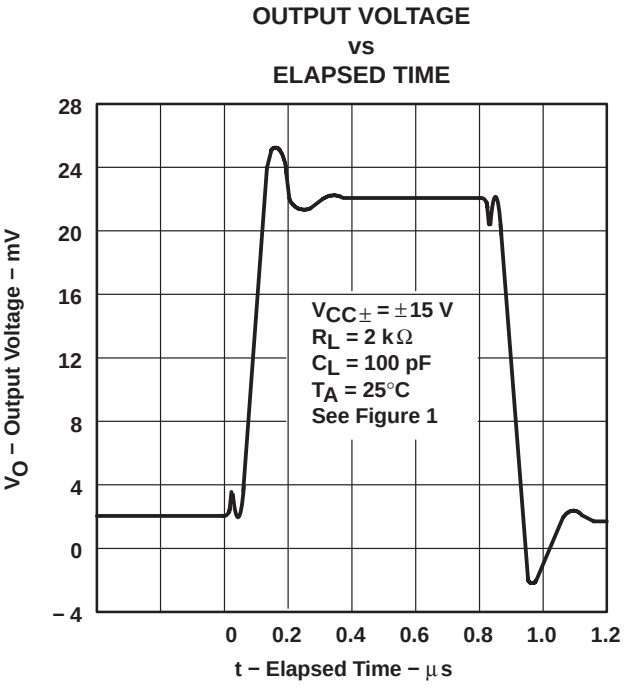

Figure 19

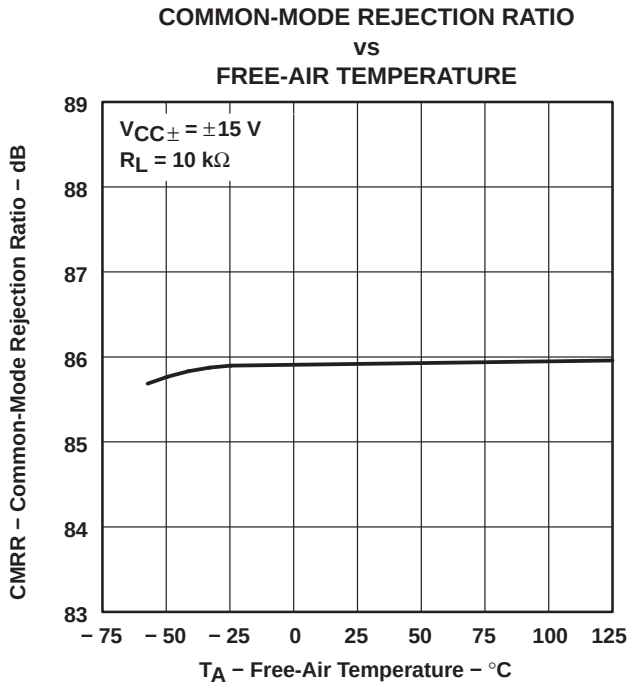

Figure 20

† Data at high and low temperatures are applicable only within the rated operating free-air temperature ranges of the various devices.

TYPICAL CHARACTERISTICS†

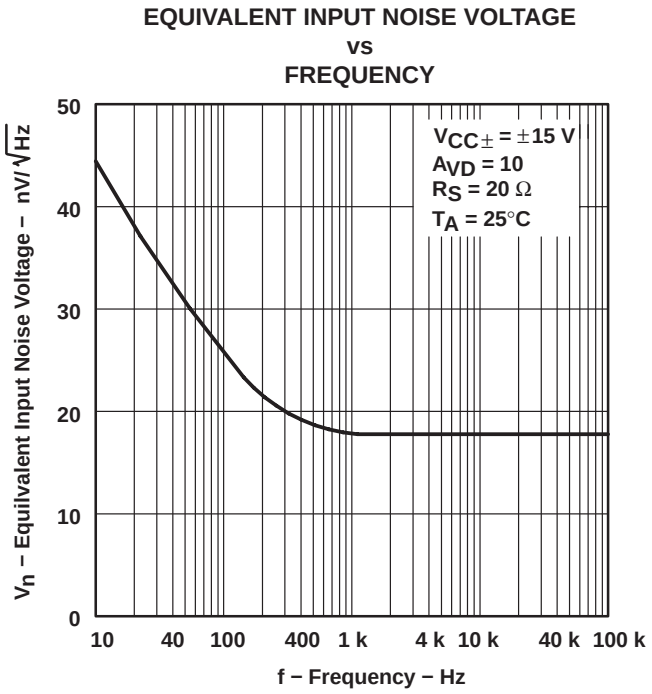

Figure 21

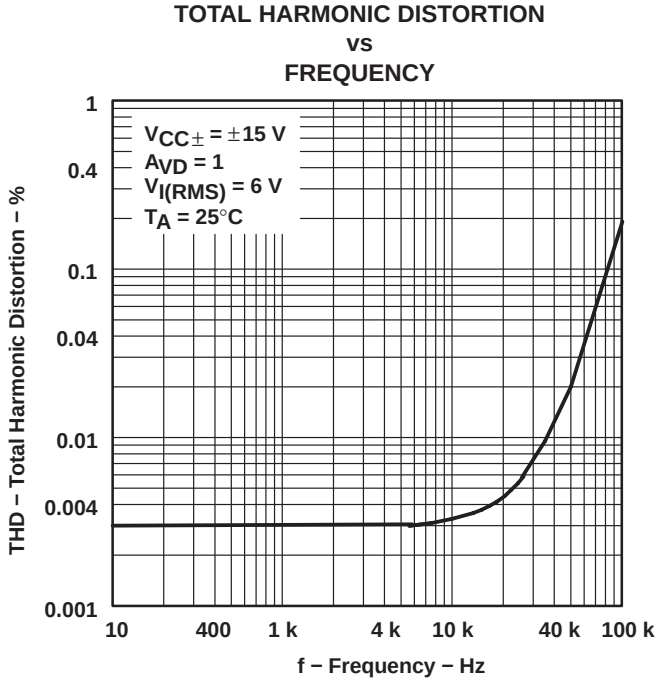

Figure 22

† Data at high and low temperatures are applicable only within the rated operating free-air temperature ranges of the various devices.

APPLICATION INFORMATION

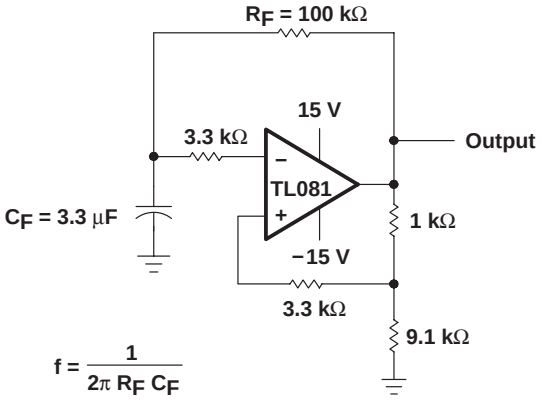

Figure 23

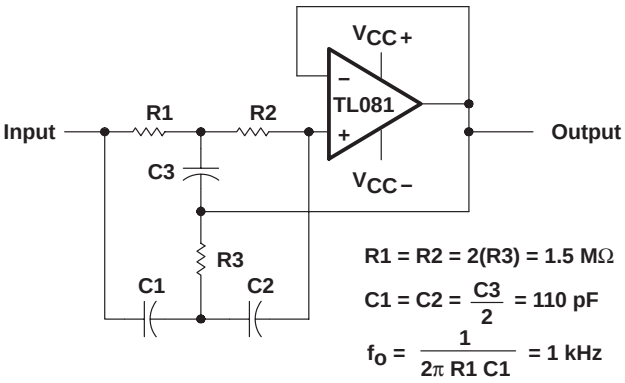

Figure 24

APPLICATION INFORMATION

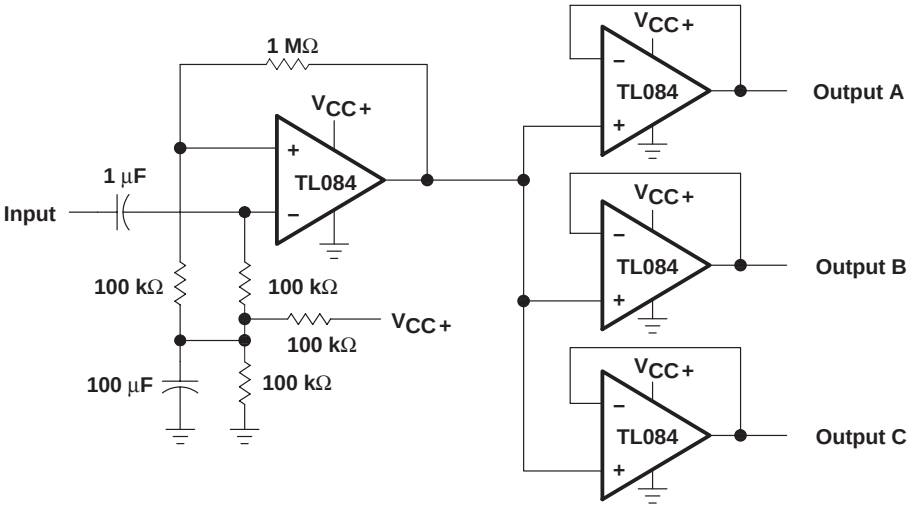

Figure 25. Audio-Distribution Amplifier

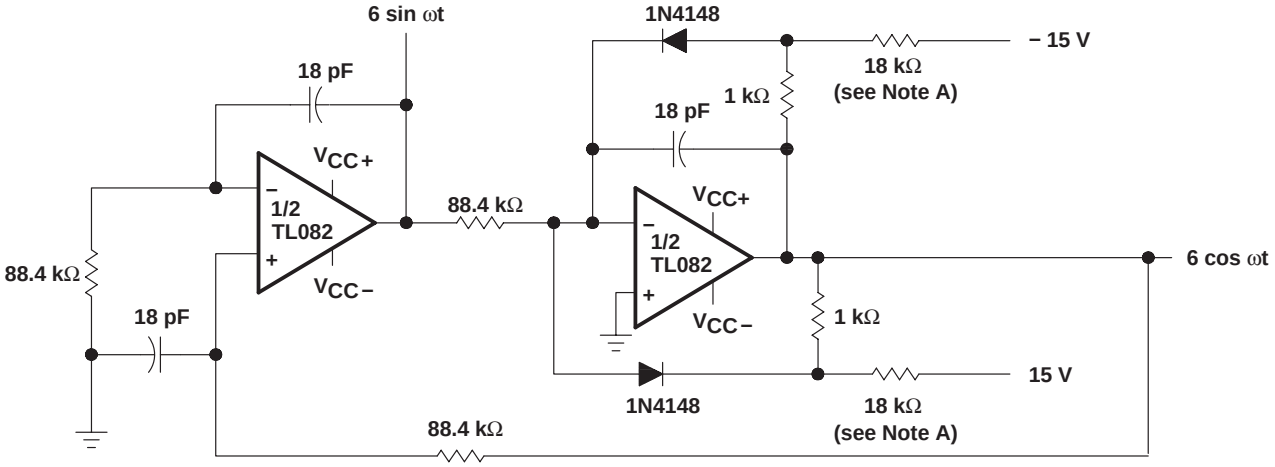

NOTE A: These resistor values may be adjusted for a symmetrical output.

Figure 26. 100-KHz Quadrature Oscillator

APPLICATION INFORMATION

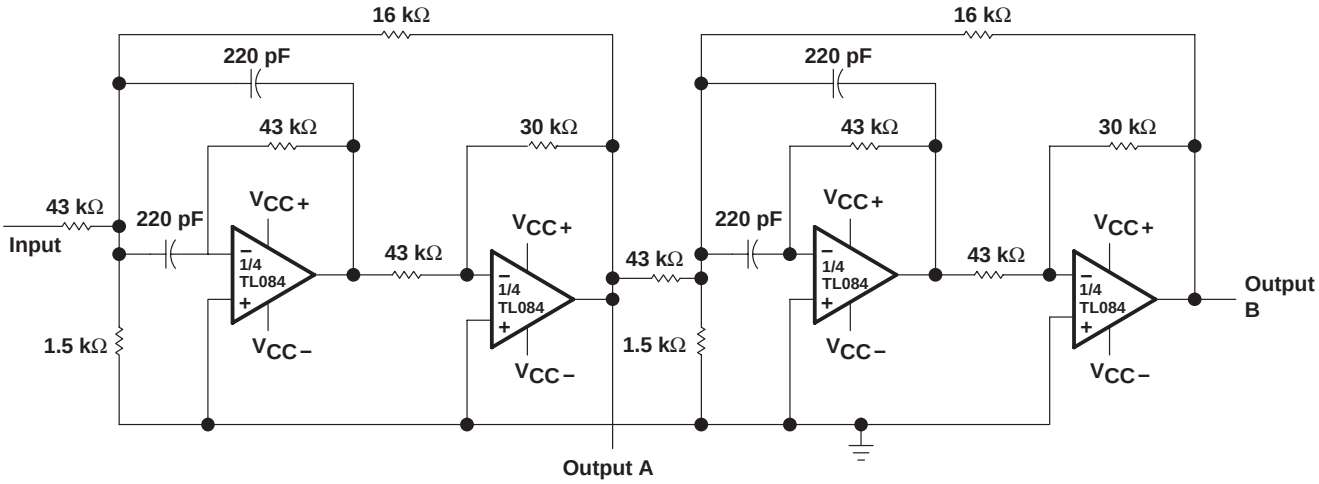

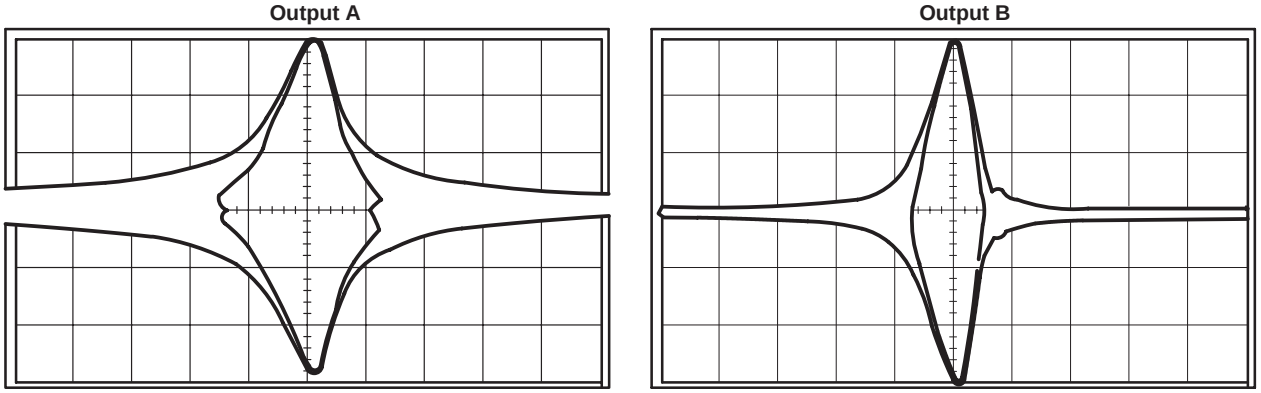

2 kHz/div
Second-Order Bandpass Filter
f_O = 100 kHz, Q = 30, GAIN = 4

2 kHz/div
Cascaded Bandpass Filter
f_O = 100 kHz, Q = 69, GAIN = 16

Figure 27. Positive-Feedback Bandpass Filter

PACKAGING INFORMATION

Orderable Device	Status (1)	Package Type	Package Drawing	Pins	Package Qty	Eco Plan (2)	Lead/ Ball Finish	MSL Peak Temp (3)	Samples (Requires Login)
5962-9851501Q2A	ACTIVE	LCCC	FK	20	1	TBD	Call TI	Call TI	
5962-9851501QPA	ACTIVE	CDIP	JG	8	1	TBD	A42	N / A for Pkg Type	
5962-9851503Q2A	ACTIVE	LCCC	FK	20	1	TBD	Call TI	Call TI	
5962-9851503QCA	ACTIVE	CDIP	J	14	1	TBD	Call TI	Call TI	
TL081ACD	ACTIVE	SOIC	D	8	75	Green (RoHS & no Sb/Br)	CU NIPDAU	Level-1-260C-UNLIM	
TL081ACDE4	ACTIVE	SOIC	D	8	75	Green (RoHS & no Sb/Br)	CU NIPDAU	Level-1-260C-UNLIM	
TL081ACDG4	ACTIVE	SOIC	D	8	75	Green (RoHS & no Sb/Br)	CU NIPDAU	Level-1-260C-UNLIM	
TL081ACDR	ACTIVE	SOIC	D	8	2500	Green (RoHS & no Sb/Br)	CU NIPDAU	Level-1-260C-UNLIM	
TL081ACDRE4	ACTIVE	SOIC	D	8	2500	Green (RoHS & no Sb/Br)	CU NIPDAU	Level-1-260C-UNLIM	
TL081ACDRG4	ACTIVE	SOIC	D	8	2500	Green (RoHS & no Sb/Br)	CU NIPDAU	Level-1-260C-UNLIM	
TL081ACJG	OBSOLETE	CDIP	JG	8		TBD	Call TI	Call TI	
TL081ACP	ACTIVE	PDIP	P	8	50	Pb-Free (RoHS)	CU NIPDAU	N / A for Pkg Type	
TL081ACPE4	ACTIVE	PDIP	P	8	50	Pb-Free (RoHS)	CU NIPDAU	N / A for Pkg Type	
TL081BCD	ACTIVE	SOIC	D	8	75	Green (RoHS & no Sb/Br)	CU NIPDAU	Level-1-260C-UNLIM	
TL081BCDE4	ACTIVE	SOIC	D	8	75	Green (RoHS & no Sb/Br)	CU NIPDAU	Level-1-260C-UNLIM	
TL081BCDG4	ACTIVE	SOIC	D	8	75	Green (RoHS & no Sb/Br)	CU NIPDAU	Level-1-260C-UNLIM	
TL081BCDR	ACTIVE	SOIC	D	8	2500	Green (RoHS & no Sb/Br)	CU NIPDAU	Level-1-260C-UNLIM	
TL081BCDRE4	ACTIVE	SOIC	D	8	2500	Green (RoHS & no Sb/Br)	CU NIPDAU	Level-1-260C-UNLIM	
TL081BCDRG4	ACTIVE	SOIC	D	8	2500	Green (RoHS & no Sb/Br)	CU NIPDAU	Level-1-260C-UNLIM	
TL081BCP	ACTIVE	PDIP	P	8	50	Pb-Free (RoHS)	CU NIPDAU	N / A for Pkg Type	
TL081BCPE4	ACTIVE	PDIP	P	8	50	Pb-Free (RoHS)	CU NIPDAU	N / A for Pkg Type	

Orderable Device	Status (1)	Package Type	Package Drawing	Pins	Package Qty	Eco Plan (2)	Lead/ Ball Finish	MSL Peak Temp (3)	Samples (Requires Login)
TL081CD	ACTIVE	SOIC	D	8	75	Green (RoHS & no Sb/Br)	CU NIPDAU	Level-1-260C-UNLIM	
TL081CDE4	ACTIVE	SOIC	D	8	75	Green (RoHS & no Sb/Br)	CU NIPDAU	Level-1-260C-UNLIM	
TL081CDG4	ACTIVE	SOIC	D	8	75	Green (RoHS & no Sb/Br)	CU NIPDAU	Level-1-260C-UNLIM	
TL081CDR	ACTIVE	SOIC	D	8	2500	Green (RoHS & no Sb/Br)	CU NIPDAU	Level-1-260C-UNLIM	
TL081CDRE4	ACTIVE	SOIC	D	8	2500	Green (RoHS & no Sb/Br)	CU NIPDAU	Level-1-260C-UNLIM	
TL081CDRG4	ACTIVE	SOIC	D	8	2500	Green (RoHS & no Sb/Br)	CU NIPDAU	Level-1-260C-UNLIM	
TL081CP	ACTIVE	PDIP	P	8	50	Pb-Free (RoHS)	CU NIPDAU	N / A for Pkg Type	
TL081CPE4	ACTIVE	PDIP	P	8	50	Pb-Free (RoHS)	CU NIPDAU	N / A for Pkg Type	
TL081CPSR	ACTIVE	SO	PS	8	2000	Green (RoHS & no Sb/Br)	CU NIPDAU	Level-1-260C-UNLIM	
TL081CPSRE4	ACTIVE	SO	PS	8	2000	Green (RoHS & no Sb/Br)	CU NIPDAU	Level-1-260C-UNLIM	
TL081CPSRG4	ACTIVE	SO	PS	8	2000	Green (RoHS & no Sb/Br)	CU NIPDAU	Level-1-260C-UNLIM	
TL081CPWLE	OBSOLETE	TSSOP	PW	8		TBD	Call TI	Call TI	
TL081ID	ACTIVE	SOIC	D	8	75	Green (RoHS & no Sb/Br)	CU NIPDAU	Level-1-260C-UNLIM	
TL081IDE4	ACTIVE	SOIC	D	8	75	Green (RoHS & no Sb/Br)	CU NIPDAU	Level-1-260C-UNLIM	
TL081IDG4	ACTIVE	SOIC	D	8	75	Green (RoHS & no Sb/Br)	CU NIPDAU	Level-1-260C-UNLIM	
TL081IDR	ACTIVE	SOIC	D	8	2500	Green (RoHS & no Sb/Br)	CU NIPDAU	Level-1-260C-UNLIM	
TL081IDRE4	ACTIVE	SOIC	D	8	2500	Green (RoHS & no Sb/Br)	CU NIPDAU	Level-1-260C-UNLIM	
TL081IDRG4	ACTIVE	SOIC	D	8	2500	Green (RoHS & no Sb/Br)	CU NIPDAU	Level-1-260C-UNLIM	
TL081IP	ACTIVE	PDIP	P	8	50	Pb-Free (RoHS)	CU NIPDAU	N / A for Pkg Type	
TL081IPE4	ACTIVE	PDIP	P	8	50	Pb-Free (RoHS)	CU NIPDAU	N / A for Pkg Type	

Orderable Device	Status (1)	Package Type	Package Drawing	Pins	Package Qty	Eco Plan (2)	Lead/ Ball Finish	MSL Peak Temp (3)	Samples (Requires Login)
TL081MFKB	OBSOLETE	LCCC	FK	20		TBD	Call TI	Call TI	
TL081MJG	OBSOLETE	CDIP	JG	8		TBD	Call TI	Call TI	
TL081MJGB	OBSOLETE	CDIP	JG	8		TBD	Call TI	Call TI	
TL082ACD	ACTIVE	SOIC	D	8	75	Green (RoHS & no Sb/Br)	CU NIPDAU	Level-1-260C-UNLIM	
TL082ACDE4	ACTIVE	SOIC	D	8	75	Green (RoHS & no Sb/Br)	CU NIPDAU	Level-1-260C-UNLIM	
TL082ACDG4	ACTIVE	SOIC	D	8	75	Green (RoHS & no Sb/Br)	CU NIPDAU	Level-1-260C-UNLIM	
TL082ACDR	ACTIVE	SOIC	D	8	2500	Green (RoHS & no Sb/Br)	CU NIPDAU	Level-1-260C-UNLIM	
TL082ACDRE4	ACTIVE	SOIC	D	8	2500	Green (RoHS & no Sb/Br)	CU NIPDAU	Level-1-260C-UNLIM	
TL082ACDRG4	ACTIVE	SOIC	D	8	2500	Green (RoHS & no Sb/Br)	CU NIPDAU	Level-1-260C-UNLIM	
TL082ACP	ACTIVE	PDIP	P	8	50	Pb-Free (RoHS)	CU NIPDAU	N / A for Pkg Type	
TL082ACPE4	ACTIVE	PDIP	P	8	50	Pb-Free (RoHS)	CU NIPDAU	N / A for Pkg Type	
TL082ACPSR	ACTIVE	SO	PS	8	2000	Green (RoHS & no Sb/Br)	CU NIPDAU	Level-1-260C-UNLIM	
TL082ACPSRE4	ACTIVE	SO	PS	8	2000	Green (RoHS & no Sb/Br)	CU NIPDAU	Level-1-260C-UNLIM	
TL082ACPSRG4	ACTIVE	SO	PS	8	2000	Green (RoHS & no Sb/Br)	CU NIPDAU	Level-1-260C-UNLIM	
TL082BCD	ACTIVE	SOIC	D	8	75	Green (RoHS & no Sb/Br)	CU NIPDAU	Level-1-260C-UNLIM	
TL082BCDE4	ACTIVE	SOIC	D	8	75	Green (RoHS & no Sb/Br)	CU NIPDAU	Level-1-260C-UNLIM	
TL082BCDG4	ACTIVE	SOIC	D	8	75	Green (RoHS & no Sb/Br)	CU NIPDAU	Level-1-260C-UNLIM	
TL082BCDR	ACTIVE	SOIC	D	8	2500	Green (RoHS & no Sb/Br)	CU NIPDAU	Level-1-260C-UNLIM	
TL082BCDRE4	ACTIVE	SOIC	D	8	2500	Green (RoHS & no Sb/Br)	CU NIPDAU	Level-1-260C-UNLIM	
TL082BCDRG4	ACTIVE	SOIC	D	8	2500	Green (RoHS & no Sb/Br)	CU NIPDAU	Level-1-260C-UNLIM	

Orderable Device	Status (1)	Package Type	Package Drawing	Pins	Package Qty	Eco Plan (2)	Lead/ Ball Finish	MSL Peak Temp (3)	Samples (Requires Login)
TL082BCP	ACTIVE	PDIP	P	8	50	Pb-Free (RoHS)	CU NIPDAU	N / A for Pkg Type	
TL082BCPE4	ACTIVE	PDIP	P	8	50	Pb-Free (RoHS)	CU NIPDAU	N / A for Pkg Type	
TL082CD	ACTIVE	SOIC	D	8	75	Green (RoHS & no Sb/Br)	CU NIPDAU	Level-1-260C-UNLIM	
TL082CDE4	ACTIVE	SOIC	D	8	75	Green (RoHS & no Sb/Br)	CU NIPDAU	Level-1-260C-UNLIM	
TL082CDG4	ACTIVE	SOIC	D	8	75	Green (RoHS & no Sb/Br)	CU NIPDAU	Level-1-260C-UNLIM	
TL082CDR	ACTIVE	SOIC	D	8	2500	Green (RoHS & no Sb/Br)	CU NIPDAU	Level-1-260C-UNLIM	
TL082CDRE4	ACTIVE	SOIC	D	8	2500	Green (RoHS & no Sb/Br)	CU NIPDAU	Level-1-260C-UNLIM	
TL082CDRG4	ACTIVE	SOIC	D	8	2500	Green (RoHS & no Sb/Br)	CU NIPDAU	Level-1-260C-UNLIM	
TL082CJG	OBSOLETE	CDIP	JG	8		TBD	Call TI	Call TI	
TL082CP	ACTIVE	PDIP	P	8	50	Pb-Free (RoHS)	CU NIPDAU	N / A for Pkg Type	
TL082CPE4	ACTIVE	PDIP	P	8	50	Pb-Free (RoHS)	CU NIPDAU	N / A for Pkg Type	
TL082CPSR	ACTIVE	SO	PS	8	2000	Green (RoHS & no Sb/Br)	CU NIPDAU	Level-1-260C-UNLIM	
TL082CPSRG4	ACTIVE	SO	PS	8	2000	Green (RoHS & no Sb/Br)	CU NIPDAU	Level-1-260C-UNLIM	
TL082CPW	ACTIVE	TSSOP	PW	8	150	Green (RoHS & no Sb/Br)	CU NIPDAU	Level-1-260C-UNLIM	
TL082CPWE4	ACTIVE	TSSOP	PW	8	150	Green (RoHS & no Sb/Br)	CU NIPDAU	Level-1-260C-UNLIM	
TL082CPWG4	ACTIVE	TSSOP	PW	8	150	Green (RoHS & no Sb/Br)	CU NIPDAU	Level-1-260C-UNLIM	
TL082CPWLE	OBSOLETE	TSSOP	PW	8		TBD	Call TI	Call TI	
TL082CPWR	ACTIVE	TSSOP	PW	8	2000	Green (RoHS & no Sb/Br)	CU NIPDAU	Level-1-260C-UNLIM	
TL082CPWRE4	ACTIVE	TSSOP	PW	8	2000	Green (RoHS & no Sb/Br)	CU NIPDAU	Level-1-260C-UNLIM	
TL082CPWRG4	ACTIVE	TSSOP	PW	8	2000	Green (RoHS & no Sb/Br)	CU NIPDAU	Level-1-260C-UNLIM	

Orderable Device	Status (1)	Package Type	Package Drawing	Pins	Package Qty	Eco Plan (2)	Lead/ Ball Finish	MSL Peak Temp (3)	Samples (Requires Login)
TL082ID	ACTIVE	SOIC	D	8	75	Green (RoHS & no Sb/Br)	CU NIPDAU	Level-1-260C-UNLIM	
TL082IDE4	ACTIVE	SOIC	D	8	75	Green (RoHS & no Sb/Br)	CU NIPDAU	Level-1-260C-UNLIM	
TL082IDG4	ACTIVE	SOIC	D	8	75	Green (RoHS & no Sb/Br)	CU NIPDAU	Level-1-260C-UNLIM	
TL082IDR	ACTIVE	SOIC	D	8	2500	Green (RoHS & no Sb/Br)	CU NIPDAU	Level-1-260C-UNLIM	
TL082IDRE4	ACTIVE	SOIC	D	8	2500	Green (RoHS & no Sb/Br)	CU NIPDAU	Level-1-260C-UNLIM	
TL082IDRG4	ACTIVE	SOIC	D	8	2500	Green (RoHS & no Sb/Br)	CU NIPDAU	Level-1-260C-UNLIM	
TL082IJG	OBSOLETE	CDIP	JG	8		TBD	Call TI	Call TI	
TL082IP	ACTIVE	PDIP	P	8	50	Pb-Free (RoHS)	CU NIPDAU	N / A for Pkg Type	
TL082IPE4	ACTIVE	PDIP	P	8	50	Pb-Free (RoHS)	CU NIPDAU	N / A for Pkg Type	
TL082IPWR	ACTIVE	TSSOP	PW	8	2000	Green (RoHS & no Sb/Br)	CU NIPDAU	Level-1-260C-UNLIM	
TL082IPWRE4	ACTIVE	TSSOP	PW	8	2000	Green (RoHS & no Sb/Br)	CU NIPDAU	Level-1-260C-UNLIM	
TL082IPWRG4	ACTIVE	TSSOP	PW	8	2000	Green (RoHS & no Sb/Br)	CU NIPDAU	Level-1-260C-UNLIM	
TL082MFK	OBSOLETE	LCCC	FK	20		TBD	Call TI	Call TI	
TL082MFKB	ACTIVE	LCCC	FK	20	1	TBD	POST-PLATE	N / A for Pkg Type	
TL082MJG	ACTIVE	CDIP	JG	8	1	TBD	A42	N / A for Pkg Type	
TL082MJGB	ACTIVE	CDIP	JG	8	1	TBD	A42	N / A for Pkg Type	
TL084ACD	ACTIVE	SOIC	D	14	50	Green (RoHS & no Sb/Br)	CU NIPDAU	Level-1-260C-UNLIM	
TL084ACDE4	ACTIVE	SOIC	D	14	50	Green (RoHS & no Sb/Br)	CU NIPDAU	Level-1-260C-UNLIM	
TL084ACDG4	ACTIVE	SOIC	D	14	50	Green (RoHS & no Sb/Br)	CU NIPDAU	Level-1-260C-UNLIM	
TL084ACDR	ACTIVE	SOIC	D	14	2500	Green (RoHS & no Sb/Br)	CU NIPDAU	Level-1-260C-UNLIM	
TL084ACDRE4	ACTIVE	SOIC	D	14	2500	Green (RoHS & no Sb/Br)	CU NIPDAU	Level-1-260C-UNLIM	

Orderable Device	Status (1)	Package Type	Package Drawing	Pins	Package Qty	Eco Plan (2)	Lead/ Ball Finish	MSL Peak Temp (3)	Samples (Requires Login)
TL084ACDRG4	ACTIVE	SOIC	D	14	2500	Green (RoHS & no Sb/Br)	CU NIPDAU	Level-1-260C-UNLIM	
TL084ACN	ACTIVE	PDIP	N	14	25	Pb-Free (RoHS)	CU NIPDAU	N / A for Pkg Type	
TL084ACNE4	ACTIVE	PDIP	N	14	25	Pb-Free (RoHS)	CU NIPDAU	N / A for Pkg Type	
TL084ACNSR	ACTIVE	SO	NS	14	2000	Green (RoHS & no Sb/Br)	CU NIPDAU	Level-1-260C-UNLIM	
TL084ACNSRE4	ACTIVE	SO	NS	14	2000	Green (RoHS & no Sb/Br)	CU NIPDAU	Level-1-260C-UNLIM	
TL084ACNSRG4	ACTIVE	SO	NS	14	2000	Green (RoHS & no Sb/Br)	CU NIPDAU	Level-1-260C-UNLIM	
TL084BCD	ACTIVE	SOIC	D	14	50	Green (RoHS & no Sb/Br)	CU NIPDAU	Level-1-260C-UNLIM	
TL084BCDE4	ACTIVE	SOIC	D	14	50	Green (RoHS & no Sb/Br)	CU NIPDAU	Level-1-260C-UNLIM	
TL084BCDG4	ACTIVE	SOIC	D	14	50	Green (RoHS & no Sb/Br)	CU NIPDAU	Level-1-260C-UNLIM	
TL084BCDR	ACTIVE	SOIC	D	14	2500	Green (RoHS & no Sb/Br)	CU NIPDAU	Level-1-260C-UNLIM	
TL084BCDRE4	ACTIVE	SOIC	D	14	2500	Green (RoHS & no Sb/Br)	CU NIPDAU	Level-1-260C-UNLIM	
TL084BCDRG4	ACTIVE	SOIC	D	14	2500	Green (RoHS & no Sb/Br)	CU NIPDAU	Level-1-260C-UNLIM	
TL084BCN	ACTIVE	PDIP	N	14	25	Pb-Free (RoHS)	CU NIPDAU	N / A for Pkg Type	
TL084BCNE4	ACTIVE	PDIP	N	14	25	Pb-Free (RoHS)	CU NIPDAU	N / A for Pkg Type	
TL084CD	ACTIVE	SOIC	D	14	50	Green (RoHS & no Sb/Br)	CU NIPDAU	Level-1-260C-UNLIM	
TL084CDE4	ACTIVE	SOIC	D	14	50	Green (RoHS & no Sb/Br)	CU NIPDAU	Level-1-260C-UNLIM	
TL084CDG4	ACTIVE	SOIC	D	14	50	Green (RoHS & no Sb/Br)	CU NIPDAU	Level-1-260C-UNLIM	
TL084CDR	ACTIVE	SOIC	D	14	2500	Green (RoHS & no Sb/Br)	CU NIPDAU	Level-1-260C-UNLIM	
TL084CDRE4	ACTIVE	SOIC	D	14	2500	Green (RoHS & no Sb/Br)	CU NIPDAU	Level-1-260C-UNLIM	

Orderable Device	Status (1)	Package Type	Package Drawing	Pins	Package Qty	Eco Plan (2)	Lead/ Ball Finish	MSL Peak Temp (3)	Samples (Requires Login)
TL084CDRG4	ACTIVE	SOIC	D	14	2500	Green (RoHS & no Sb/Br)	CU NIPDAU	Level-1-260C-UNLIM	
TL084CJ	OBSOLETE	CDIP	J	14		TBD	Call TI	Call TI	
TL084CN	ACTIVE	PDIP	N	14	25	Pb-Free (RoHS)	CU NIPDAU	N / A for Pkg Type	
TL084CNE4	ACTIVE	PDIP	N	14	25	Pb-Free (RoHS)	CU NIPDAU	N / A for Pkg Type	
TL084CNSLE	OBSOLETE	SO	NS	14		TBD	Call TI	Call TI	
TL084CNSR	ACTIVE	SO	NS	14	2000	Green (RoHS & no Sb/Br)	CU NIPDAU	Level-1-260C-UNLIM	
TL084CNSRG4	ACTIVE	SO	NS	14	2000	Green (RoHS & no Sb/Br)	CU NIPDAU	Level-1-260C-UNLIM	
TL084CPW	ACTIVE	TSSOP	PW	14	90	Green (RoHS & no Sb/Br)	CU NIPDAU	Level-1-260C-UNLIM	
TL084CPWE4	ACTIVE	TSSOP	PW	14	90	Green (RoHS & no Sb/Br)	CU NIPDAU	Level-1-260C-UNLIM	
TL084CPWG4	ACTIVE	TSSOP	PW	14	90	Green (RoHS & no Sb/Br)	CU NIPDAU	Level-1-260C-UNLIM	
TL084CPWLE	OBSOLETE	TSSOP	PW	14		TBD	Call TI	Call TI	
TL084CPWR	ACTIVE	TSSOP	PW	14	2000	Green (RoHS & no Sb/Br)	CU NIPDAU	Level-1-260C-UNLIM	
TL084CPWRE4	ACTIVE	TSSOP	PW	14	2000	Green (RoHS & no Sb/Br)	CU NIPDAU	Level-1-260C-UNLIM	
TL084CPWRG4	ACTIVE	TSSOP	PW	14	2000	Green (RoHS & no Sb/Br)	CU NIPDAU	Level-1-260C-UNLIM	
TL084ID	ACTIVE	SOIC	D	14	50	Green (RoHS & no Sb/Br)	CU NIPDAU	Level-1-260C-UNLIM	
TL084IDE4	ACTIVE	SOIC	D	14	50	Green (RoHS & no Sb/Br)	CU NIPDAU	Level-1-260C-UNLIM	
TL084IDG4	ACTIVE	SOIC	D	14	50	Green (RoHS & no Sb/Br)	CU NIPDAU	Level-1-260C-UNLIM	
TL084IDR	ACTIVE	SOIC	D	14	2500	Green (RoHS & no Sb/Br)	CU NIPDAU	Level-1-260C-UNLIM	
TL084IDRE4	ACTIVE	SOIC	D	14	2500	Green (RoHS & no Sb/Br)	CU NIPDAU	Level-1-260C-UNLIM	
TL084IDRG4	ACTIVE	SOIC	D	14	2500	Green (RoHS & no Sb/Br)	CU NIPDAU	Level-1-260C-UNLIM	

Orderable Device	Status (1)	Package Type	Package Drawing	Pins	Package Qty	Eco Plan (2)	Lead/ Ball Finish	MSL Peak Temp (3)	Samples (Requires Login)
TL084IJ	OBSOLETE	CDIP	J	14		TBD	Call TI	Call TI	
TL084IN	ACTIVE	PDIP	N	14	25	Pb-Free (RoHS)	CU NIPDAU	N / A for Pkg Type	
TL084INE4	ACTIVE	PDIP	N	14	25	Pb-Free (RoHS)	CU NIPDAU	N / A for Pkg Type	
TL084MFK	ACTIVE	LCCC	FK	20	1	TBD	POST-PLATE	N / A for Pkg Type	
TL084MFKB	ACTIVE	LCCC	FK	20	1	TBD	POST-PLATE	N / A for Pkg Type	
TL084MJ	ACTIVE	CDIP	J	14	1	TBD	A42	N / A for Pkg Type	
TL084MJB	ACTIVE	CDIP	J	14	1	TBD	A42	N / A for Pkg Type	
TL084QD	ACTIVE	SOIC	D	14	50	Green (RoHS & no Sb/Br)	CU NIPDAU	Level-1-260C-UNLIM	
TL084QDG4	ACTIVE	SOIC	D	14	50	Green (RoHS & no Sb/Br)	CU NIPDAU	Level-1-260C-UNLIM	
TL084QDR	ACTIVE	SOIC	D	14	2500	Green (RoHS & no Sb/Br)	CU NIPDAU	Level-1-260C-UNLIM	
TL084QDRG4	ACTIVE	SOIC	D	14	2500	Green (RoHS & no Sb/Br)	CU NIPDAU	Level-1-260C-UNLIM	

(1) The marketing status values are defined as follows:
ACTIVE: Product device recommended for new designs.
LIFEBUY: TI has announced that the device will be discontinued, and a lifetime-buy period is in effect.
NRND: Not recommended for new designs. Device is in production to support existing customers, but TI does not recommend using this part in a new design.
PREVIEW: Device has been announced but is not in production. Samples may or may not be available.
OBSOLETE: TI has discontinued the production of the device.

(2) Eco Plan - The planned eco-friendly classification: Pb-Free (RoHS), Pb-Free (RoHS Exempt), or Green (RoHS & no Sb/Br) - please check http://www.ti.com/productcontent for the latest availability information and additional product content details.
TBD: The Pb-Free/Green conversion plan has not been defined.
Pb-Free (RoHS): TI's terms "Lead-Free" or "Pb-Free" mean semiconductor products that are compatible with the current RoHS requirements for all 6 substances, including the requirement that lead not exceed 0.1% by weight in homogeneous materials. Where designed to be soldered at high temperatures, TI Pb-Free products are suitable for use in specified lead-free processes.
Pb-Free (RoHS Exempt): This component has a RoHS exemption for either 1) lead-based flip-chip solder bumps used between the die and package, or 2) lead-based die adhesive used between the die and leadframe. The component is otherwise considered Pb-Free (RoHS compatible) as defined above.
Green (RoHS & no Sb/Br): TI defines "Green" to mean Pb-Free (RoHS compatible), and free of Bromine (Br) and Antimony (Sb) based flame retardants (Br or Sb do not exceed 0.1% by weight in homogeneous material)

(3) MSL, Peak Temp. -- The Moisture Sensitivity Level rating according to the JEDEC industry standard classifications, and peak solder temperature.

Important Information and Disclaimer: The information provided on this page represents TI's knowledge and belief as of the date that it is provided. TI bases its knowledge and belief on information provided by third parties, and makes no representation or warranty as to the accuracy of such information. Efforts are underway to better integrate information from third parties. TI has taken and

continues to take reasonable steps to provide representative and accurate information but may not have conducted destructive testing or chemical analysis on incoming materials and chemicals. TI and TI suppliers consider certain information to be proprietary, and thus CAS numbers and other limited information may not be available for release.

In no event shall TI's liability arising out of such information exceed the total purchase price of the TI part(s) at issue in this document sold by TI to Customer on an annual basis.

OTHER QUALIFIED VERSIONS OF TL082, TL082M, TL084, TL084M :

- Catalog: TL082, TL084
- Automotive: TL082-Q1, TL082-Q1
- Military: TL082M, TL084M

NOTE: Qualified Version Definitions:

- Catalog - TI's standard catalog product
- Automotive - Q100 devices qualified for high-reliability automotive applications targeting zero defects
- Military - QML certified for Military and Defense Applications

TAPE AND REEL INFORMATION

REEL DIMENSIONS

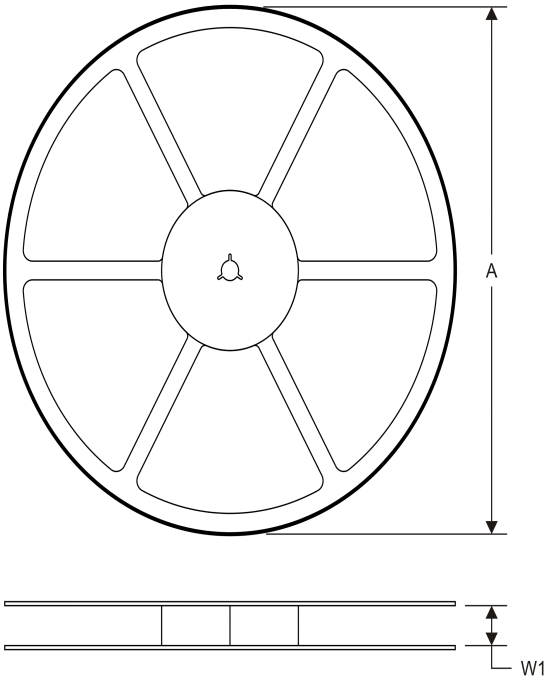

TAPE DIMENSIONS

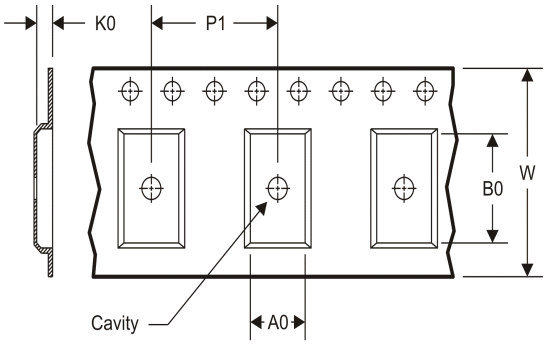

A0	Dimension designed to accommodate the component width
B0	Dimension designed to accommodate the component length
K0	Dimension designed to accommodate the component thickness
W	Overall width of the carrier tape
P1	Pitch between successive cavity centers

TAPE AND REEL INFORMATION

*All dimensions are nominal

Device	Package Type	Package Drawing	Pins	SPQ	Reel Diameter (mm)	Reel Width W1 (mm)	A0 (mm)	B0 (mm)	K0 (mm)	P1 (mm)	W (mm)	Pin1 Quadrant
TL081ACDR	SOIC	D	8	2500	330.0	12.4	6.4	5.2	2.1	8.0	12.0	Q1
TL081BCDR	SOIC	D	8	2500	330.0	12.4	6.4	5.2	2.1	8.0	12.0	Q1
TL081CDR	SOIC	D	8	2500	330.0	12.4	6.4	5.2	2.1	8.0	12.0	Q1
TL081CPSR	SO	PS	8	2000	330.0	16.4	8.2	6.6	2.5	12.0	16.0	Q1
TL081IDR	SOIC	D	8	2500	330.0	12.4	6.4	5.2	2.1	8.0	12.0	Q1
TL082ACDR	SOIC	D	8	2500	330.0	12.4	6.4	5.2	2.1	8.0	12.0	Q1
TL082ACDR	SOIC	D	8	2500	330.0	12.4	6.4	5.2	2.1	8.0	12.0	Q1
TL082ACPSR	SO	PS	8	2000	330.0	16.4	8.2	6.6	2.5	12.0	16.0	Q1
TL082BCDR	SOIC	D	8	2500	330.0	12.4	6.4	5.2	2.1	8.0	12.0	Q1
TL082CDR	SOIC	D	8	2500	330.0	12.4	6.4	5.2	2.1	8.0	12.0	Q1
TL082CDR	SOIC	D	8	2500	330.0	12.4	6.4	5.2	2.1	8.0	12.0	Q1
TL082CPSR	SO	PS	8	2000	330.0	16.4	8.2	6.6	2.5	12.0	16.0	Q1
TL082CPWR	TSSOP	PW	8	2000	330.0	12.4	7.0	3.6	1.6	8.0	12.0	Q1
TL082IDR	SOIC	D	8	2500	330.0	12.4	6.4	5.2	2.1	8.0	12.0	Q1
TL082IDR	SOIC	D	8	2500	330.0	12.4	6.4	5.2	2.1	8.0	12.0	Q1
TL082IPWR	TSSOP	PW	8	2000	330.0	12.4	7.0	3.6	1.6	8.0	12.0	Q1
TL084ACDR	SOIC	D	14	2500	330.0	16.4	6.5	9.0	2.1	8.0	16.0	Q1
TL084ACDR	SOIC	D	14	2500	330.0	16.4	6.5	9.0	2.1	8.0	16.0	Q1

Device	Package Type	Package Drawing	Pins	SPQ	Reel Diameter (mm)	Reel Width W1 (mm)	A0 (mm)	B0 (mm)	K0 (mm)	P1 (mm)	W (mm)	Pin1 Quadrant
TL084ACNSR	SO	NS	14	2000	330.0	16.4	8.2	10.5	2.5	12.0	16.0	Q1
TL084BCDR	SOIC	D	14	2500	330.0	16.4	6.5	9.0	2.1	8.0	16.0	Q1
TL084CDR	SOIC	D	14	2500	330.0	16.4	6.5	9.0	2.1	8.0	16.0	Q1
TL084CNSR	SO	NS	14	2000	330.0	16.4	8.2	10.5	2.5	12.0	16.0	Q1
TL084CPWR	TSSOP	PW	14	2000	330.0	12.4	6.9	5.6	1.6	8.0	12.0	Q1
TL084IDR	SOIC	D	14	2500	330.0	16.4	6.5	9.0	2.1	8.0	16.0	Q1
TL084QDR	SOIC	D	14	2500	330.0	16.4	6.5	9.0	2.1	8.0	16.0	Q1

TAPE AND REEL BOX DIMENSIONS

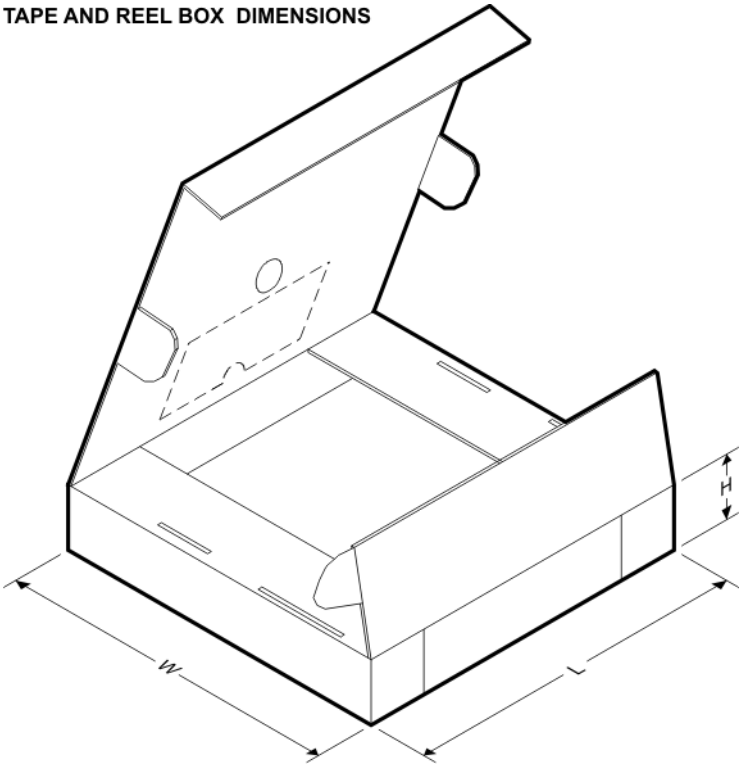

*All dimensions are nominal

Device	Package Type	Package Drawing	Pins	SPQ	Length (mm)	Width (mm)	Height (mm)
TL081ACDR	SOIC	D	8	2500	340.5	338.1	20.6
TL081BCDR	SOIC	D	8	2500	340.5	338.1	20.6
TL081CDR	SOIC	D	8	2500	340.5	338.1	20.6
TL081CPSR	SO	PS	8	2000	367.0	367.0	38.0
TL081IDR	SOIC	D	8	2500	340.5	338.1	20.6
TL082ACDR	SOIC	D	8	2500	340.5	338.1	20.6
TL082ACDR	SOIC	D	8	2500	367.0	367.0	35.0
TL082ACPSR	SO	PS	8	2000	367.0	367.0	38.0
TL082BCDR	SOIC	D	8	2500	340.5	338.1	20.6
TL082CDR	SOIC	D	8	2500	340.5	338.1	20.6

Device	Package Type	Package Drawing	Pins	SPQ	Length (mm)	Width (mm)	Height (mm)
TL082CDR	SOIC	D	8	2500	367.0	367.0	35.0
TL082CPSR	SO	PS	8	2000	367.0	367.0	38.0
TL082CPWR	TSSOP	PW	8	2000	367.0	367.0	35.0
TL082IDR	SOIC	D	8	2500	367.0	367.0	35.0
TL082IDR	SOIC	D	8	2500	340.5	338.1	20.6
TL082IPWR	TSSOP	PW	8	2000	367.0	367.0	35.0
TL084ACDR	SOIC	D	14	2500	333.2	345.9	28.6
TL084ACDR	SOIC	D	14	2500	367.0	367.0	38.0
TL084ACNSR	SO	NS	14	2000	367.0	367.0	38.0
TL084BCDR	SOIC	D	14	2500	333.2	345.9	28.6
TL084CDR	SOIC	D	14	2500	333.2	345.9	28.6
TL084CNSR	SO	NS	14	2000	367.0	367.0	38.0
TL084CPWR	TSSOP	PW	14	2000	367.0	367.0	35.0
TL084IDR	SOIC	D	14	2500	333.2	345.9	28.6
TL084QDR	SOIC	D	14	2500	367.0	367.0	38.0

JG (R-GDIP-T8) **CERAMIC DUAL-IN-LINE**

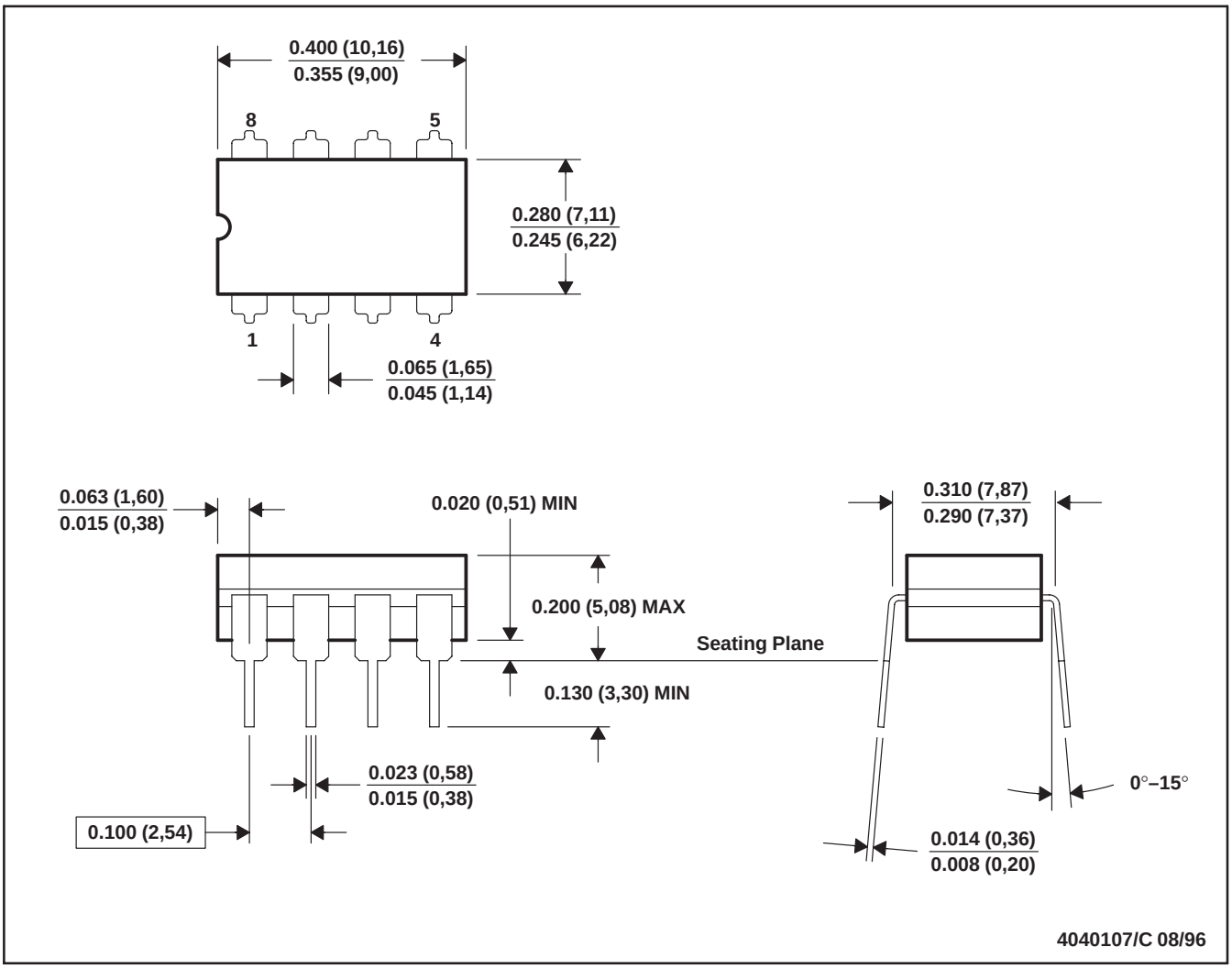

NOTES: A. All linear dimensions are in inches (millimeters).
B. This drawing is subject to change without notice.
C. This package can be hermetically sealed with a ceramic lid using glass frit.
D. Index point is provided on cap for terminal identification.
E. Falls within MIL STD 1835 GDIP1-T8

J (R–GDIP–T**) CERAMIC DUAL IN–LINE PACKAGE

14 LEADS SHOWN

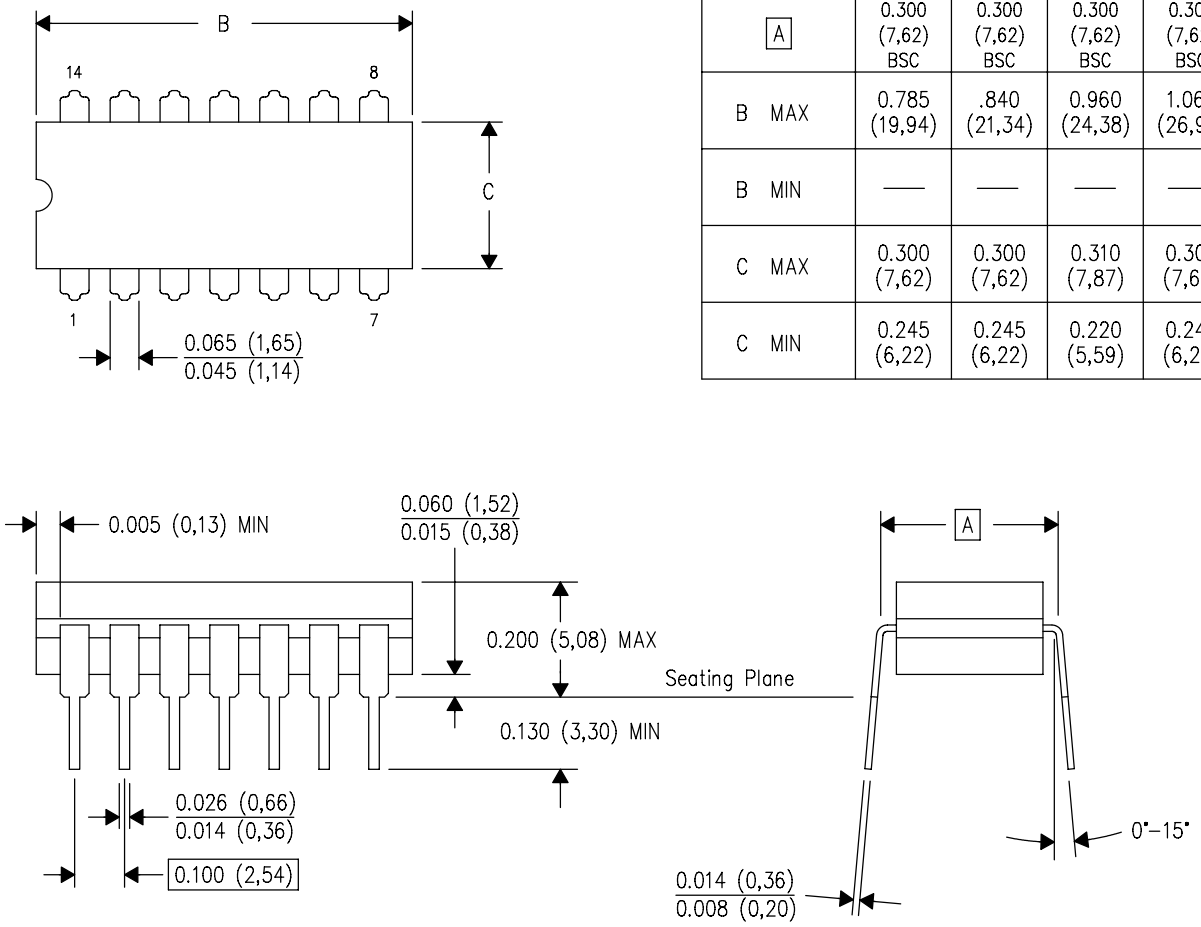

DIM \ PINS **	14	16	18	20
A	0.300 (7,62) BSC	0.300 (7,62) BSC	0.300 (7,62) BSC	0.300 (7,62) BSC
B MAX	0.785 (19,94)	.840 (21,34)	0.960 (24,38)	1.060 (26,92)
B MIN	—	—	—	—
C MAX	0.300 (7,62)	0.300 (7,62)	0.310 (7,87)	0.300 (7,62)
C MIN	0.245 (6,22)	0.245 (6,22)	0.220 (5,59)	0.245 (6,22)

4040083/F 03/03

NOTES:
- A. All linear dimensions are in inches (millimeters).
- B. This drawing is subject to change without notice.
- C. This package is hermetically sealed with a ceramic lid using glass frit.
- D. Index point is provided on cap for terminal identification only on press ceramic glass frit seal only.
- E. Falls within MIL STD 1835 GDIP1–T14, GDIP1–T16, GDIP1–T18 and GDIP1–T20.

FK (S–CQCC–N**) LEADLESS CERAMIC CHIP CARRIER

28 TERMINAL SHOWN

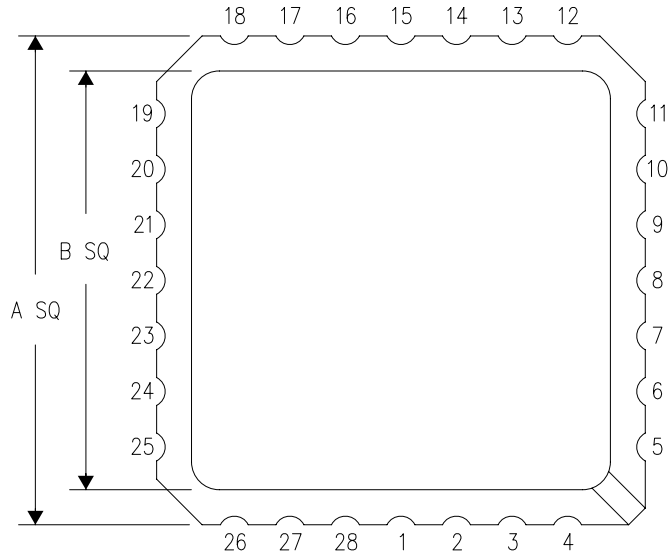

NO. OF TERMINALS **	A		B	
	MIN	MAX	MIN	MAX
20	0.342 (8,69)	0.358 (9,09)	0.307 (7,80)	0.358 (9,09)
28	0.442 (11,23)	0.458 (11,63)	0.406 (10,31)	0.458 (11,63)
44	0.640 (16,26)	0.660 (16,76)	0.495 (12,58)	0.560 (14,22)
52	0.740 (18,78)	0.761 (19,32)	0.495 (12,58)	0.560 (14,22)
68	0.938 (23,83)	0.962 (24,43)	0.850 (21,6)	0.858 (21,8)
84	1.141 (28,99)	1.165 (29,59)	1.047 (26,6)	1.063 (27,0)

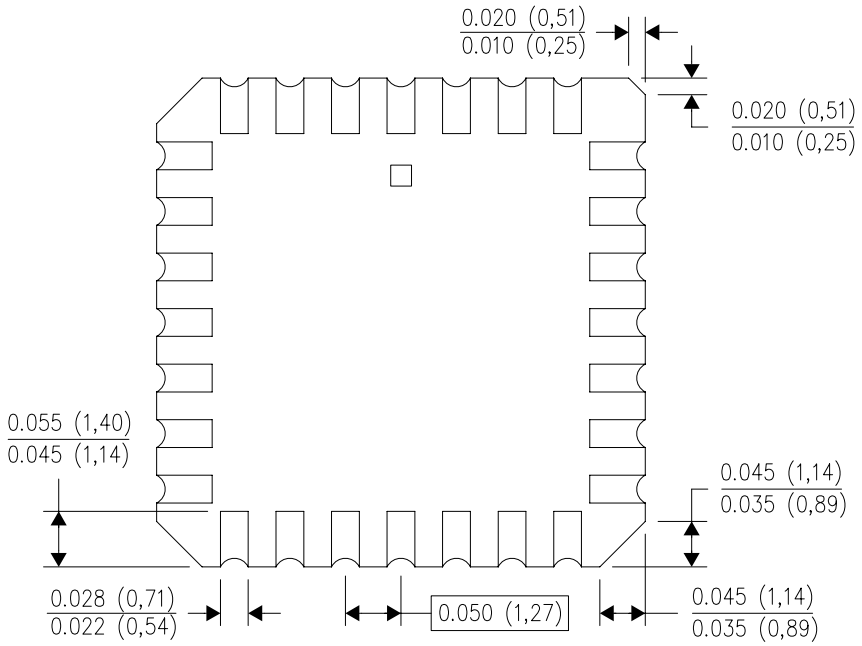

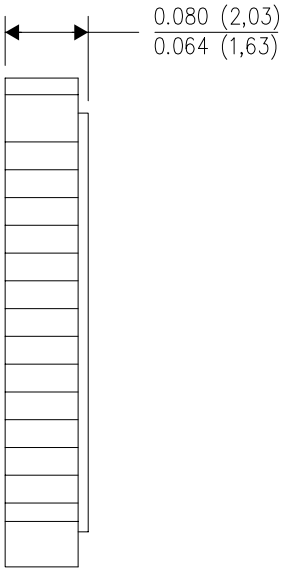

4040140/D 01/11

NOTES:
A. All linear dimensions are in inches (millimeters).
B. This drawing is subject to change without notice.
C. This package can be hermetically sealed with a metal lid.
D. Falls within JEDEC MS–004

P (R–PDIP–T8) PLASTIC DUAL–IN–LINE PACKAGE

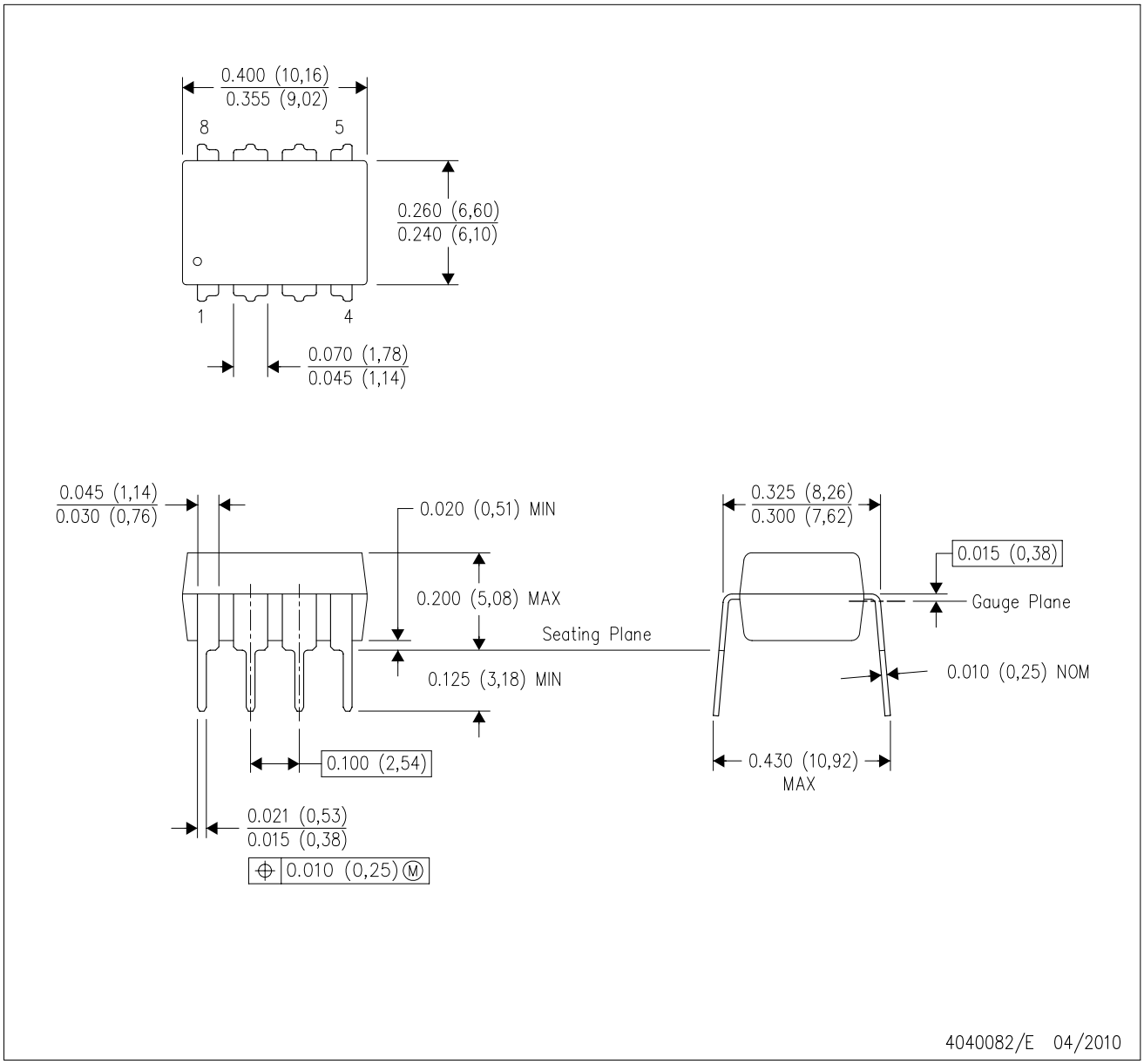

NOTES:
A. All linear dimensions are in inches (millimeters).
B. This drawing is subject to change without notice.
C. Falls within JEDEC MS–001 variation BA.

N (R–PDIP–T**) PLASTIC DUAL–IN–LINE PACKAGE

16 PINS SHOWN

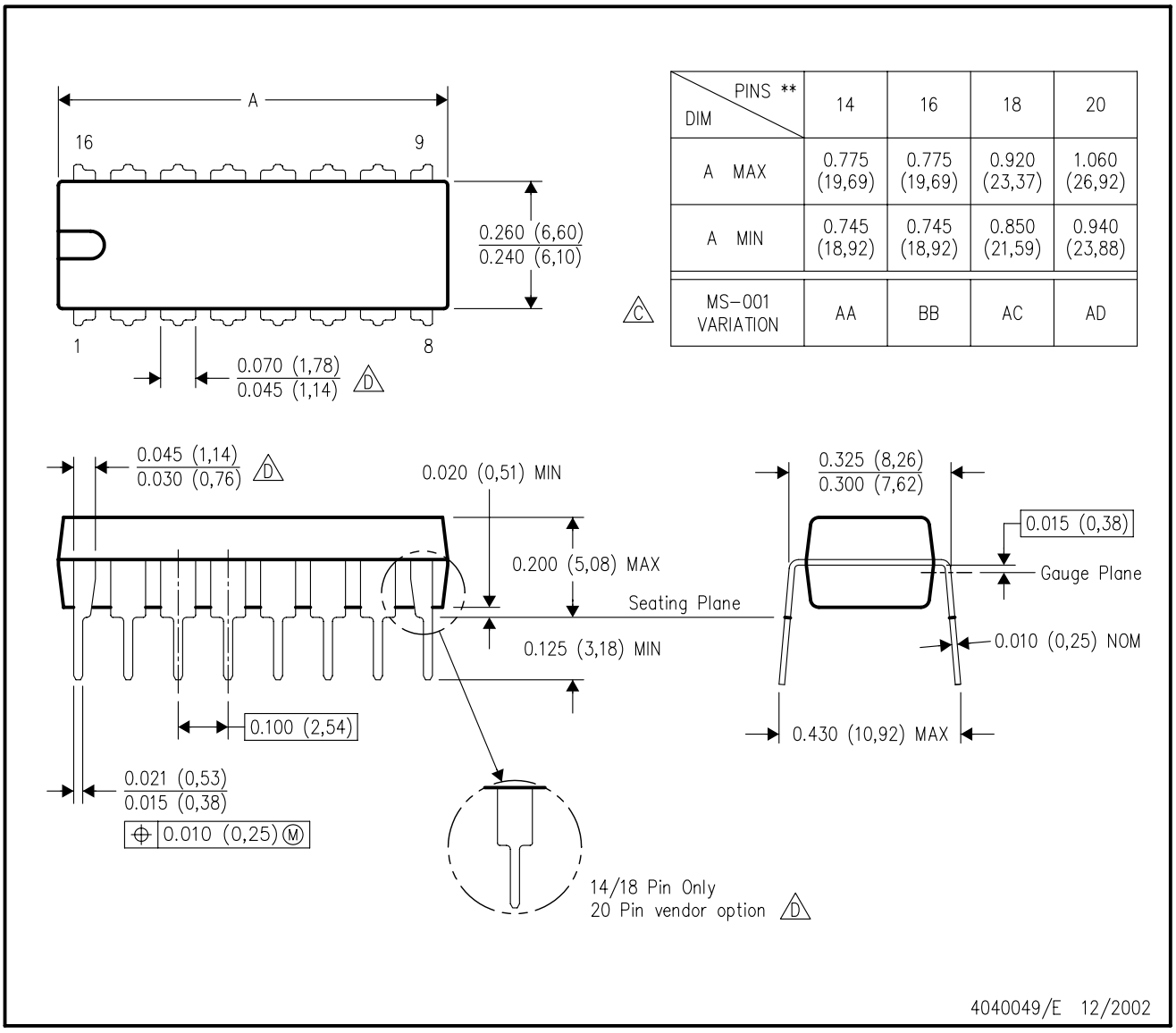

DIM \ PINS **	14	16	18	20
A MAX	0.775 (19,69)	0.775 (19,69)	0.920 (23,37)	1.060 (26,92)
A MIN	0.745 (18,92)	0.745 (18,92)	0.850 (21,59)	0.940 (23,88)
MS–001 VARIATION (C)	AA	BB	AC	AD

NOTES:
A. All linear dimensions are in inches (millimeters).
B. This drawing is subject to change without notice.
C. Falls within JEDEC MS–001, except 18 and 20 pin minimum body length (Dim A).
D. The 20 pin end lead shoulder width is a vendor option, either half or full width.

D (R–PDSO–G14) PLASTIC SMALL OUTLINE

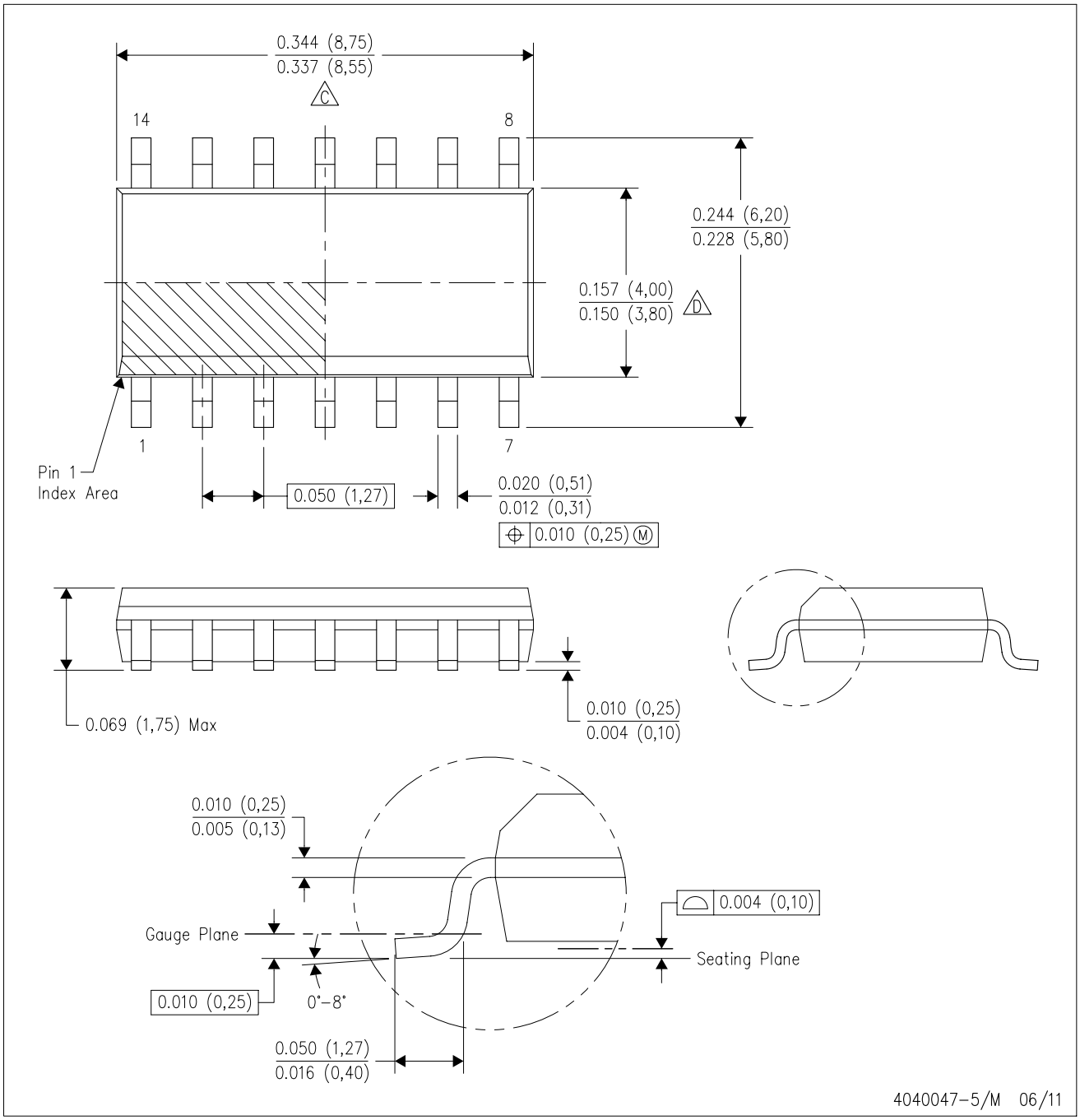

NOTES:
A. All linear dimensions are in inches (millimeters).
B. This drawing is subject to change without notice.
C. Body length does not include mold flash, protrusions, or gate burrs. Mold flash, protrusions, or gate burrs shall not exceed 0.006 (0,15) each side.
D. Body width does not include interlead flash. Interlead flash shall not exceed 0.017 (0,43) each side.
E. Reference JEDEC MS–012 variation AB.

D (R–PDSO–G14) PLASTIC SMALL OUTLINE

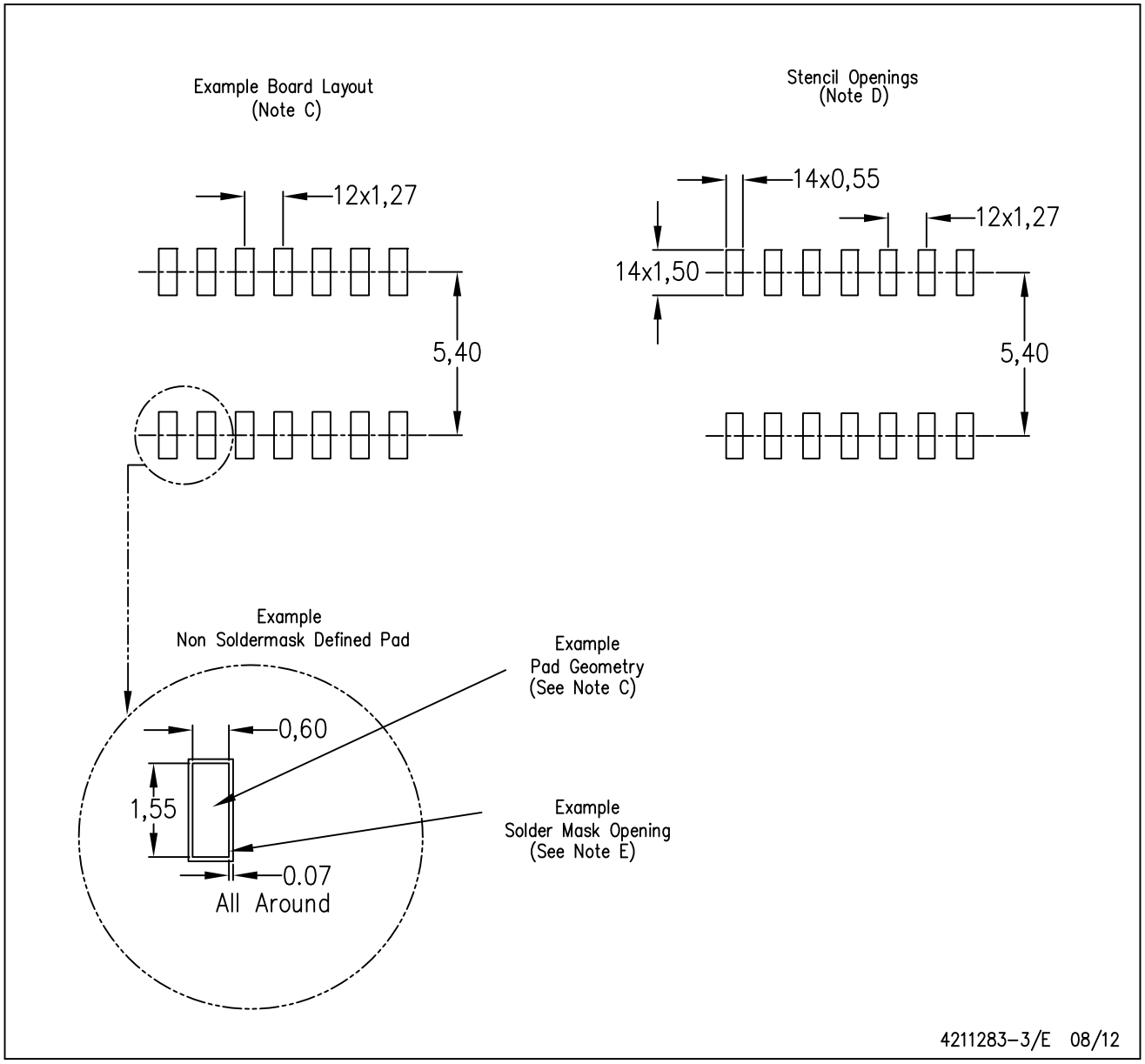

NOTES:
A. All linear dimensions are in millimeters.
B. This drawing is subject to change without notice.
C. Publication IPC–7351 is recommended for alternate designs.
D. Laser cutting apertures with trapezoidal walls and also rounding corners will offer better paste release. Customers should contact their board assembly site for stencil design recommendations. Refer to IPC–7525 for other stencil recommendations.
E. Customers should contact their board fabrication site for solder mask tolerances between and around signal pads.

PW (R–PDSO–G14) PLASTIC SMALL OUTLINE

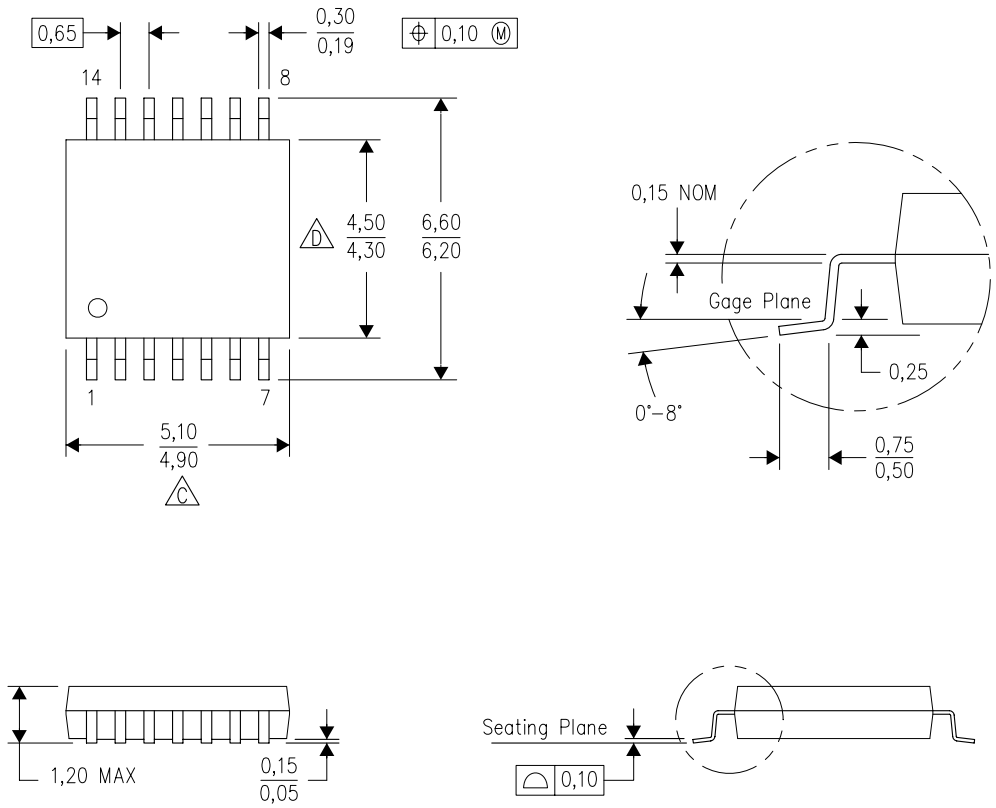

NOTES:
A. All linear dimensions are in millimeters. Dimensioning and tolerancing per ASME Y14.5M–1994.
B. This drawing is subject to change without notice.
C. Body length does not include mold flash, protrusions, or gate burrs. Mold flash, protrusions, or gate burrs shall not exceed 0,15 each side.
D. Body width does not include interlead flash. Interlead flash shall not exceed 0,25 each side.
E. Falls within JEDEC MO–153

PW (R–PDSO–G14) PLASTIC SMALL OUTLINE

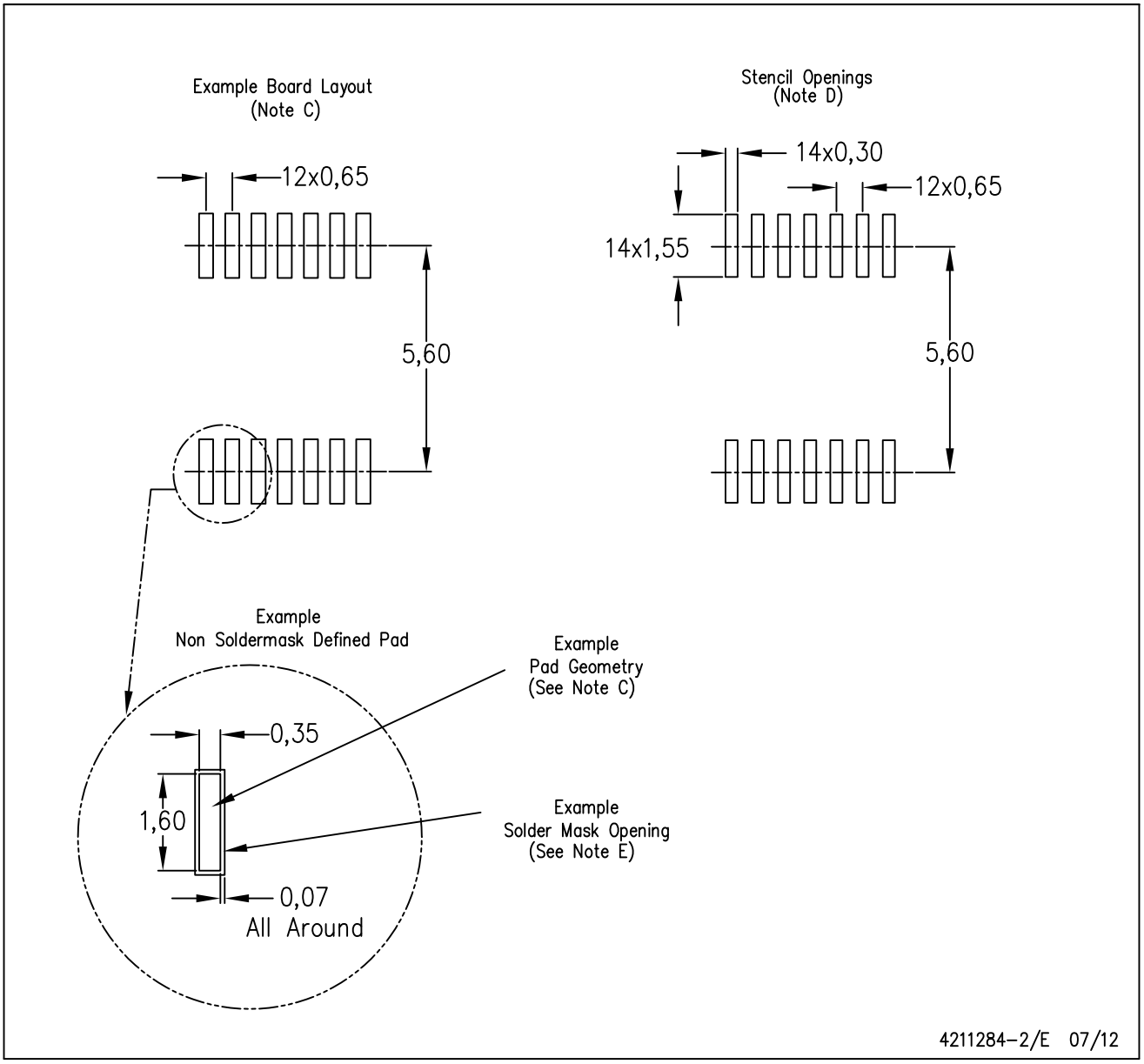

NOTES:
A. All linear dimensions are in millimeters.
B. This drawing is subject to change without notice.
C. Publication IPC–7351 is recommended for alternate designs.
D. Laser cutting apertures with trapezoidal walls and also rounding corners will offer better paste release. Customers should contact their board assembly site for stencil design recommendations. Refer to IPC–7525 for other stencil recommendations.
E. Customers should contact their board fabrication site for solder mask tolerances between and around signal pads.

D (R–PDSO–G8) PLASTIC SMALL OUTLINE

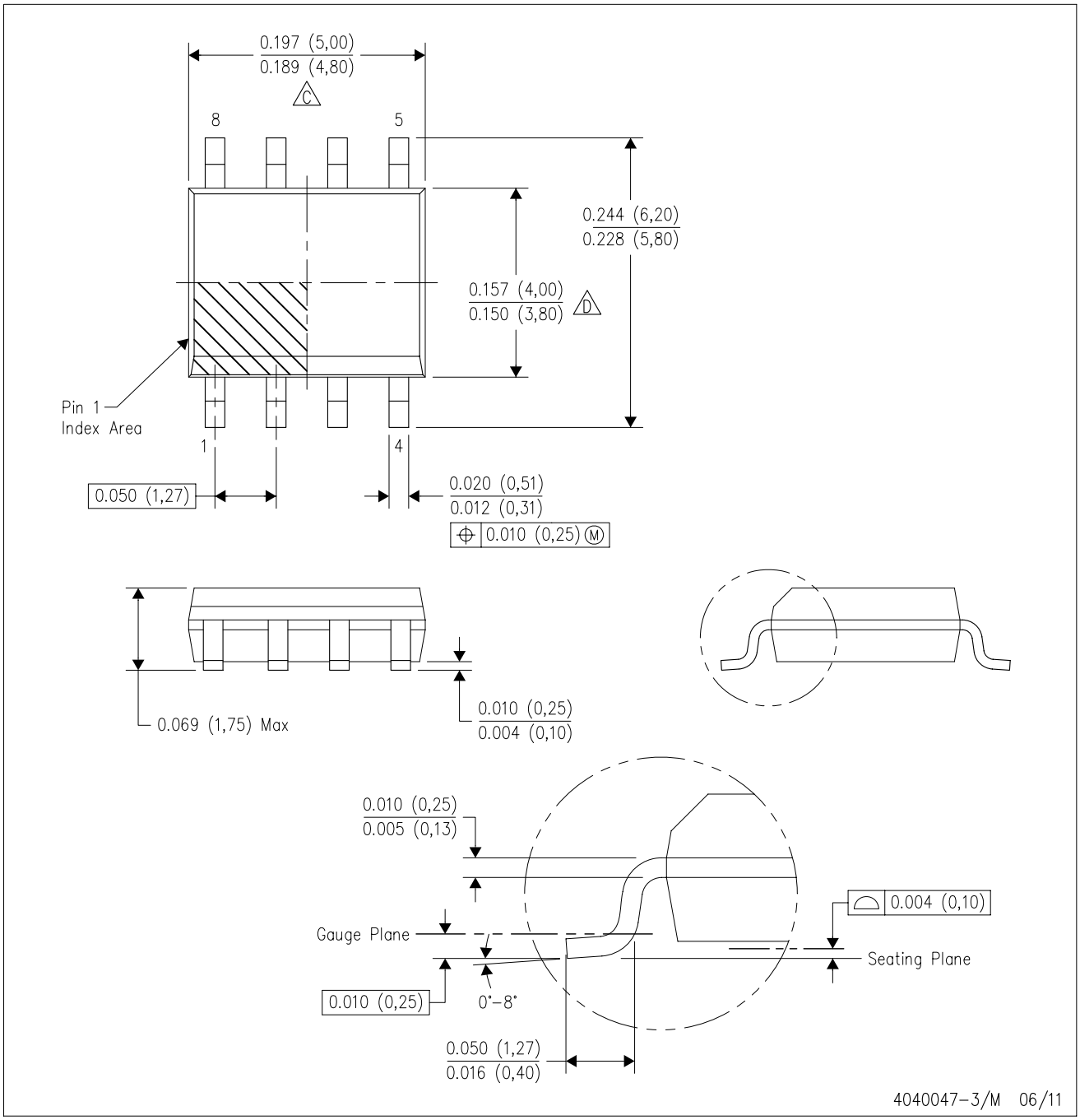

NOTES:
A. All linear dimensions are in inches (millimeters).
B. This drawing is subject to change without notice.
C. Body length does not include mold flash, protrusions, or gate burrs. Mold flash, protrusions, or gate burrs shall not exceed 0.006 (0,15) each side.
D. Body width does not include interlead flash. Interlead flash shall not exceed 0.017 (0,43) each side.
E. Reference JEDEC MS–012 variation AA.

D (R–PDSO–G8) PLASTIC SMALL OUTLINE

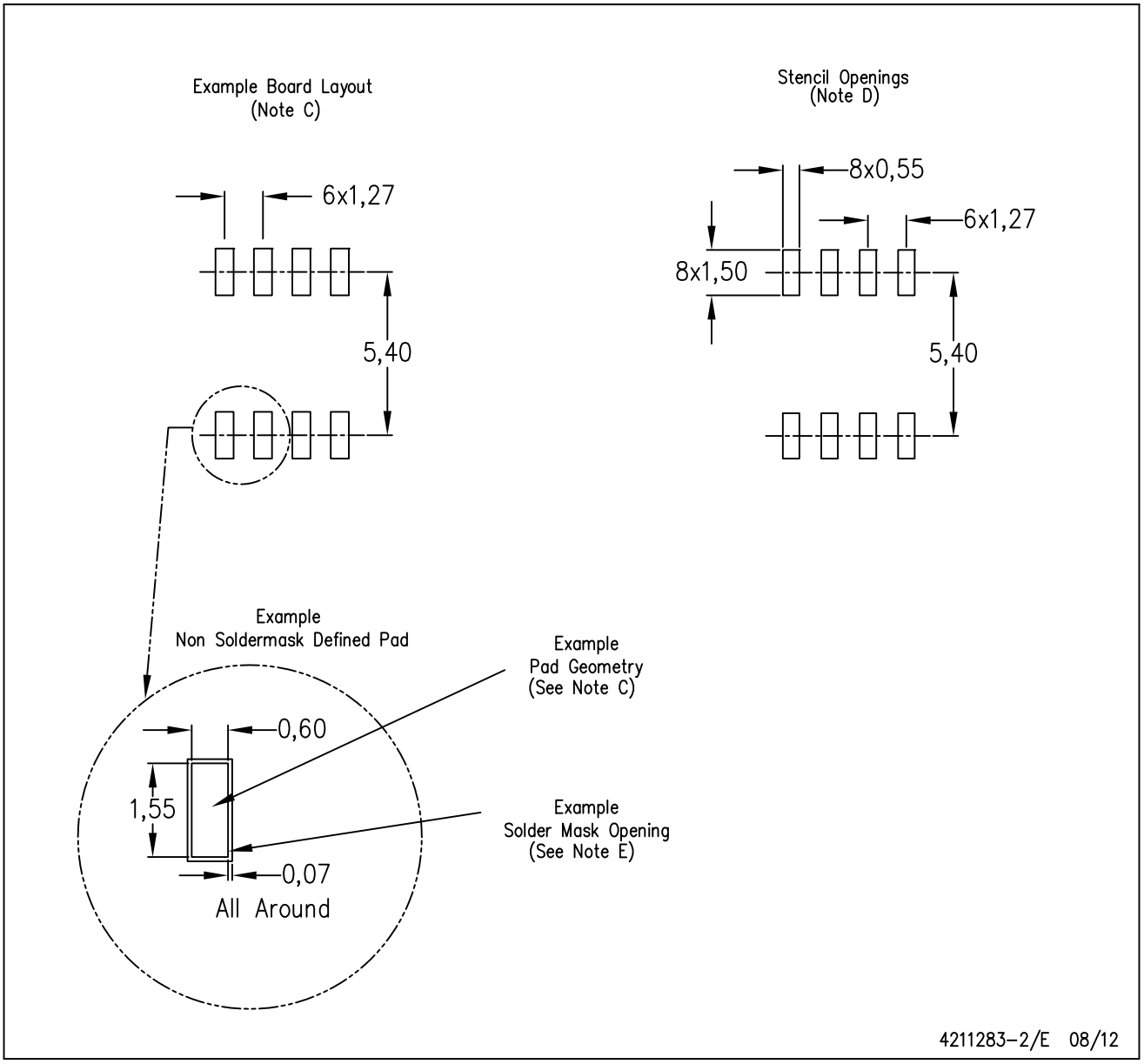

NOTES:
A. All linear dimensions are in millimeters.
B. This drawing is subject to change without notice.
C. Publication IPC–7351 is recommended for alternate designs.
D. Laser cutting apertures with trapezoidal walls and also rounding corners will offer better paste release. Customers should contact their board assembly site for stencil design recommendations. Refer to IPC–7525 for other stencil recommendations.
E. Customers should contact their board fabrication site for solder mask tolerances between and around signal pads.

MECHANICAL DATA

PS (R-PDSO-G8) **PLASTIC SMALL-OUTLINE PACKAGE**

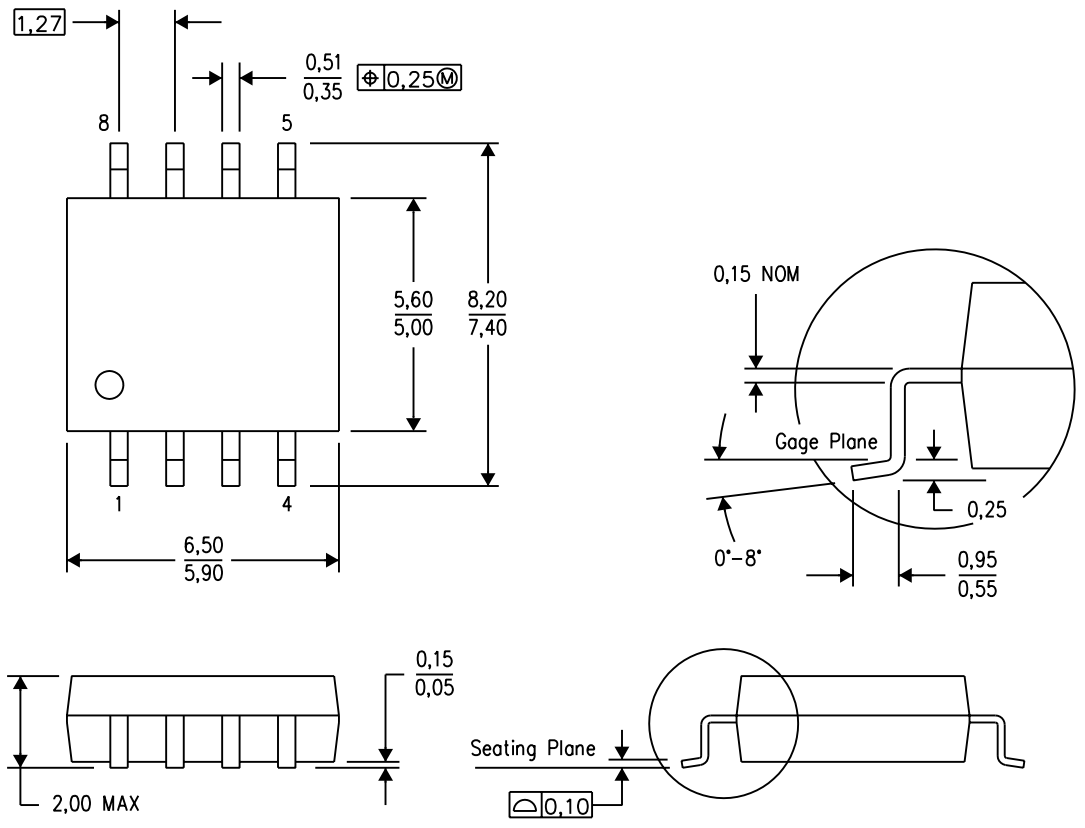

NOTES:
A. All linear dimensions are in millimeters.
B. This drawing is subject to change without notice.
C. Body dimensions do not include mold flash or protrusion, not to exceed 0,15.

PS (R-PDSO-G8) PLASTIC SMALL OUTLINE

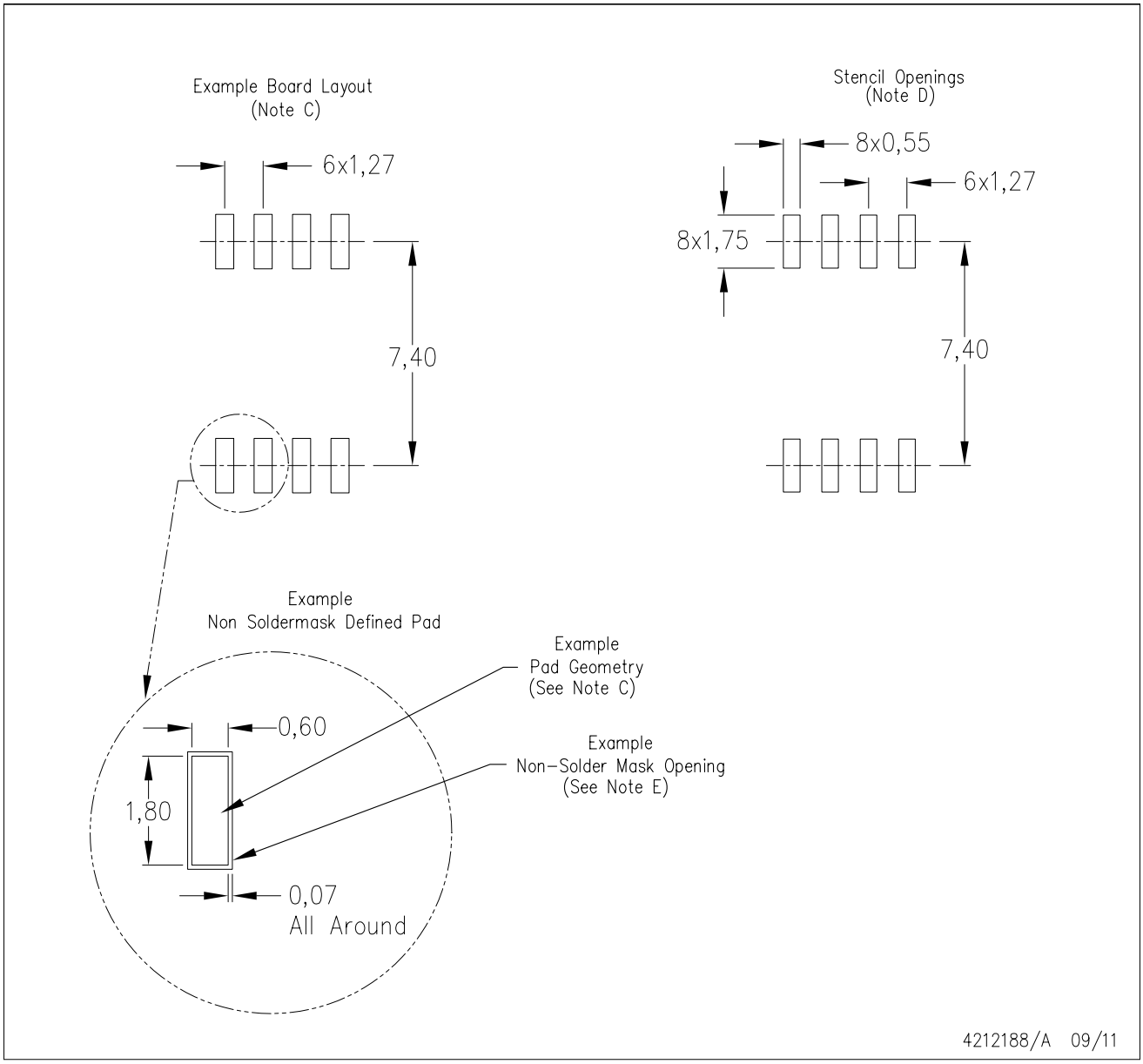

NOTES:
A. All linear dimensions are in millimeters.
B. This drawing is subject to change without notice.
C. Publication IPC-7351 is recommended for alternate designs.
D. Laser cutting apertures with trapezoidal walls and also rounding corners will offer better paste release. Customers should contact their board assembly site for stencil design recommendations. Refer to IPC-7525 for other stencil recommendations.
E. Customers should contact their board fabrication site for solder mask tolerances between and around signal pads.

MECHANICAL DATA

NS (R-PDSO-G)** **PLASTIC SMALL-OUTLINE PACKAGE**

14-PINS SHOWN

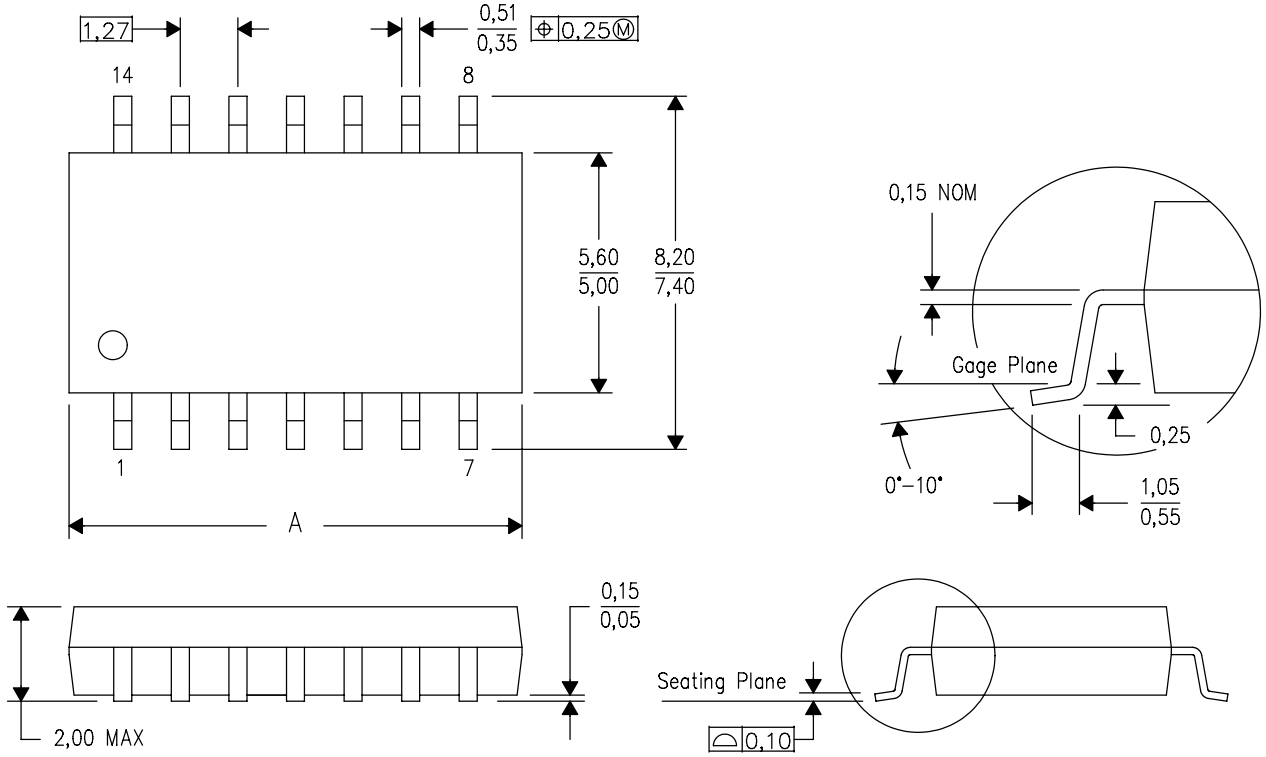

DIM \ PINS **	14	16	20	24
A MAX	10,50	10,50	12,90	15,30
A MIN	9,90	9,90	12,30	14,70

4040062/C 03/03

NOTES:
A. All linear dimensions are in millimeters.
B. This drawing is subject to change without notice.
C. Body dimensions do not include mold flash or protrusion, not to exceed 0,15.

PW (R-PDSO-G8) PLASTIC SMALL OUTLINE

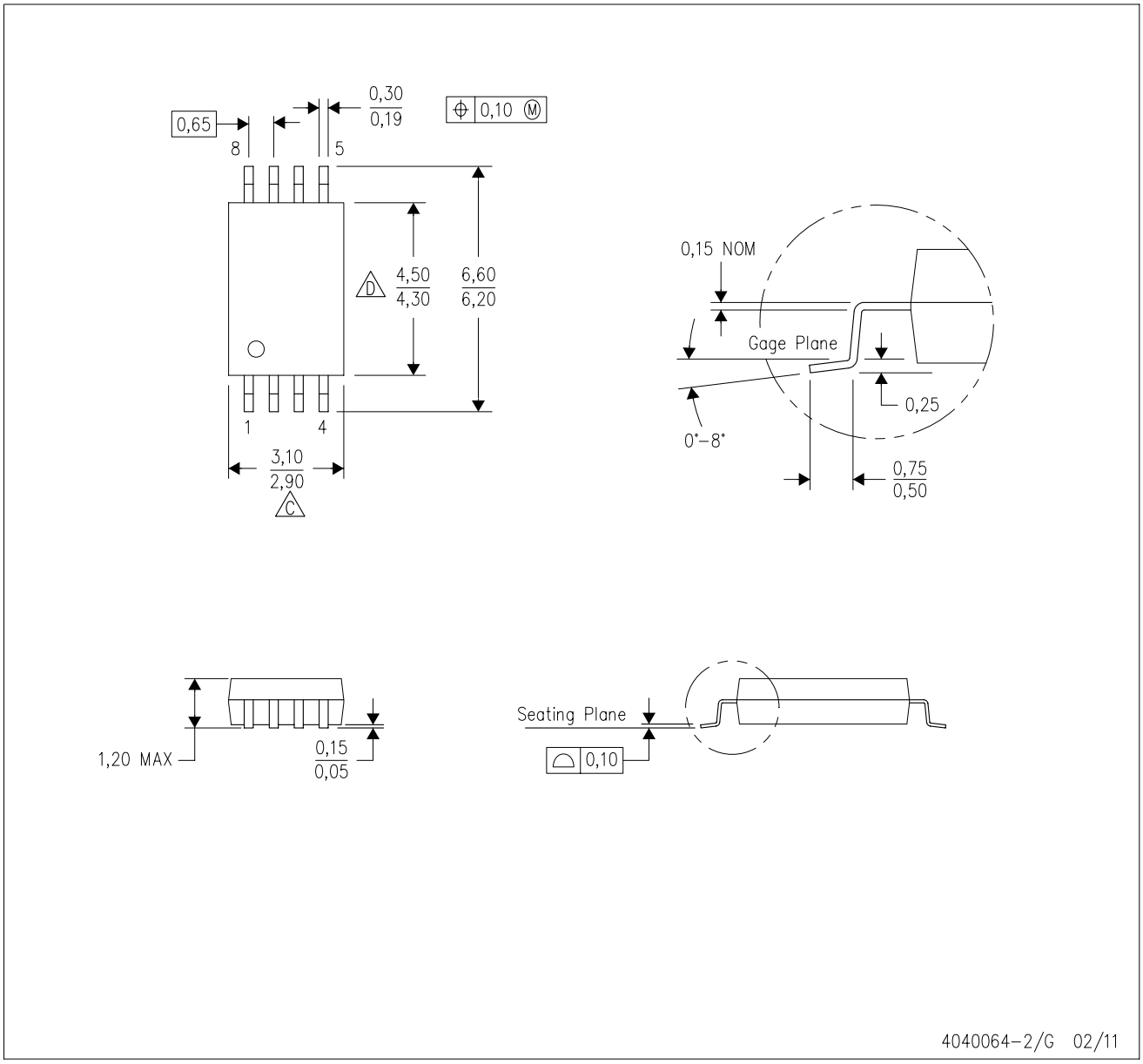

NOTES:
A. All linear dimensions are in millimeters. Dimensioning and tolerancing per ASME Y14.5M-1994.
B. This drawing is subject to change without notice.
C. Body length does not include mold flash, protrusions, or gate burrs. Mold flash, protrusions, or gate burrs shall not exceed 0,15 each side.
D. Body width does not include interlead flash. Interlead flash shall not exceed 0,25 each side.
E. Falls within JEDEC MO-153

IMPORTANT NOTICE

Texas Instruments Incorporated and its subsidiaries (TI) reserve the right to make corrections, enhancements, improvements and other changes to its semiconductor products and services per JESD46C and to discontinue any product or service per JESD48B. Buyers should obtain the latest relevant information before placing orders and should verify that such information is current and complete. All semiconductor products (also referred to herein as “components”) are sold subject to TI’s terms and conditions of sale supplied at the time of order acknowledgment.

TI warrants performance of its components to the specifications applicable at the time of sale, in accordance with the warranty in TI’s terms and conditions of sale of semiconductor products. Testing and other quality control techniques are used to the extent TI deems necessary to support this warranty. Except where mandated by applicable law, testing of all parameters of each component is not necessarily performed.

TI assumes no liability for applications assistance or the design of Buyers’ products. Buyers are responsible for their products and applications using TI components. To minimize the risks associated with Buyers’ products and applications, Buyers should provide adequate design and operating safeguards.

TI does not warrant or represent that any license, either express or implied, is granted under any patent right, copyright, mask work right, or other intellectual property right relating to any combination, machine, or process in which TI components or services are used. Information published by TI regarding third-party products or services does not constitute a license to use such products or services or a warranty or endorsement thereof. Use of such information may require a license from a third party under the patents or other intellectual property of the third party, or a license from TI under the patents or other intellectual property of TI.

Reproduction of significant portions of TI information in TI data books or data sheets is permissible only if reproduction is without alteration and is accompanied by all associated warranties, conditions, limitations, and notices. TI is not responsible or liable for such altered documentation. Information of third parties may be subject to additional restrictions.

Resale of TI components or services with statements different from or beyond the parameters stated by TI for that component or service voids all express and any implied warranties for the associated TI component or service and is an unfair and deceptive business practice. TI is not responsible or liable for any such statements.

Buyer acknowledges and agrees that it is solely responsible for compliance with all legal, regulatory and safety-related requirements concerning its products, and any use of TI components in its applications, notwithstanding any applications-related information or support that may be provided by TI. Buyer represents and agrees that it has all the necessary expertise to create and implement safeguards which anticipate dangerous consequences of failures, monitor failures and their consequences, lessen the likelihood of failures that might cause harm and take appropriate remedial actions. Buyer will fully indemnify TI and its representatives against any damages arising out of the use of any TI components in safety-critical applications.

In some cases, TI components may be promoted specifically to facilitate safety-related applications. With such components, TI’s goal is to help enable customers to design and create their own end-product solutions that meet applicable functional safety standards and requirements. Nonetheless, such components are subject to these terms.

No TI components are authorized for use in FDA Class III (or similar life-critical medical equipment) unless authorized officers of the parties have executed a special agreement specifically governing such use.

Only those TI components which TI has specifically designated as military grade or “enhanced plastic” are designed and intended for use in military/aerospace applications or environments. Buyer acknowledges and agrees that any military or aerospace use of TI components which have ***not*** been so designated is solely at the Buyer's risk, and that Buyer is solely responsible for compliance with all legal and regulatory requirements in connection with such use.

TI has specifically designated certain components which meet ISO/TS16949 requirements, mainly for automotive use. Components which have not been so designated are neither designed nor intended for automotive use; and TI will not be responsible for any failure of such components to meet such requirements.

Products		**Applications**	
Audio	www.ti.com/audio	Automotive and Transportation	www.ti.com/automotive
Amplifiers	amplifier.ti.com	Communications and Telecom	www.ti.com/communications
Data Converters	dataconverter.ti.com	Computers and Peripherals	www.ti.com/computers
DLP® Products	www.dlp.com	Consumer Electronics	www.ti.com/consumer-apps
DSP	dsp.ti.com	Energy and Lighting	www.ti.com/energy
Clocks and Timers	www.ti.com/clocks	Industrial	www.ti.com/industrial
Interface	interface.ti.com	Medical	www.ti.com/medical
Logic	logic.ti.com	Security	www.ti.com/security
Power Mgmt	power.ti.com	Space, Avionics and Defense	www.ti.com/space-avionics-defense
Microcontrollers	microcontroller.ti.com	Video and Imaging	www.ti.com/video
RFID	www.ti-rfid.com		
OMAP Mobile Processors	www.ti.com/omap	**TI E2E Community**	e2e.ti.com
Wireless Connectivity	www.ti.com/wirelessconnectivity		

Mailing Address: Texas Instruments, Post Office Box 655303, Dallas, Texas 75265
Copyright © 2012, Texas Instruments Incorporated