National Semiconductor

54LS10/DM54LS10/DM74LS10 Triple 3-Input NAND Gates

General Description

This device contains three independent gates each of which performs the logic NAND function.

Features

- Alternate Military/Aerospace device (54LS10) is available. Contact a National Semiconductor Sales Office/Distributor for specifications.

Connection Diagram

Dual-In-Line Package

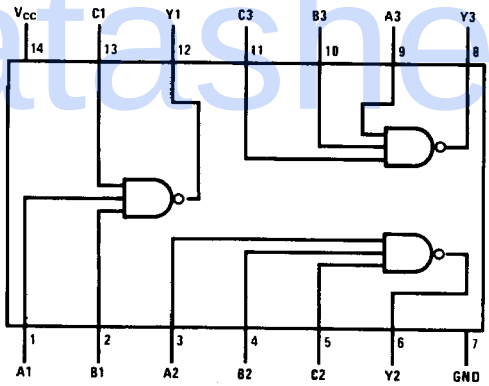

TL/F/6349–1

Order Number 54LS10DMQB, 54LS10FMQB, 54LS10LMQB, DM54LS10J, DM54LS10W, DM74LS10M or DM74LS10N
See NS Package Number E20A, J14A, M14A, N14A or W14B

Function Table

$Y = \overline{ABC}$

Inputs			Output
A	B	C	Y
X	X	L	H
X	L	X	H
L	X	X	H
H	H	H	L

H = High Logic Level
L = Low Logic Level
X = Either Low or High Logic Level

Datasheet.Liv

Absolute Maximum Ratings (Note)

If Military/Aerospace specified devices are required, please contact the National Semiconductor Sales Office/Distributors for availability and specifications.

Supply Voltage	7V
Input Voltage	7V
Operating Free Air Temperature Range	
DM54LS and 54LS	−55°C to +125°C
DM74LS	0°C to +70°C
Storage Temperature Range	−65°C to +150°C

Note: *The "Absolute Maximum Ratings" are those values beyond which the safety of the device cannot be guaranteed. The device should not be operated at these limits. The parametric values defined in the "Electrical Characteristics" table are not guaranteed at the absolute maximum ratings. The "Recommended Operating Conditions" table will define the conditions for actual device operation.*

Recommended Operating Conditions

Symbol	Parameter	DM54LS10			DM74LS10			Units
		Min	Nom	Max	Min	Nom	Max	
V_{CC}	Supply Voltage	4.5	5	5.5	4.75	5	5.25	V
V_{IH}	High Level Input Voltage	2			2			V
V_{IL}	Low Level Input Voltage			0.7			0.8	V
I_{OH}	High Level Output Current			−0.4			−0.4	mA
I_{OL}	Low Level Output Current			4			8	mA
T_A	Free Air Operating Temperature	−55		125	0		70	°C

Electrical Characteristics over recommended operating free air temperature range (unless otherwise noted)

Symbol	Parameter	Conditions		Min	Typ (Note 1)	Max	Units
V_I	Input Clamp Voltage	V_{CC} = Min, I_I = −18 mA				−1.5	V
V_{OH}	High Level Output Voltage	V_{CC} = Min, I_{OH} = Max, V_{IL} = Max	DM54	2.5	3.4		V
			DM74	2.7	3.4		
V_{OL}	Low Level Output Voltage	V_{CC} = Min, I_{OL} = Max, V_{IH} = Min	DM54		0.25	0.4	V
			DM74		0.35	0.5	
		I_{OL} = 4 mA, V_{CC} = Min	DM74		0.25	0.4	
I_I	Input Current @ Max Input Voltage	V_{CC} = Max, V_I = 7V				0.1	mA
I_{IH}	High Level Input Current	V_{CC} = Max, V_I = 2.7V				20	μA
I_{IL}	Low Level Input Current	V_{CC} = Max, V_I = 0.4V				−0.36	mA
I_{OS}	Short Circuit Output Current	V_{CC} = Max (Note 2)	DM54	−20		−100	mA
			DM74	−20		−100	
I_{CCH}	Supply Current with Outputs High	V_{CC} = Max			0.6	1.2	mA
I_{CCL}	Supply Current with Outputs Low	V_{CC} = Max			1.8	3.3	mA

Switching Characteristics at V_{CC} = 5V and T_A = 25°C (See Section 1 for Test Waveforms and Output Load)

Symbol	Parameter	R_L = 2 kΩ				Units
		C_L = 15 pF		C_L = 50 pF		
		Min	Max	Min	Max	
t_{PLH}	Propagation Delay Time Low to High Level Output	3	10	4	15	ns
t_{PHL}	Propagation Delay Time High to Low Level Output	3	10	4	15	ns

Note 1: All typicals are at V_{CC} = 5V, T_A = 25°C.

Note 2: Not more than one output should be shorted at a time, and the duration should not exceed one second.