LM301A, LM201A, LM201AV

Non Compensated Single Operational Amplifiers

A general purpose operational amplifier that allows the user to choose the compensation capacitor best suited to his needs. With proper compensation, summing amplifier slew rates to 10 V/μs can be obtained.

Features

- Low Input Offset Current: 20 nA Maximum Over Temperature Range
- External Frequency Compensation for Flexibility
- Class AB Output Provides Excellent Linearity
- Output Short Circuit Protection
- Guaranteed Drift Characteristics
- Pb−Free Packages are Available

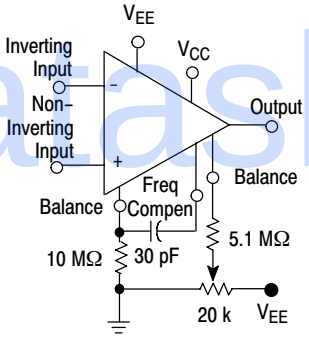

Figure 1. Standard Compensation and Offset Balancing Circuit

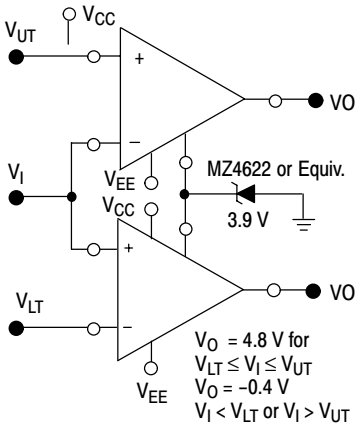

(Pins Not Shown Are Not Connected)

Figure 2. Double−Ended Limit Detector

ON Semiconductor®

http://onsemi.com

MARKING DIAGRAMS

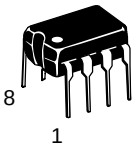

PDIP−8
N SUFFIX
CASE 626

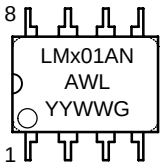

SOIC−8
D SUFFIX
CASE 751

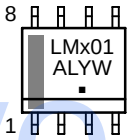

x	= 2 or 3
A	= Assembly Location
WL, L	= Wafer Lot
YY, Y	= Year
WW, W	= Work Week
G	= Pb−Free Package
▪	= Pb−Free Package

PIN CONNECTIONS

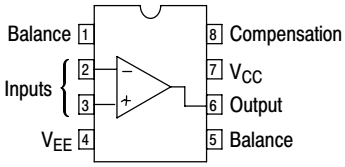

(Top View)

ORDERING INFORMATION

See detailed ordering and shipping information in the package dimensions section on page 2 of this data sheet.

Datasheet.Live

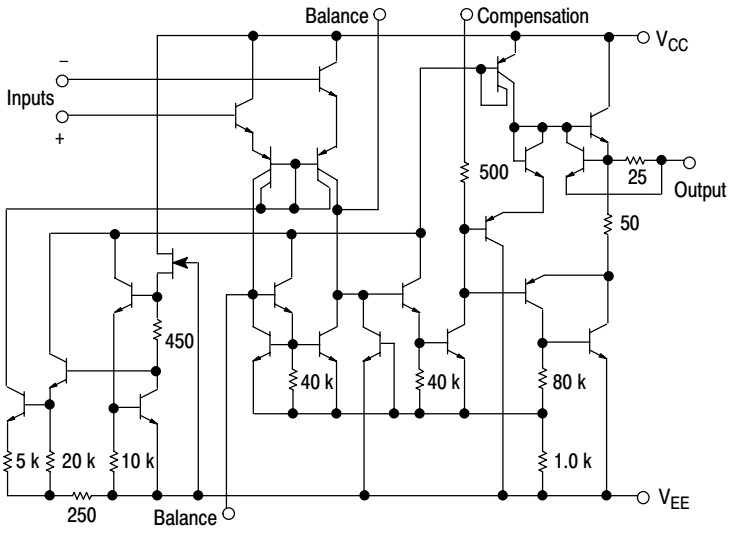

Figure 3. Representative Circuit Schematic

ORDERING INFORMATION

Device	Package	Shipping†
LM301AD	SOIC−8	98 Units/Rail
LM301ADG	SOIC−8 (Pb−Free)	98 Units/Rail
LM301ADR2	SOIC−8	2500 Tape & Reel
LM301ADR2G	SOIC−8 (Pb−Free)	2500 Tape & Reel
LM301AN	PDIP−8	50 Units/Rail
LM301ANG	PDIP−8 (Pb−Free)	50 Units/Rail
LM201AD	SOIC−8	98 Units/Rail
LM201ADG	SOIC−8 (Pb−Free)	98 Units/Rail
LM201ADR2	SOIC−8	2500 Tape & Reel
LM201ADR2G	SOIC−8 (Pb−Free)	2500 Tape & Reel
LM201AN	PDIP−8	50 Units/Rail
LM201ANG	PDIP−8 (Pb−Free)	50 Units/Rail
LM201AVDR2	SOIC−8	2500 Tape & Reel
LM201AVDR2G	SOIC−8 (Pb−Free)	2500 Tape & Reel

†For information on tape and reel specifications, including part orientation and tape sizes, please refer to our Tape and Reel Packaging Specifications Brochure, BRD8011/D.

MAXIMUM RATINGS

Rating	Symbol	Value			Unit
		LM201A	LM201AV	LM301A	
Power Supply Voltage	V_{CC}, V_{EE}	±22	±22	±18	Vdc
Input Differential Voltage	V_{ID}	±30			V
Input Common Mode Range (Note 1)	V_{ICR}	±15			V
Output Short Circuit Duration	t_{SC}	Continuous			
Power Dissipation (Package Limitation)	P_D				
Plastic Dual−In−Line Package		625	625	625	mW
Derate above T_A = +25°C		5.0	5.0	5.0	mW/°C
Operating Ambient Temperature Range	T_A	−25 to +85	−40 to +105	0 to +70	°C
Storage Temperature Range	T_{stg}	−65 to +150			°C

Maximum ratings are those values beyond which device damage can occur. Maximum ratings applied to the device are individual stress limit values (not normal operating conditions) and are not valid simultaneously. If these limits are exceeded, device functional operation is not implied, damage may occur and reliability may be affected.

ELECTRICAL CHARACTERISTICS (T_A = +25°C, unless otherwise noted.) Unless otherwise specified, these specifications apply for supply voltages from ±5.0 V to ±20 V for the LM201A and LM201AV, and from ±5.0 V to ±15 V for the LM301A.

Characteristic	Symbol	LM201A / LM201AV			LM301A			Unit
		Min	Typ	Max	Min	Typ	Max	
Input Offset Voltage (R_S ≤ 50 kΩ)	V_{IO}	−	0.7	2.0	−	2.0	7.5	mV
Input Offset Current	I_{IO}	−	1.5	10	−	3.0	50	nA
Input Bias Current	I_{IB}	−	30	75	−	70	250	nA
Input Resistance	r_i	1.5	4.0	−	0.5	2.0	−	MΩ
Supply Current	I_{CC},I_{EE}							mA
V_{CC}/V_{EE} = ±20 V		−	1.8	3.0	−	−	−	
V_{CC}/V_{EE} = ±15 V		−	−	−	−	1.8	3.0	
Large Signal Voltage Gain (V_{CC}/V_{EE} = ±15 V, V_O = ±10 V, R_L > 2.0 kΩ)	A_V	50	160	−	25	160	−	V/mV
The following specifications apply over the operating temperature range.								
Input Offset Voltage (R_S ≤ 50 kΩ)	V_{IO}	−	−	3.0	−	−	10	mV
Input Offset Current	I_{IO}	−	−	20	−	−	70	nA
Avg Temperature Coefficient of Input Offset Voltage (Note 2) T_A(min) ≤ T_A ≤ T_A (max)	$\Delta V_{IO}/\Delta T$	−	3.0	15	−	6.0	30	μV/°C
Avg Temperature Coefficient of Input Offset Current (Note 2)	$\Delta I_{IO}/\Delta T$							nA/°C
+25°C ≤ T_A ≤ T_A (max)		−	0.01	0.1	−	0.01	0.3	
T_A(min) ≤ T_A ≤ 25°C		−	0.02	0.2	−	0.02	0.6	
Input Bias Current	I_{IB}	−	−	100	−	−	300	nA
Large Signal Voltage Gain (V_{CC}/V_{EE} = ±15 V, V_O = ±10V, R_L > 2.0 kΩ)	A_{VOL}	25	−	−	15	−	−	V/mV
Input Voltage Range	V_{ICR}							V
V_{CC}/V_{EE} = ±20 V		−15	−	+15	−	−	−	
V_{CC}/V_{EE} = ±15 V		−	−	−	−12	−	+12	
Common Mode Rejection (R_S ≤ 50 kΩ)	CMR	80	96	−	70	90	−	dB
Supply Voltage Rejection (R_S ≤ 50 kΩ)	PSR	80	96	−	70	96	−	dB
Output Voltage Swing (V_{CC}/V_{EE} = ±15 V, R_L = ±10 kΩ, R_L > 2.0 kΩ)	V_O	±12 ±10	±14 ±13	− −	±12 ±10	±14 ±13	− −	V
Supply Currents (T_A = T_A(max), V_{CC}/V_{EE} = ±20 V)	I_{CC},I_{EE}	−	1.2	2.5	−	−	−	mA

1. For supply voltages less than ±15 V, the absolute maximum input voltage is equal to the supply voltage.
2. Guaranteed by design.

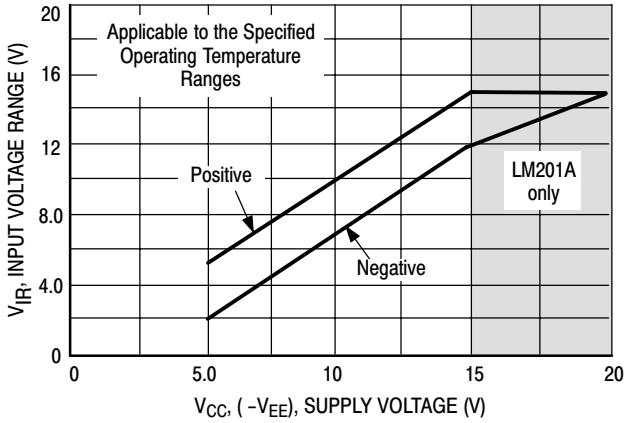

Figure 4. Minimum Input Voltage Range

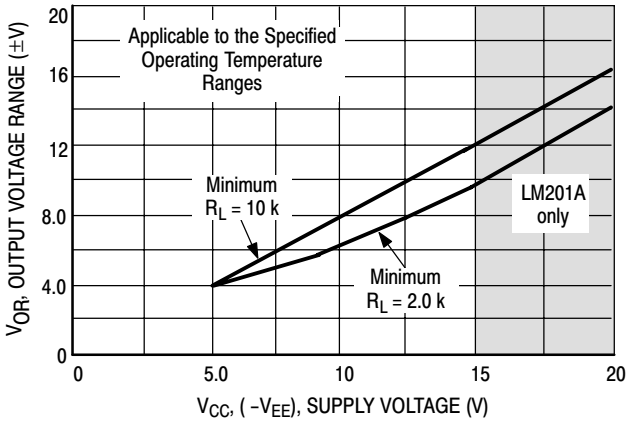

Figure 5. Minimum Output Voltage Swing

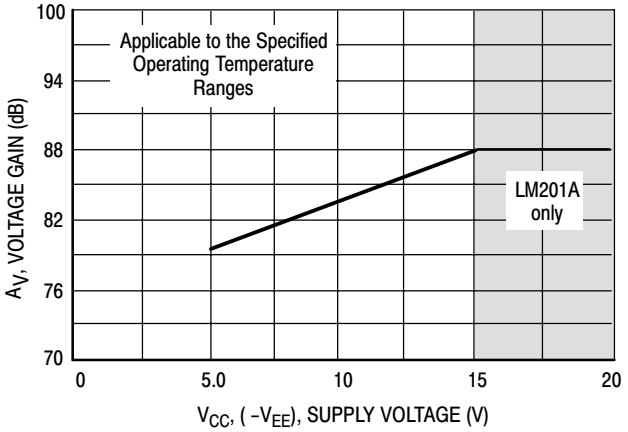

Figure 6. Minimum Voltage Gain

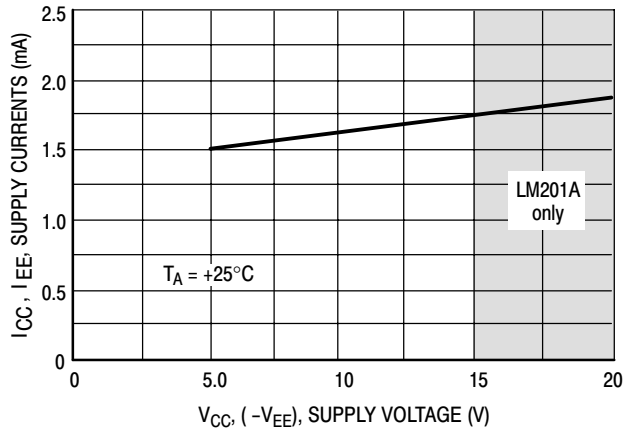

Figure 7. Typical Supply Currents

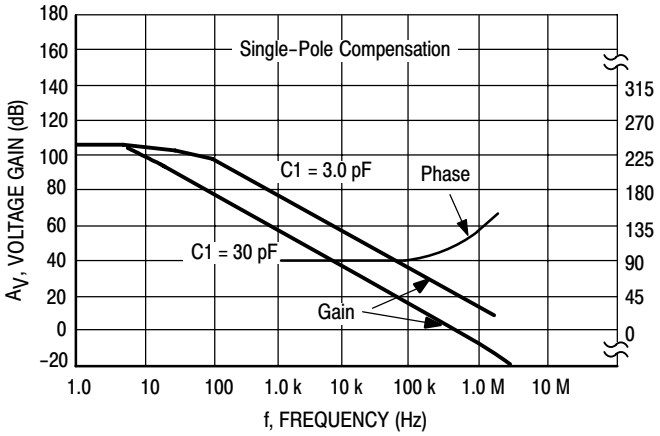

Figure 8. Open Loop Frequency Response

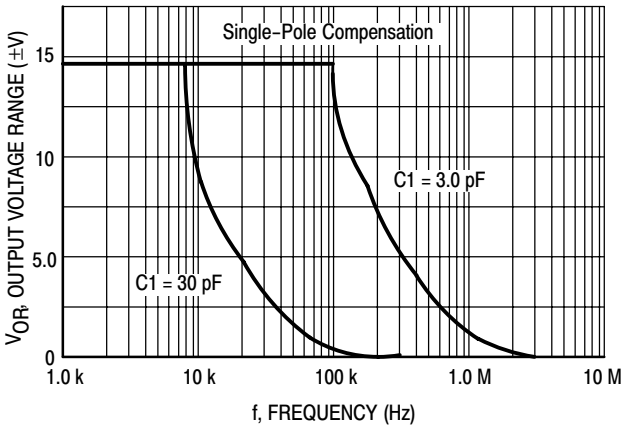

Figure 9. Large Signal Frequency Response

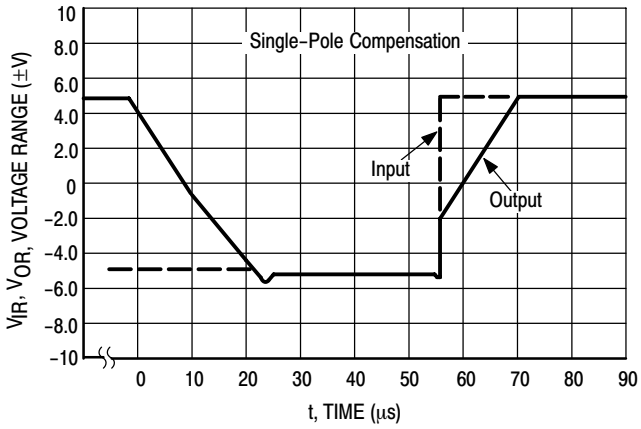

Figure 10. Voltage Follower Pulse Response

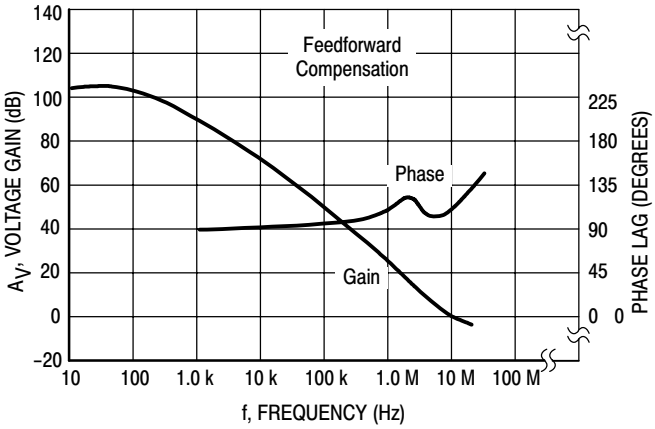

Figure 11. Open Loop Frequency Response

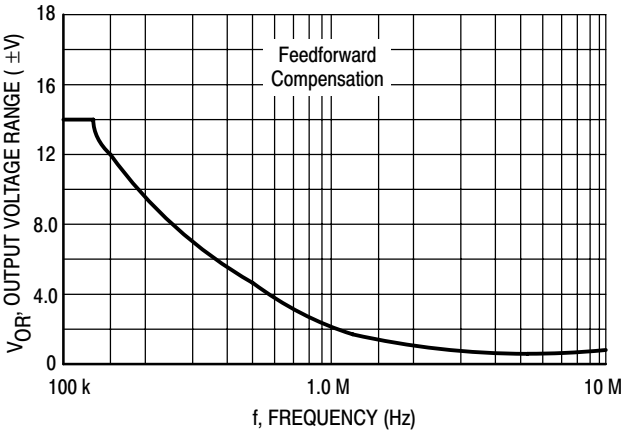

Figure 12. Large Signal Frequency Response

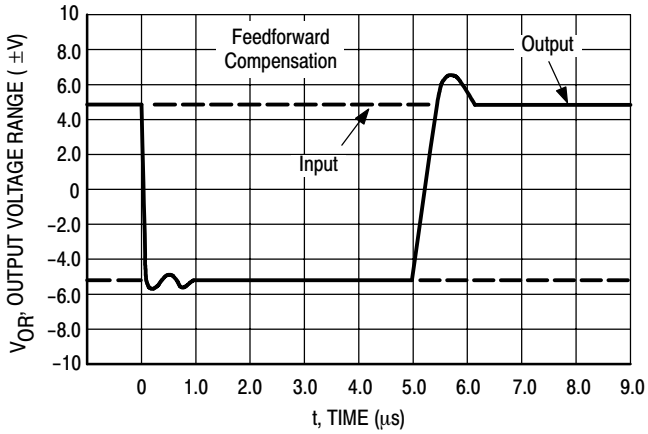

Figure 13. Inverter Pulse Response

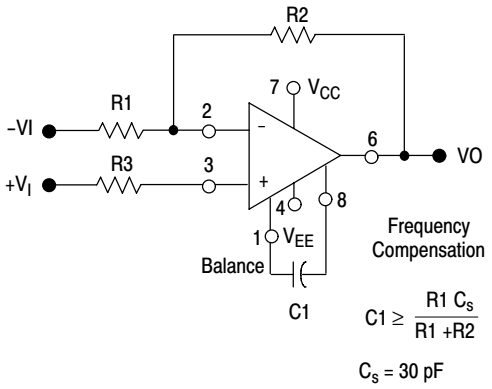

Figure 14. Single−Pole Compensation

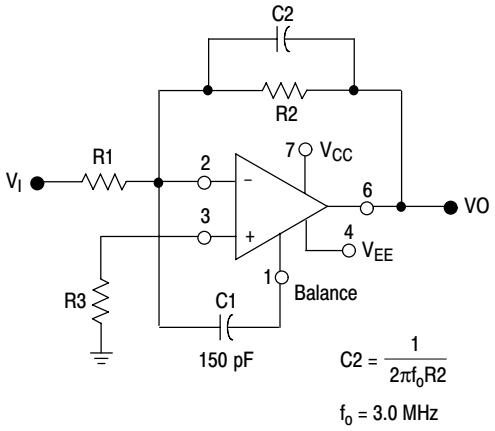

Figure 15. Feedforward Compensation

PACKAGE DIMENSIONS

PDIP−8
N SUFFIX
CASE 626−05
ISSUE L

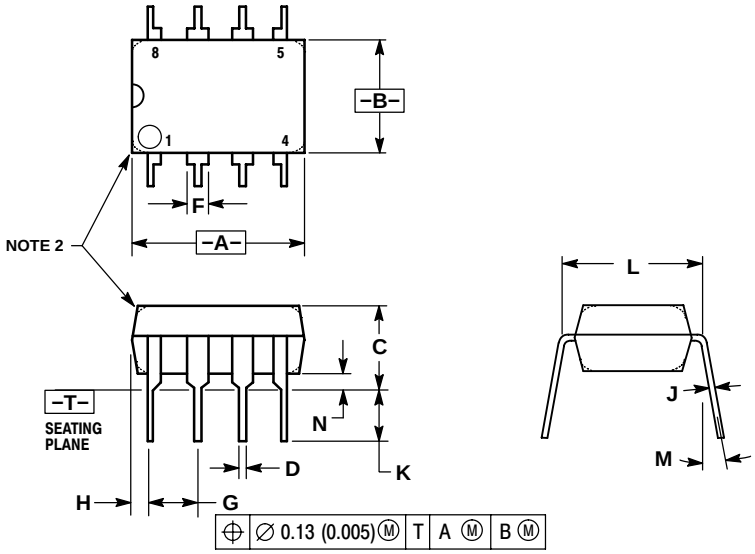

NOTES:
1. DIMENSION L TO CENTER OF LEAD WHEN FORMED PARALLEL.
2. PACKAGE CONTOUR OPTIONAL (ROUND OR SQUARE CORNERS).
3. DIMENSIONING AND TOLERANCING PER ANSI Y14.5M, 1982.

	MILLIMETERS		INCHES	
DIM	MIN	MAX	MIN	MAX
A	9.40	10.16	0.370	0.400
B	6.10	6.60	0.240	0.260
C	3.94	4.45	0.155	0.175
D	0.38	0.51	0.015	0.020
F	1.02	1.78	0.040	0.070
G	2.54 BSC		0.100 BSC	
H	0.76	1.27	0.030	0.050
J	0.20	0.30	0.008	0.012
K	2.92	3.43	0.115	0.135
L	7.62 BSC		0.300 BSC	
M	---	10°	---	10°
N	0.76	1.01	0.030	0.040

SOIC−8
D SUFFIX
CASE 751−07
ISSUE AG

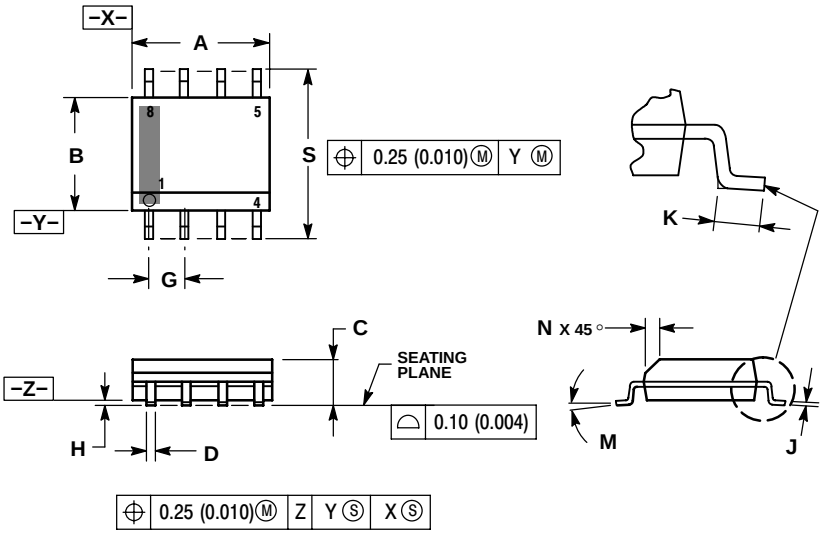

NOTES:
1. DIMENSIONING AND TOLERANCING PER ANSI Y14.5M, 1982.
2. CONTROLLING DIMENSION: MILLIMETER.
3. DIMENSION A AND B DO NOT INCLUDE MOLD PROTRUSION.
4. MAXIMUM MOLD PROTRUSION 0.15 (0.006) PER SIDE.
5. DIMENSION D DOES NOT INCLUDE DAMBAR PROTRUSION. ALLOWABLE DAMBAR PROTRUSION SHALL BE 0.127 (0.005) TOTAL IN EXCESS OF THE D DIMENSION AT MAXIMUM MATERIAL CONDITION.
6. 751−01 THRU 751−06 ARE OBSOLETE. NEW STANDARD IS 751−07.

	MILLIMETERS		INCHES	
DIM	MIN	MAX	MIN	MAX
A	4.80	5.00	0.189	0.197
B	3.80	4.00	0.150	0.157
C	1.35	1.75	0.053	0.069
D	0.33	0.51	0.013	0.020
G	1.27 BSC		0.050 BSC	
H	0.10	0.25	0.004	0.010
J	0.19	0.25	0.007	0.010
K	0.40	1.27	0.016	0.050
M	0 °	8 °	0 °	8 °
N	0.25	0.50	0.010	0.020
S	5.80	6.20	0.228	0.244

SOLDERING FOOTPRINT*

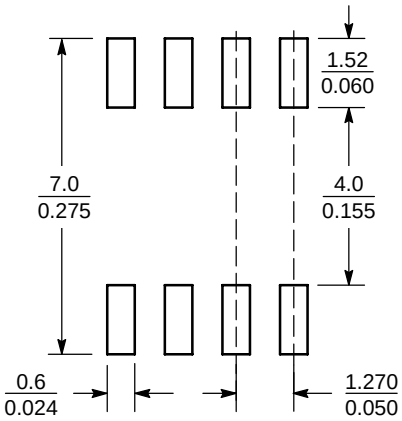

SCALE 6:1 $\left(\frac{\text{mm}}{\text{inches}}\right)$

*For additional information on our Pb−Free strategy and soldering details, please download the ON Semiconductor Soldering and Mounting Techniques Reference Manual, SOLDERRM/D.

ON Semiconductor and are registered trademarks of Semiconductor Components Industries, LLC (SCILLC). SCILLC reserves the right to make changes without further notice to any products herein. SCILLC makes no warranty, representation or guarantee regarding the suitability of its products for any particular purpose, nor does SCILLC assume any liability arising out of the application or use of any product or circuit, and specifically disclaims any and all liability, including without limitation special, consequential or incidental damages. “Typical” parameters which may be provided in SCILLC data sheets and/or specifications can and do vary in different applications and actual performance may vary over time. All operating parameters, including “Typicals” must be validated for each customer application by customer’s technical experts. SCILLC does not convey any license under its patent rights nor the rights of others. SCILLC products are not designed, intended, or authorized for use as components in systems intended for surgical implant into the body, or other applications intended to support or sustain life, or for any other application in which the failure of the SCILLC product could create a situation where personal injury or death may occur. Should Buyer purchase or use SCILLC products for any such unintended or unauthorized application, Buyer shall indemnify and hold SCILLC and its officers, employees, subsidiaries, affiliates, and distributors harmless against all claims, costs, damages, and expenses, and reasonable attorney fees arising out of, directly or indirectly, any claim of personal injury or death associated with such unintended or unauthorized use, even if such claim alleges that SCILLC was negligent regarding the design or manufacture of the part. SCILLC is an Equal Opportunity/Affirmative Action Employer. This literature is subject to all applicable copyright laws and is not for resale in any manner.

PUBLICATION ORDERING INFORMATION

LITERATURE FULFILLMENT:
Literature Distribution Center for ON Semiconductor
P.O. Box 61312, Phoenix, Arizona 85082−1312 USA
Phone: 480−829−7710 or 800−344−3860 Toll Free USA/Canada
Fax: 480−829−7709 or 800−344−3867 Toll Free USA/Canada
Email: orderlit@onsemi.com

N. American Technical Support: 800−282−9855 Toll Free USA/Canada

Japan: ON Semiconductor, Japan Customer Focus Center
2−9−1 Kamimeguro, Meguro−ku, Tokyo, Japan 153−0051
Phone: 81−3−5773−3850

ON Semiconductor Website: http://onsemi.com

Order Literature: http://www.onsemi.com/litorder

For additional information, please contact your local Sales Representative.