Customer Information Sheet

DRAWING No.: M50-19X0005 SHEET 2 OF 2	IF IN DOUBT - ASK	©	NOT TO SCALE	THIRD ANGLE PROJECTION	ALL DIMENSIONS IN mm

SPECIFICATION.
MATERIAL:
INSULATOR = NYLON 66, UL94V-0
FOR COLOUR SEE TABLE
CONTACT = COPPER ALLOY
FINISH:
0.025µ MIN GOLD FLASH OVER
0.81µ MIN NICKEL
ELECTRICAL:
CURRENT RATING = 1 AMP
INSULATION RESISTANCE = 1000M Ω MIN.
CONTACT RESISTANCE = 20m Ω MAX
DIELECTRIC VOLTAGE = 500V AC FOR ONE MINUTE
MECHANICAL:
INSERTION FORCE = 10.0N MAX
WITHDRAWAL FORCE = 0.6N MIN
DURABILITY:
300 OPERATIONS
ENVIRONMENTAL:
OPERATING TEMPERATURE = -40°C TO +105°C

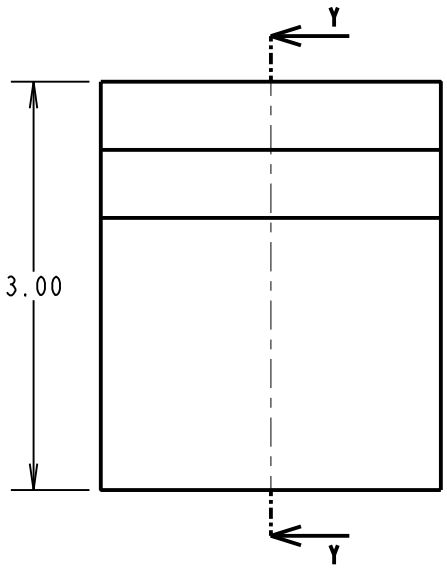

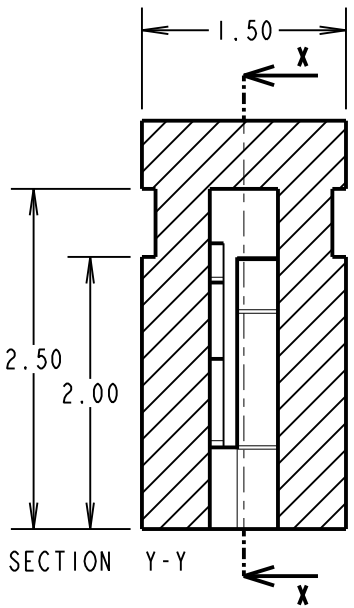

SECTION Y-Y

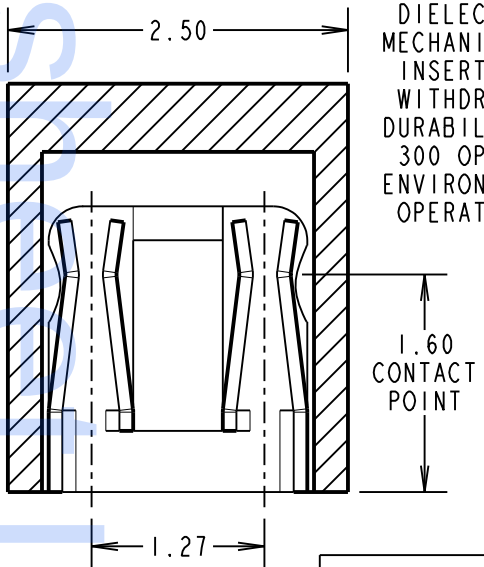

SECTION X-X

PART No.	COLOUR
M50-1900005	BLACK
M50-1920005	RED
M50-1930005	BLUE

RA	2	16.05.11	11276
NAME	ISS.	DATE	C/NOTE

APPROVED: R.ADDE
CHECKED: M.G.PLESTED
DRAWN: R.ADDE
CUSTOMER REF.:
ASSEMBLY DRG:

NOTES:
1. ALL TOLERANCES ARE ±0.13 UNLESS OTHERWISE STATED.

HARWIN

HARWIN USA
TEL: 603 893 5376
FAX: 603 893 5396
mis@harwin.com

HARWIN Europe (UK)
TEL: 023 9231 4545
FAX: 023 9231 4590
mis@harwin.co.uk

HARWIN Asia
TEL: +65 6 779 4909
FAX: +65 6 779 3868
mis@harwin.com.sg

THIS DRAWING AND ANY INFORMATION OR DESCRIPTIVE MATTER SET OUT HEREON ARE CONFIDENTIAL AND COPYRIGHT PROPERTY OF THE HARWIN GROUP AND MUST NOT BE DISCLOSED, LOANED, COPIED OR USED FOR MANUFACTURING, TENDERING OR FOR ANY OTHER PURPOSE WITHOUT THEIR WRITTEN PERMISSION.

TOLERANCES
X. = ±1mm
X.X = ±0.25mm
X.XX = ±0.10mm
X.XXX = ±0.01mm
ANGLES = ±5°
UNLESS STATED

MATERIAL:
FINISH:
S/AREA: mm²

TITLE: 1.27mm JUMPER SOCKET

DRAWING NUMBER: M50-19X0005

SHT 2 OF 2

Datasheet Live

Mouser Electronics

Authorized Distributor

Click to View Pricing, Inventory, Delivery & Lifecycle Information:

Harwin:

M50-1900005 M50-1920005 M50-1930005