# LT1083/LT1084/LT1085 Fixed

# 3A, 5A, 7.5A Low Dropout Positive Fixed Regulators

## FEATURES

- Three-Terminal 3.3V, 3.6V, 5V and 12V
- Output Current of 3A, 5A or 7.5A
- Operates Down to 1V Dropout
- Guaranteed Dropout Voltage at Multiple Current Levels
- Line Regulation: 0.015%
- Load Regulation: 0.1%
- 100% Thermal Limit Functional Test
- Adjustable Versions Available

## APPLICATIONS

- High Efficiency Linear Regulators
- Post Regulators for Switching Supplies
- Constant Current Regulators
- Battery Chargers

| DEVICE | OUTPUT CURRENT* |
|---|---|
| LT1083 | 7.5 Amps |
| LT1084 | 5.0 Amps |
| LT1085 | 3.0 Amps |

*For a 1.5A low dropout regulator see the LT1086 data sheet.

## DESCRIPTION

The LT®1083 series of positive adjustable regulators are designed to provide 3A, 5A and 7.5A with higher efficiency than currently available devices. All internal circuitry is designed to operate down to 1V input to output differential and the dropout voltage is fully specified as a function of load current. Dropout is guaranteed at a maximum of 1.5V at maximum output current, decreasing at lower load currents. On-chip trimming adjusts the output voltage to 1%. Current limit is also trimmed, minimizing the stress on both the regulator and power source circuitry under overload conditions.

The LT1083 series devices are pin compatible with older three-terminal regulators. A 10µF output capacitor is required on these new devices; however, this is usually included in most regulator designs.

Unlike PNP regulators, where up to 10% of the output current is wasted as quiescent current, the LT1083 quiescent current flows into the load, increasing efficiency.

LT, LTC and LTM are registered trademarks of Linear Technology Corporation.
All other trademarks are the property of their respective owners.

DatasheetLive

## TYPICAL APPLICATION

**5V, 7.5A Regulator**

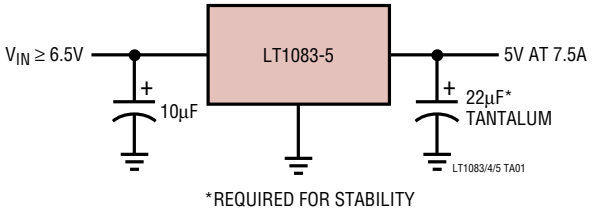


**Dropout Voltage vs Output Current**

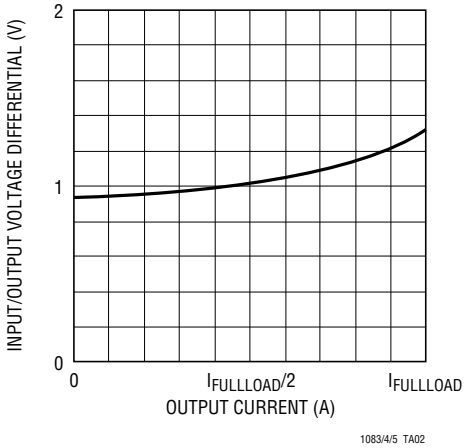

## ABSOLUTE MAXIMUM RATINGS (Note 1)

Power Dissipation ..... Internally Limited
Input Voltage* ..... 30V
Operating Input Voltage
  3.3V, 3.6V Devices ..... 20V
  5V Devices ..... 20V
  12V Devices ..... 25V
Operating Junction Temperature Range
  "C" Grades
    Control Section ..... 0°C to 125°C
    Power Transistor ..... 0°C to 150°C
  "M" Grades
    Control Section ..... –55°C to 150°C
    Power Transistor ..... –55°C to 200°C

Storage Temperature Range ..... –65°C to 150°C
Lead Temperature (Soldering, 10 sec) ..... 300°C

*Although the devices maximum operating voltage is limited, (20V for a 3V, 5V device, and 25V for a 12V device) the devices are guaranteed to withstand transient input voltages up to 30V. For input voltages greater than the maximum operating input voltage some degradation of specifications will occur. For input/output voltage differentials greater than 15V, a minimum external load of 5mA is required to maintain regulation.

## PRECONDITIONING

100% Thermal Limit Functional Test.

## PACKAGE/ORDER INFORMATION

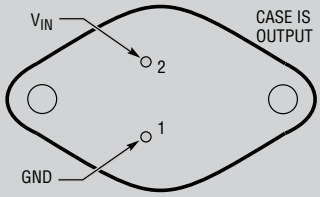


K PACKAGE
2-LEAD TO-3 METAL CAN
$\theta_{JA}$ = 35°C/W

ORDER PART NUMBER

| | |
|---|---|
| LT1083CK-5 | LT1084MK-5 |
| LT1083CK-12 | LT1084MK-12 |
| LT1083MK-5 | LT1085CK-5 |
| LT1083MK-12 | LT1085CK-12 |
| LT1084CK-5 | LT1085MK-5 |
| LT1084CK-12 | LT1085MK-12 |

**OBSOLETE NOT RECOMMENDED FOR NEW DESIGNS**

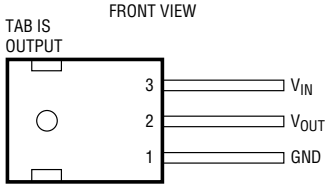


P PACKAGE
3-LEAD TO-3P PLASTIC
$\theta_{JA}$ = 45°C/W

ORDER PART NUMBER

LT1083CP-5
LT1083CP-12
LT1084CP-5
LT1084CP-12

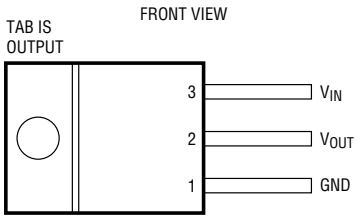


T PACKAGE
3-LEAD PLASTIC TO-220
$\theta_{JA}$ = 50°C/W

LT1084CT-3.3
LT1084CT-5
LT1084CT-12
LT1085CT-3.3
LT1085CT-3.6
LT1085CT-5
LT1085CT-12

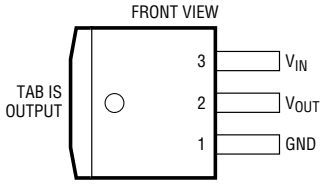


M PACKAGE
3-LEAD PLASTIC DD
$\theta_{JA}$ = 30°C/W*

*WITH PACKAGE SOLDERED TO 0.52IN$^2$ COPPER AREA OVER BACKSIDE GROUND PLANE OR INTERNAL POWER PLANE. $\theta_{JA}$ CAN VARY FROM 20°C/W TO > 40°C/W DEPENDING ON MOUNTING TECHNIQUE.

LT1085CM-3.3
LT1085CM-3.6
LT1085IM-3.6

Consult factory for parts specified with wider operating temperature ranges.

## ELECTRICAL CHARACTERISTICS

**The ● denotes the specifications which apply over the full operating temperature range, otherwise specifications are at $T_A$ = 25°C.**

| PARAMETER | CONDITIONS | | | MIN | TYP | MAX | UNITS |
|---|---|---|---|---|---|---|---|
| Output Voltage | LT1084-3.3 | $I_{OUT}$ = 0mA, $T_J$ = 25°C, $V_{IN}$ = 8V (K Package Only) | | 3.270 | 3.300 | 3.330 | V |
| | | 4.8V ≤ $V_{IN}$ ≤ 15V, 0 ≤ $I_{OUT}$ ≤ $I_{FULLOAD}$ (Notes 3, 4, 9) | ● | 3.235 | 3.300 | 3.365 | V |
| | LT1085-3.3 | $V_{IN}$ = 5V, $I_{OUT}$ = 0mA, $T_J$ = 25°C (K Package Only) | | 3.270 | 3.300 | 3.330 | V |
| | | 4.8V ≤ $V_{IN}$ ≤ 15V, 0 ≤ $I_{OUT}$ ≤ $I_{FULLOAD}$ (Notes 3, 4, 9) | ● | 3.235 | 3.300 | 3.365 | V |
| | LT1085-3.6 | $V_{IN}$ = 5V, $I_{OUT}$ = 0mA, $T_J$ = 25°C (K Package Only) | | 3.564 | 3.600 | 3.636 | V |
| | | 5V ≤ $V_{IN}$ ≤ 15V, 0 ≤ $I_{OUT}$ ≤ $I_{FULLOAD}$ (Note 9) | ● | 3.500 | | 3.672 | V |
| | | 5V ≤ $V_{IN}$ ≤ 15V, 0 ≤ $I_{OUT}$ ≤ $I_{FULLOAD}$, TJ ≥ 0°C (Notes 3, 4, 9) | | 3.528 | | 3.672 | V |
| | LT1085-3.6 | 5V ≤ $V_{IN}$ ≤ 15V, 0 ≤ $I_{OUT}$ ≤ 2.5A (Notes 3, 4, 9) | ● | 3.528 | | 3.672 | V |
| | | $V_{IN}$ = 4.75V, $I_{OUT}$ = 3A, $T_J$ ≥ 0°C | | 3.350 | | 3.672 | V |
| | | $V_{IN}$ = 4.75V, $I_{OUT}$ = 2.5A, $T_J$ ≥ 0°C | | 3.450 | | 3.672 | V |
| | | $V_{IN}$ = 4.75V, $I_{OUT}$ = 1.5A, $T_J$ > 0°C | | 3.528 | | 3.672 | V |
| | LT1083/4/5-5 | $I_{OUT}$ = 0mA, $T_J$ = 25°C, $V_{IN}$ = 8V (K Package Only) | | 4.950 | 5.000 | 5.050 | V |
| | | 0 ≤ $I_{OUT}$ ≤ $I_{FULLOAD}$, 6.5V ≤ $V_{IN}$ ≤ 20V (Notes 4, 6, 7, 9) | | 4.900 | 5.000 | 5.100 | V |
| | LT1083/4/5-12 | $I_{OUT}$ = 0mA, $T_J$ = 25°C, $V_{IN}$ = 15V (K Package Only) | | 11.880 | 12.000 | 12.120 | V |
| | | 0 ≤ $I_{OUT}$ ≤ $I_{FULLOAD}$, 13.5V ≤ $V_{IN}$ ≤ 25V (Notes 4, 6, 7, 9) | | 11.760 | 12.000 | 12.240 | V |
| Line Regulation | LT1084-3.3 | $I_{OUT}$ = 0mA, $T_J$ = 25°C, 4.8V ≤ $V_{IN}$ ≤ 15V | | | 0.5 | 6 | mV |
| | | | ● | | 1.0 | 6 | mV |
| | LT1085-3.3 | 4.8V ≤ $V_{IN}$ ≤ 15V, $I_{OUT}$ = 0mA, $T_J$= 25°C | | | 0.5 | 6 | mV |
| | | | ● | | 1.0 | 6 | mV |
| | LT1085-3.6 | 4.8V ≤ $V_{IN}$ ≤ 15V, $I_{OUT}$ = 0mA, $T_J$= 25°C | | | 0.5 | 6 | mV |
| | | | ● | | 1.0 | 6 | mV |
| | LT1083/4/5-5 | $I_{OUT}$ = 0mA, $T_J$ = 25°C, 6.5V ≤ $V_{IN}$ ≤ 20V (Notes 2, 3) | | | 0.5 | 10 | mV |
| | | | ● | | 1.0 | 10 | mV |
| | LT1083/4/5-12 | $I_{OUT}$ = 0mA, $T_J$ = 25°C, 13.5V ≤ $V_{IN}$ ≤ 25V (Notes 2, 3) | | | 1.0 | 25 | mV |
| | | | ● | | 2.0 | 25 | mV |
| Load Regulation | LT1084-3.3 | $V_{IN}$ = 5V, 0 ≤ $I_{OUT}$ ≤ 5A, $T_J$ = 25°C | | | 3 | 15 | mV |
| | | | ● | | 7 | 20 | mV |
| | LT1085-3.3 | $V_{IN}$ = 5V, 0 ≤ $I_{OUT}$ ≤ 3A, $T_J$ = 25°C | | | 3 | 15 | mV |
| | | | ● | | 7 | 20 | mV |
| | LT1085-3.6 | $V_{IN}$ = 5.25V, 0 ≤ $I_{OUT}$ ≤ 3A, $T_J$ = 25°C | | | 3 | 15 | mV |
| | | | ● | | 7 | 20 | mV |
| | LT1083/4/5-5 | $V_{IN}$ = 8V, 0 ≤ $I_{OUT}$ ≤ $I_{FULLLOAD,}$ $T_J$ = 25°C (Notes 2, 3, 4, 6) | | | 5 | 20 | mV |
| | | | ● | | 10 | 35 | mV |
| | LT1083/4/5-12 | $V_{IN}$ = 15V, 0 ≤ $I_{OUT}$ ≤ $I_{FULLLOAD,}$ $T_J$ = 25°C (Notes 2, 3, 4, 6) | | | 12 | 36 | mV |
| | | | ● | | 24 | 72 | mV |
| Dropout Voltage | LT1084/5-3.3 | $\Delta V_{OUT}$ = 33mV, $I_{OUT}$ = $I_{FULL\ LOAD}$ (Notes 5, 6) | ● | | 1.3 | 1.5 | V |
| | LT1085-3.6 | $\Delta V_{OUT}$ = 36mV, $I_{OUT}$ = $I_{FULL\ LOAD}$ (Notes 5, 6) | ● | | 1.3 | 1.5 | V |
| | LT1083/4/5-5 | $\Delta V_{OUT}$ = 50mV, $I_{OUT}$ = $I_{FULL\ LOAD}$ (Notes 5, 6) | ● | | 1.3 | 1.5 | V |
| | LT1083/4/5-12 | $\Delta V_{OUT}$ = 120mV, $I_{OUT}$ = $I_{FULL\ LOAD}$ (Notes 5, 6) | ● | | 1.3 | 1.5 | V |
| Current Limit | LT1083-5 | $V_{IN}$ = 10V | ● | 8.0 | 9.5 | | A |
| | LT1083-12 | $V_{IN}$ = 17V | ● | 8.0 | 9.5 | | A |
| | LT1084-3.3 | $V_{IN}$ = 8V | ● | 5.5 | 6.5 | | A |
| | LT1084-5 | $V_{IN}$ = 10V | ● | 5.5 | 6.5 | | A |
| | LT1084-12 | $V_{IN}$ = 17V | ● | 5.5 | 6.5 | | A |
| | LT1085-3.3/3.6 | $V_{IN}$ = 8V | ● | 3.2 | 4.0 | | A |
| | LT1085-5 | $V_{IN}$ = 10V | ● | 3.2 | 4.0 | | A |
| | LT1085-12 | $V_{IN}$ = 17V | ● | 3.2 | 4.0 | | A |

## ELECTRICAL CHARACTERISTICS

**The ● denotes the specifications which apply over the full operating temperature range, otherwise specifications are at $T_A$ = 25°C.**

| PARAMETER | CONDITIONS | | MIN | TYP | MAX | UNITS |
|---|---|---|---|---|---|---|
| Quiescient Current | LT1084-3.3 $V_{IN}$ = 18V | ● | | 5.0 | 10.0 | mA |
| | LT1085-3.3 $V_{IN}$ = 18V | ● | | 5.0 | 10.0 | mA |
| | LT1085-3.6 $V_{IN}$ = 18V | ● | | 5.0 | 10.0 | mA |
| | LT1083/4/5-5 $V_{IN} \le$ 20V | ● | | 5.0 | 10.0 | mA |
| | LT1083/4/5-12 $V_{IN} \le$ 25V | ● | | 5.0 | 10.0 | mA |
| Thermal Regulation | LT1083-5/12 $T_A$ = 25°C, 30ms pulse | | | 0.002 | 0.010 | %/W |
| | LT1084-3.3/5/12 | | | 0.003 | 0.015 | %/W |
| | LT1085-3.3/3.6/5/12 | | | 0.004 | 0.020 | %/W |
| Ripple Rejection | f = 120Hz, $C_{OUT}$ = 25µF Tantalum, $I_{OUT}$ = $I_{FULLLOAD}$ (Note 4) | | | | | |
| | LT1084-3.3 f = 120Hz, $C_{OUT}$ = 25µF Tantalum, $I_{OUT}$ = 5A, $V_{IN}$ = 6.3V | ● | 60 | 72 | | dB |
| | LT1085-3.3 f = 120Hz, $C_{OUT}$ = 25µF Tantalum, $V_{IN}$ = 6.3V, $I_{OUT}$ = 3A | ● | 60 | 72 | | dB |
| | LT1085-3.6 f = 120Hz, $C_{OUT}$ = 25µF Tantalum, $V_{IN}$ = 6.6V, $I_{OUT}$ = 3A | ● | 60 | 72 | | dB |
| | LT1083/4/5-5 $V_{IN}$ = 8V (Note 6) | ● | 60 | 68 | | dB |
| | LT1083/4/5-12 $V_{IN}$ = 15V (Note 6) | ● | 54 | 60 | | dB |
| Temperature Stability | | ● | | 0.5 | | % |
| Long Term Stability | $T_A$ = 125°C, 1000 Hrs. | | | 0.03 | 1.0 | % |
| RMS Output Noise (% of $V_{OUT}$) | $T_A$ = 25°C, 10Hz = ≤ f ≤ 10kHz | | | 0.003 | | % |
| Thermal Resistance Junctrion-to-Case | Control Circuitry/Power Transistor (See Applications Information) | | | | | |
| | LT1083 K Package | | | | 0.6/1.6 | °C/W |
| | LT1083 P Package | | | | 0.5/1.6 | °C/W |
| | LT1084 K Package | | | | 0.75/2.3 | °C/W |
| | LT1084 P Package | | | | 0.65/2.3 | °C/W |
| | LT1084 T Package | | | | 0.65/2.7 | °C/W |
| | LT1085 K Package | | | | 0.9/3.0 | °C/W |
| | LT1085 T Package | | | | 0.7/3.0 | °C/W |
| | LT1085 DD Package | | | | 0.7/3.0 | °C/W |

**Note 1:** Stresses beyond those listed under Absolute Maximum Ratings may cause permanent damage to the device. Exposure to any Absolute Maximum Rating condition for extended periods may affect device reliability and lifetime.

**Note 2:** See thermal regulation specifications for changes in output voltage due to heating effects. Load and line regulation are measured at a constant junction temperature by low duty cycle pulse testing.

**Note 3:** Line and load regulation are guaranteed up to the maximum power dissipation (60W for the LT1083, 45W for the LT1084 (K, P), 30W for the LT1084 (T) and 30W for the LT1085). Power dissipation is determined by the input/output differential and the output current. Guaranteed maximum power dissipation will not be available over the full input/output range.

**Note 4:** $I_{FULL\ LOAD}$ is defined in the current limit curves. The $I_{FULLLOAD}$ curve is defined as the minimum value of current limit as a function of input to output voltage. Note that the 60W power dissipation for the LT1083 (45W for the LT1084 (K, P), 30W for the LT1084 (T), 30W for the LT1085) is only achievable over a limited range of input to output voltage.

**Note 5:** Dropout voltage is specified over the full output current range of the device. Test points and limits are shown on the Dropout Voltage curve.

**Note 6:** For LT1083 $I_{FULL\ LOAD}$ is 5A for –55°C ≤ $T_J$ ≤ –40°C and 7.5A for $T_J$ ≥ –40°C.

**Note 7:** 1.7V ≤ ($V_{IN}$ – $V_{OUT}$) ≤ 25V for LT1084 at –55°C ≤ $T_J$ ≤ –40°C.

**Note 8:** Dropout voltage 1.7V maximum for LT1084 at –55°C ≤ $T_J$ ≤ –40°C.

**Note 9:** Full load current is not available at all input-output voltages. See Notes 3, 4, 6.

# TYPICAL PERFORMANCE CHARACTERISTICS

### LT1083 Dropout Voltage

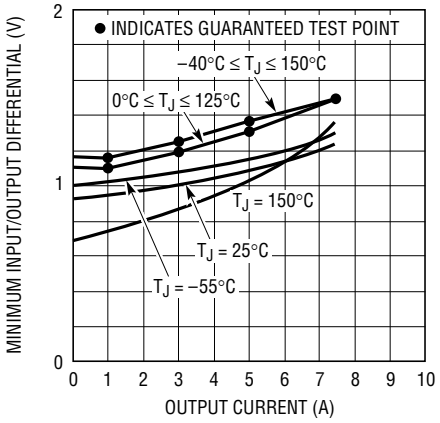


### LT1083 Short-Circuit Current

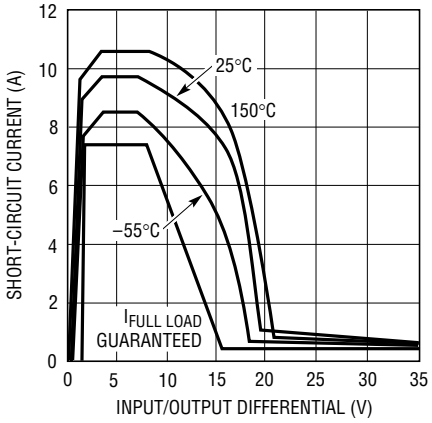


### LT1083 Load Regulation

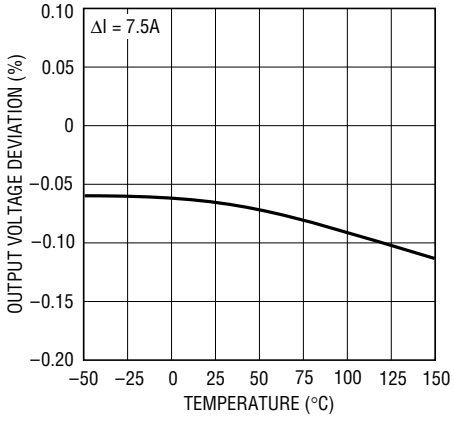


### LT1084 Dropout Voltage

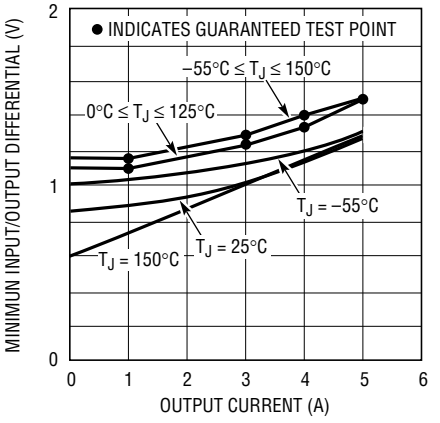


### LT1084 Short Circuit Current

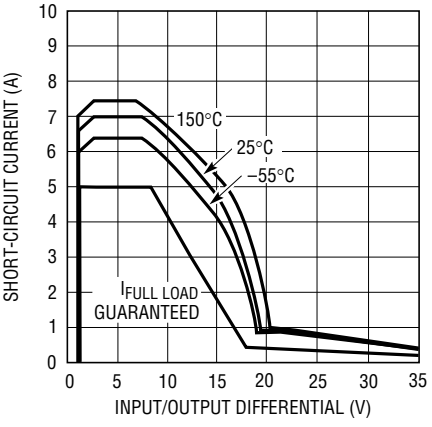


### LT1084 Load Regulation

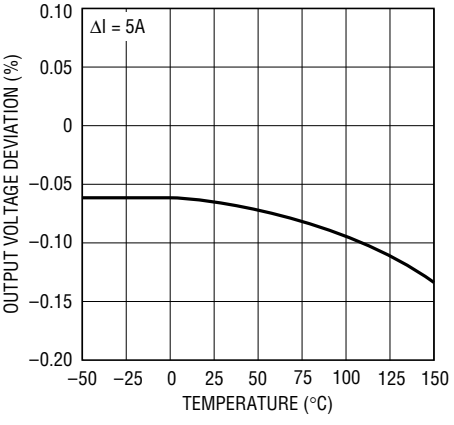


### LT1085 Dropout Voltage

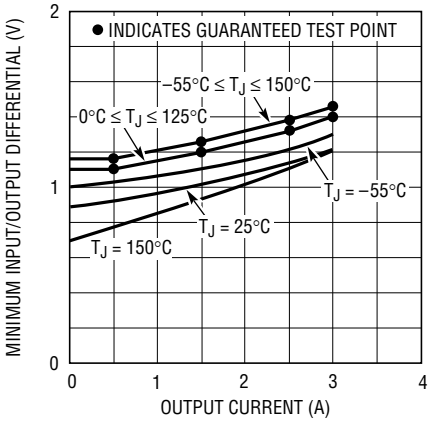


### LT1085 Short-Circuit Current

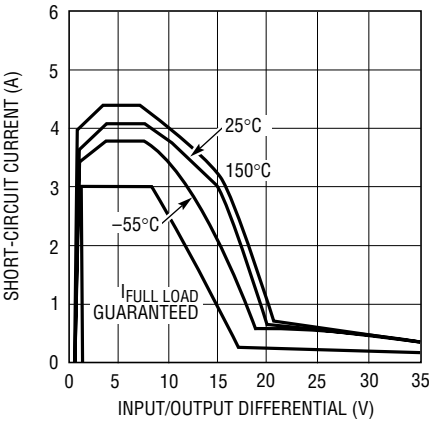


### LT1085 Load Regulation

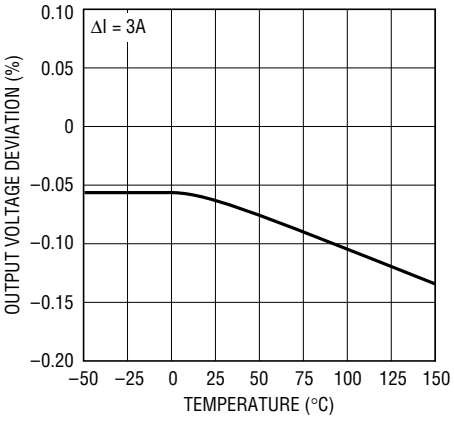

## TYPICAL PERFORMANCE CHARACTERISTICS

### LT1083/4/5-5 Ripple Rejection

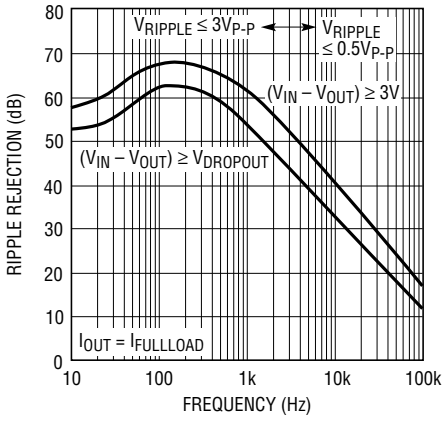


### LT1083/4/5-5 Ripple Rejection vs Current

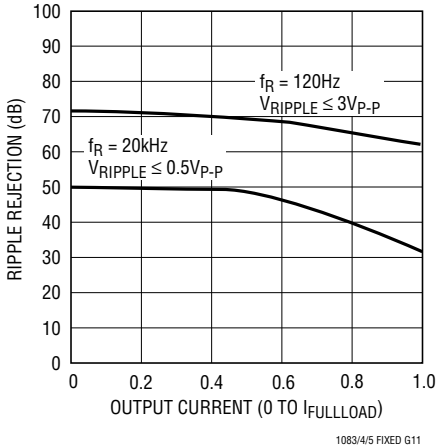


### Temperature Stability

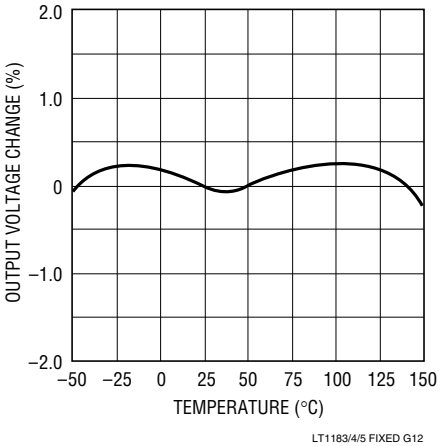


### LT1083/4/5-12 Ripple Rejection

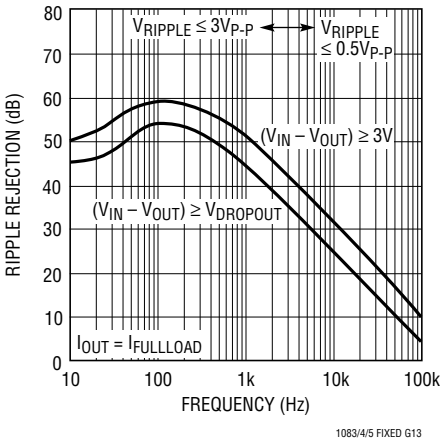


### LT1083/4/5-12 Ripple Rejection vs Current

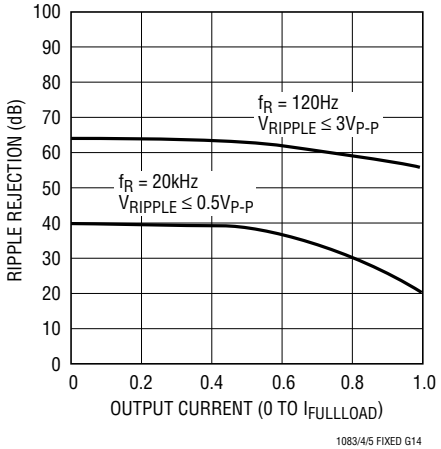


### LT1083 Maximum Power Dissipation*

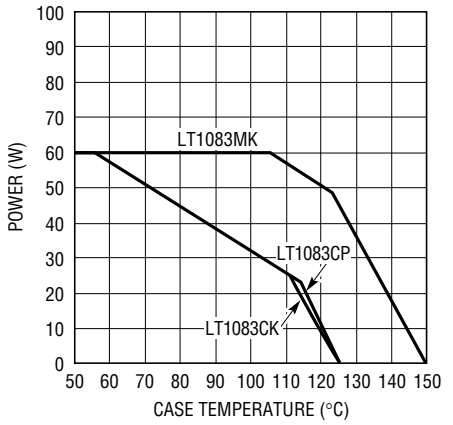


* AS LIMITED BY MAXIMUM JUNCTION TEMPERATURE

LT1083/4/5 FIXED G15

### LT1084 Maximum Power Dissipation*

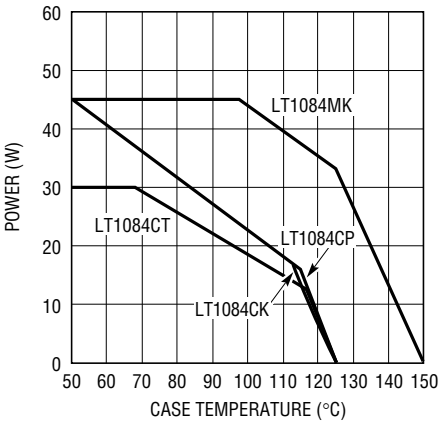


* AS LIMITED BY MAXIMUM JUNCTION TEMPERATURE

LT1083/4/5 FIXED G16

### LT1085 Maximum Power Dissipation*

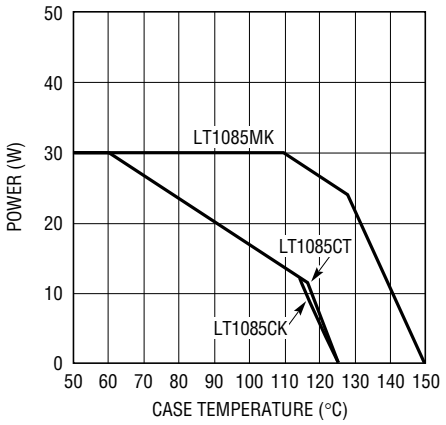


* AS LIMITED BY MAXIMUM JUNCTION TEMPERATURE

LT1083/4/5 FIXED G17

## BLOCK DIAGRAM

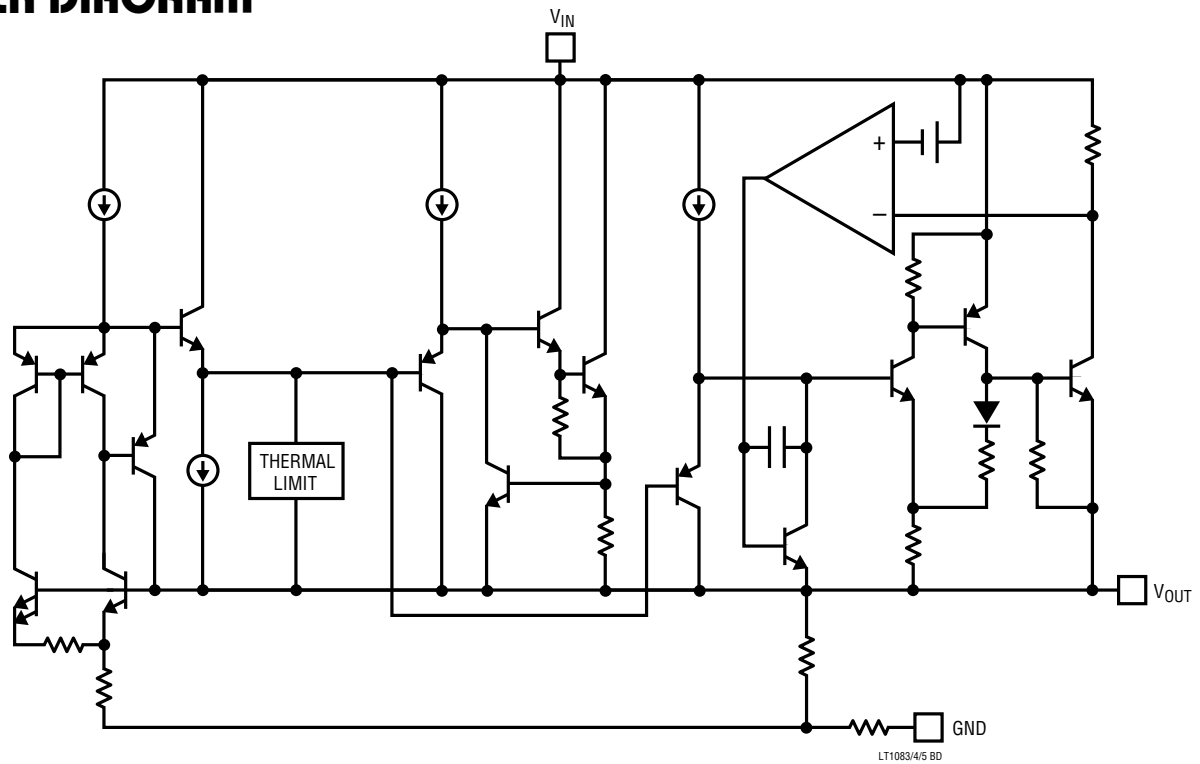


## APPLICATIONS INFORMATION

The LT1083 family of three-terminal regulators are easy to use and have all the protection features that are expected in high performance voltage regulators. They are short circuit protected, have safe area protection as well as thermal shutdown to turn off the regulator should the temperature exceed about 165°C.

These regulators offer lower dropout voltage and more precise reference tolerance. Further, the reference stability with temperature is improved over older types of regulators. The only circuit difference between using the LT1083 family and older regulators is that they require an output capacitor for stability.

### Stability

The circuit design used in the LT1083 family requires the use of an output capacitor as part of the device frequency compensation. For all operating conditions, the addition of 150µF aluminum electrolytic or a 22µF solid tantalum on the output will ensure stability. Normally capacitors much smaller than this can be used with the LT1083. Many different types of capacitors with widely varying characteristics are available. These capacitors differ in capacitor tolerance (sometimes ranging up to ±100%), equivalent series resistance, and capacitance temperature coefficient. The 150µF or 22µF values given will ensure stability.

Normally, capacitor values on the order of 100µF are used in the output of many regulators to ensure good transient response with heavy load current changes. Output capacitance can be increased without limit and larger values of output capacitance further improve stability and transient response of the LT1083 regulators.

Another possible stability problem that can occur in monolithic IC regulators is current limit oscillations. These can occur because in current limit the safe area protection exhibits a negative impedance. The safe area protection decreases the current limit as the input-to-output voltage increases.That is the equivalent of having a negitive resistance since increasing voltage causes current to decrease. Negitive resistance during current limit is not unique to the LT1083 series and has been present on all power IC regulators. The value of negative resistance is a function of how fast the current limit is

## APPLICATIONS INFORMATION

folded back as input-to-output voltage increases. This negative resistance can react with capacitors or inductors on the input to cause oscillations during current limiting. Depending on the value of series resistance, the overall circuitry may end up unstable. Since this is a system problem, it is not necessarily easy to solve; however it does not cause any problems with the IC regulator and can usually be ignored.

### Protection Diodes

In normal operation the LT1083 family does not need any protection diodes, The internal diode between the input and the output pins of the LT1083 family can handle microsecond surge currents of 50A to 100A. Even with large output capacitances it is very difficult to get those values of surge current in normal operation. Only with high value output capacitors, such as 1000µF to 5000µF and with the input pin instantaneously shorted to ground, can damage occur. A crowbar circuit at the input of the LT1083 can generate those kinds of currents and a diode from output-to-input is then recommended. Normal power supply cycling or even plugging and unplugging in the system will not generate currents large enough to do any damage.

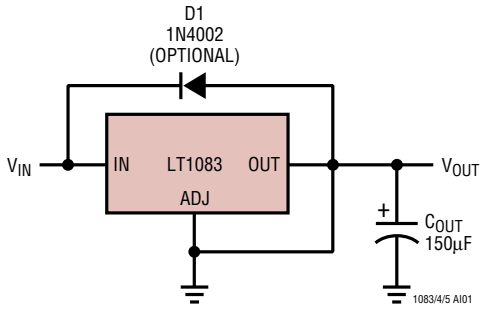


### Overload Recovery

Like any of the IC power regulators, the LT1083 has safe area protection. The safe area protection decreases the current limit as input-to-output voltage increases and keeps the power transistor inside a safe operating region for all values of input-to-output voltage. The LT1083 protection is designed to provide some output current at all values of input-to-output voltage up to the device breakdown.

When power is first turned on, as the input voltage rises, the output follows the input, allowing the regulator to start up into very heavy loads. During the start-up, as the input voltage is rising, the input-to-output voltage differential remains small allowing the regulator to supply large output currents. With high input voltage a problem can occur wherein removal of an output short will not allow the output voltage to recover. Older regulators such as the 7800 series, also exhibited this phenomenon so it is not unique to the LT1083.

The problem occurs with a heavy output load when the input voltage is high and the output voltage is low, such as immediately after a removal of a short. The load line for such a load may intersect the output current curve at two points. If this happens there are two stable output operating points for the regulator. With this double intersection the power supply may need to be cycled down to zero and brought up again to make the output recover.

### Ripple Rejection

In applications that require improved ripple rejection the LT1083 series adjustable regulators should be used. With LT1083 series adjustable regulators the addition of a bypass capacitor from the adjust pin to ground will reduce output ripple by the ratio of $V_{OUT}$/1.25V. See LT1083 series adjustable regulator data sheet.

### Load Regulation

Because the LT1083 is a three-terminal device, it is not possible to provide true remote load sensing. Load regulation will not be limited by the resistance of the wire connecting the regulator to the load. The data sheet specification for the load regulation is measured at the bottom of the package. Negative side sensing is a true Kelvin connection, with the ground pin of the device returned to the negative side of the load.

### Thermal Considerations

The LT1083 series of regulators have internal power and thermal limiting circuitry designed to protect the device under overload conditions. For continuous normal load conditions however, maximum junction temperature ratings must not be exceeded. It is important to give careful consideration to all sources of thermal resistance from junction to ambient. This includes junction-to-case,

## APPLICATIONS INFORMATION

case-to-heat sink interface, and heat sink resistance itself. New thermal resistance specifications have been developed to more accurately reflect device temperature and ensure safe operating temperatures. The data section for these new regulators provides a separate thermal resistance and maximum junction temperature for both the *Control Section* and the *Power Section*. Previous regulators, with a single junction-to-case thermal resistance specification, used an average of the two values provided here and therefore could allow excessive junction temperatures under certain conditions of ambient temperature and heat sink resistance. To avoid this possibility, calculations should be made for both sections to ensure that both thermal limits are met.

Junction-to-case thermal resistance is specified from the IC junction to the bottom of the case directly below the die. This is the lowest resistance path for heat flow. Proper mounting is required to ensure the best possible thermal flow from this area of the package to the heat sink. Thermal compound at the case-to-heat sink interface is strongly recommended. If the case of the device must be electronically isolated, a thermally conductive spacer can be used as long as its added contribution to thermal resistance is considered. Note that the case of all devices in this series is electronically connected to the ouput.

For example, using a LT1083-5CP (TO-3P, Commercial) and assuming:

$V_{IN}$(max continuous) = 9V, $V_{OUT}$ = 5V, $I_{OUT}$ = 6A, $T_A$ = 75°C, $\theta_{HEAT\ SINK}$ = 1°C/W, $\theta_{CASE\text{-}TO\text{-}HEAT\ SINK}$ = 0.2°C/W for P package with thermal compound.

Power dissipation under these conditions is equal to:

$$P_D = (V_{IN} - V_{OUT})\ (I_{OUT}) = 24W$$

Junction temperature will be equal to:

$$T_J = T_A + P_D\ (\theta_{HEAT\ SINK} + \theta_{CASE\text{-}TO\text{-}HEAT\ SINK} + \theta_{JC})$$

For the Control Section:

$T_J$ = 75°C + 24W (1°C/W + 0.2°C/W + 0.5°C/W) = 118°C

118°C < 125°C = $T_{JMAX}$ (Control Section Commercial Range)

For the Power Transistor:

$T_J$ = 75°C + 24W (1°C/W + 0.2°C/W + 1.6°C/W) = 142°C

142°C < 150°C = $T_{JMAX}$ (Power Transistor Commercial Range)

In both cases the junction temperature is below the maximum rating for the respective sections, ensuring reliable operation.

## TYPICAL APPLICATIONS

**High Efficiency Regulator**

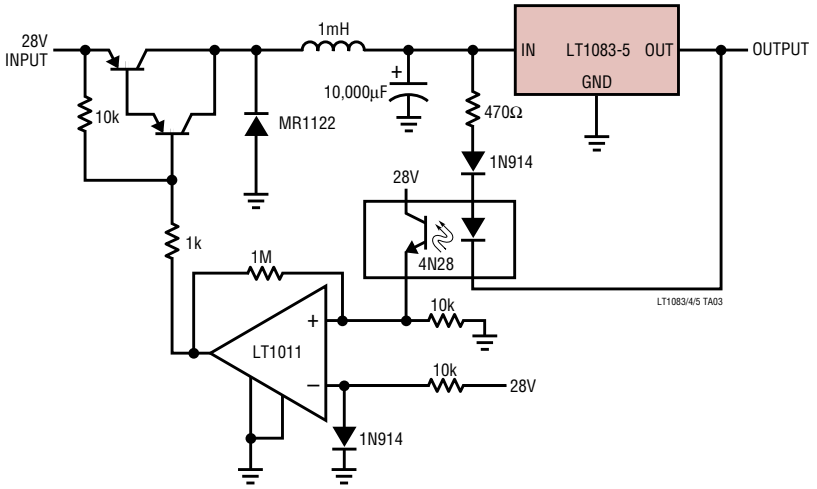


**Paralleling Regulators**

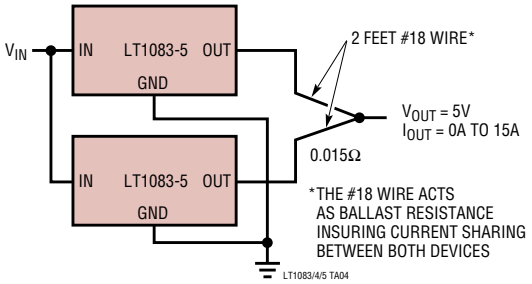

## TYPICAL APPLICATIONS

**7.5A Regulator**

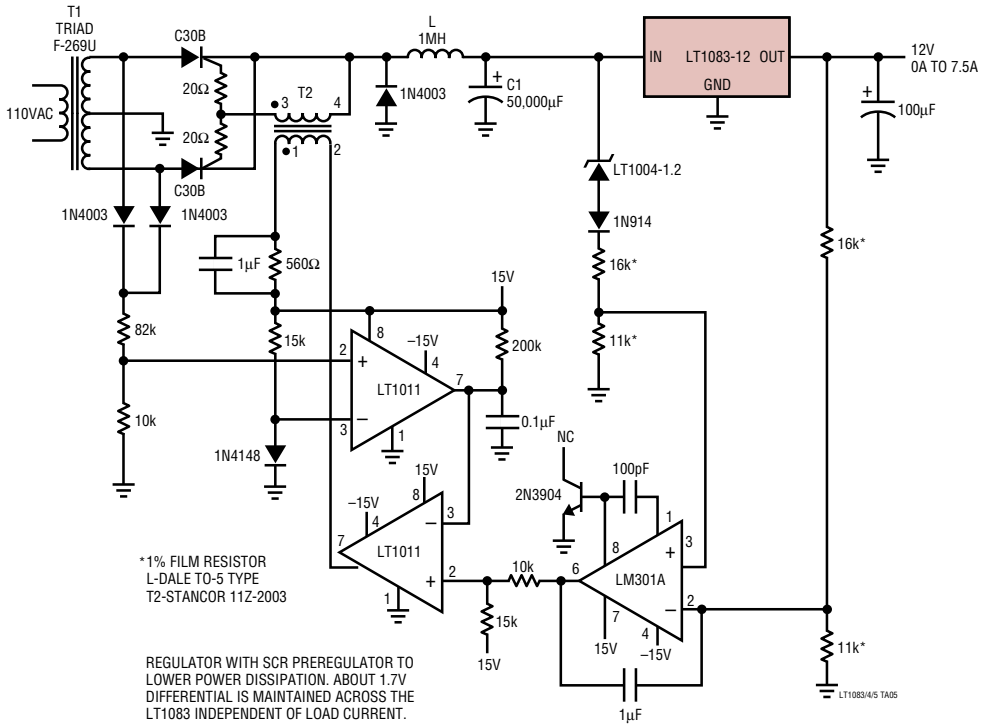


## PACKAGE DESCRIPTION

**K Package**
**2-Lead TO-3 Metal Can**
(LTC DWG # 05-08-1310)

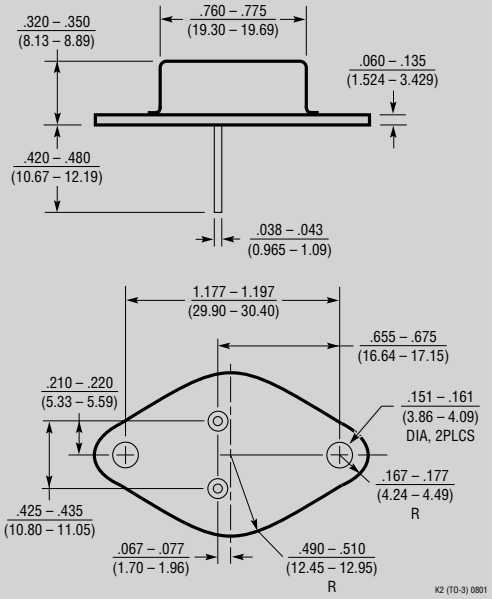


**OBSOLETE PACKAGE**

**T Package**
**3-Lead Plastic TO-220**
(LTC DWG # 05-08-1420)

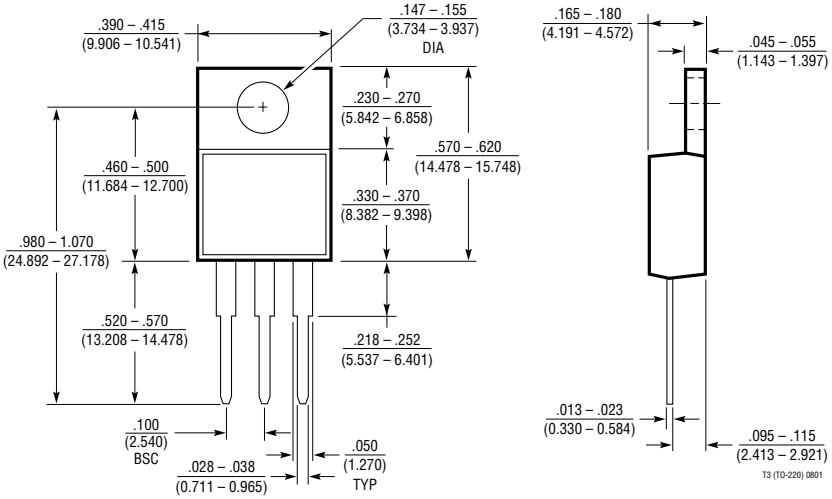

# PACKAGE DESCRIPTION

**M Package**
**3-Lead Plastic DD Pak**
(LTC DWG # 05-08-1460)

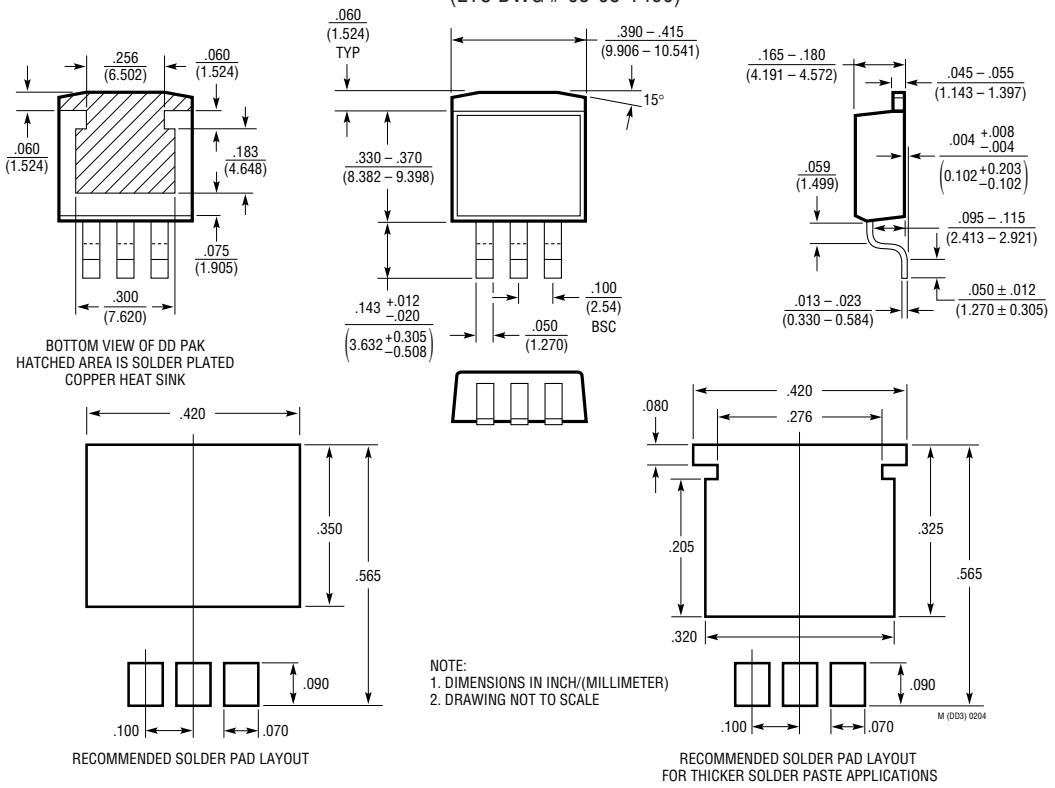


**P Package**
**3-Lead Plastic TO-3P (Similar to TO-247)**
(LTC DWG # 05-08-1450)

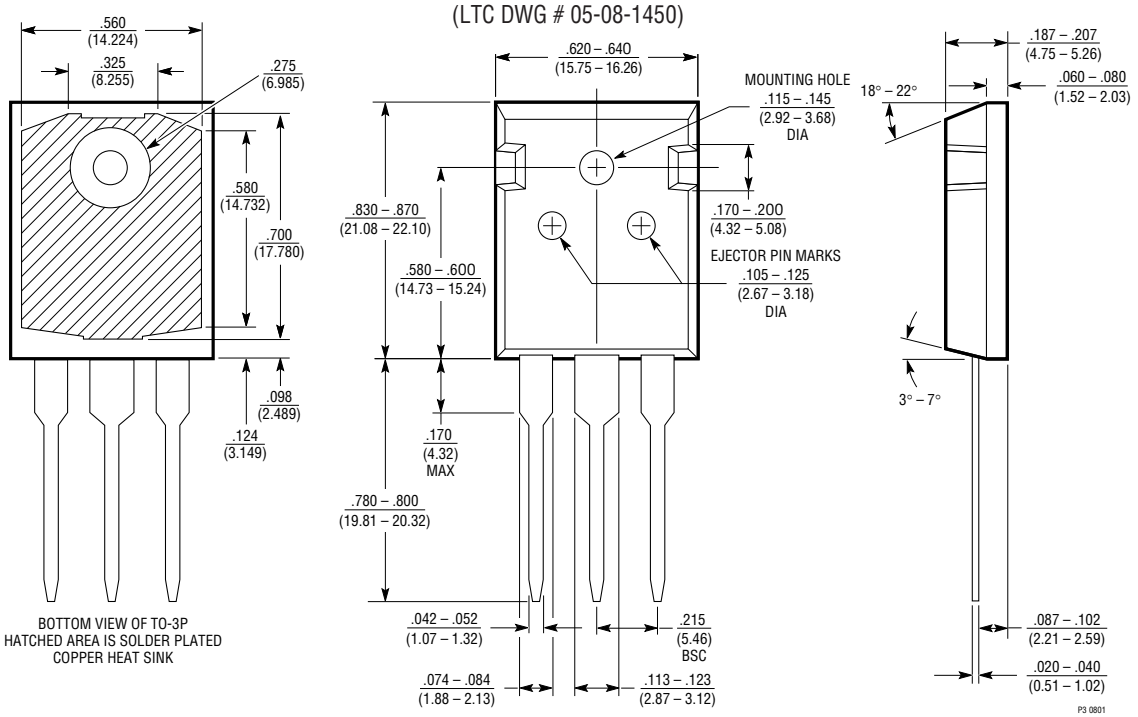




Information furnished by Linear Technology Corporation is believed to be accurate and reliable. However, no responsibility is assumed for its use. Linear Technology Corporation makes no representation that the interconnection of its circuits as described herein will not infringe on existing patent rights.

## TYPICAL APPLICATIONS

**Adjusting Output Voltage**

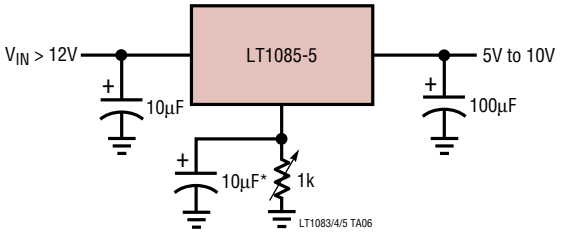


*OPTIONAL IMPROVES RIPPLE REJECTION

**Regulator with Reference**

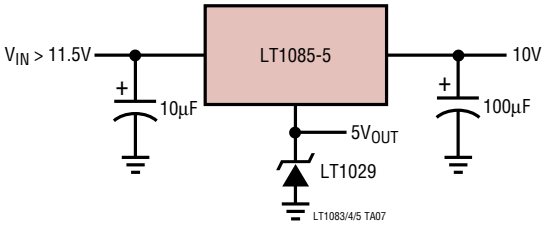


**Low Dropout Negative Supply**

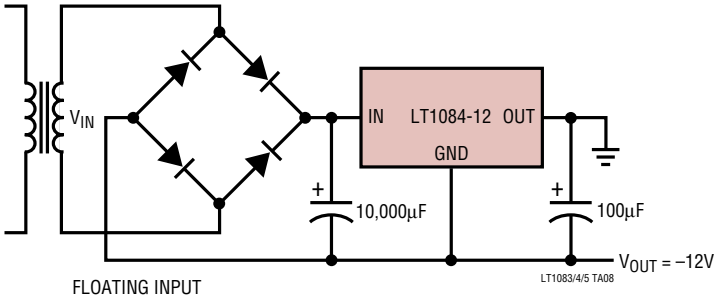


**Battery Backed Up Regulated Supply**

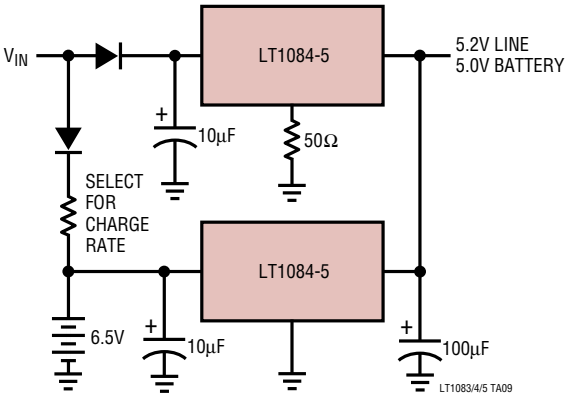


## RELATED PARTS

| PART NUMBER | DESCRIPTION | COMMENTS |
|---|---|---|
| LT1129 | 700mA Micropower Low Dropout Regulator | 50µA Quiescent Current |
| LT1175 | 500mA Negative Low Dropout Micropower Regulator | 45µA $I_Q$, 0.26V Dropout Voltage, SOT-223 Package |
| LT1374 | 4.5A, 500kHz Step-Down Converter | 4.5A, 0.07Ω Internal Switch, SO-8 Package |
| LT1529 | 3A Low Dropout Regulator with 50µA $I_Q$ | 500mV Dropout Voltage |
| LT1573 | UltraFast™ Transient Response Low Dropout Regulator | Drives External PNP |
| LT1575 | UltraFast Transient Response Low Dropout Regulator | Drives External N-Channel MOSFET |
| LT1580 | 7A, Very Low Dropout Regulator | 0.54V Dropout at 7A, Fixed 2.5$V_{OUT}$ and Adjustable |
| LT1581 | 10A, Very Low Dropout Regulator | 0.63V Dropout at 10A, Fixed 2.5$V_{OUT}$ and Adjustable |
| LT1584/85/87 | 7A/4.6A/3A Fast Response LDOs | Fast Transient Response for Microprocessor Applications |
| LT1735 | Synchronous Step-Down Converter | High Efficiency, OPTI-LOOP™ Compensation |
| LT1761 Series | 100mA, Low Noise, Low Dropout Micropower Regulators in SOT-23 | 20µA Quiescent Current, 20µ$V_{RMS}$ Noise, SOT-23 Package |
| LT1762 Series | 150mA, Low Noise, LDO Micropower Regulators | 25µA Quiescent Current, 20µ$V_{RMS}$ Noise, MSOP Package |
| LT1763 Series | 500mA, Low Noise LDO Micropower Regulators | 30µA Quiescent Current, 20µ$V_{RMS}$ Noise, SO-8 Package |
| LT1764 | 3A Low Noise Fast Transient Response LDO | 40µ$V_{RMS}$ Noise, 5-Lead DD Package |
| LT1962 | 300mA, Low Noise LDO Micropower Regulator | 20µ$V_{RMS}$ Noise, MSOP Package |
| LT1963 | 1.5A, Low Noise, Fast Transient Response LDO | 40µ$V_{RMS}$ Noise, SOT-223 Package |

UltraFast and OPTI-LOOP are trademarks of Linear Technology Corporation.




Linear Technology Corporation
1630 McCarthy Blvd., Milpitas, CA 95035-7417
(408) 432-1900 • FAX: (408) 434-0507 • www.linear.com

LT 1007 REV D • PRINTED IN USA
© LINEAR TECHNOLOGY CORPORATION 1994