Direct mount LED lamps

Lead pitch of 2.5mm and 5mm allow direct mount on PCB by using an automatic placement machine.
Direct mount lamps won't fall down.

●Product Designation

- When ordering, specify the type.
- Check each code against the code tables shown below.
- Fill a space with the next character.

2.5mm pitch

A	Reflection
R	Reflection
V	V-Shape

R	Red Colored Diffused
U	Orange Colored Diffused
Y	Yellow Colored Diffused
G	Green Colored Diffused
C	Colored Clear

Input brightness rank signal display
One rank preferred [/] [K] [ ]
Multiple rank preferred [/] [K] [N]
・See Brightness Rank List P.261

Shape Type | Lamp Shape | Lens Color | Luminance Rank

S L R – 3 4 2 V R 3 F [ ] [ ] [ ] [ ]

Number of Chips

L	1-element lamp

Emitting Color

V	Red 650nm (Typ.)
D	Orange 610nm (Typ.)
Y	Yellow 585nm (Typ.)
M	Green 563nm (Typ.)
P	Pure Green 555nm (Typ.)

Terminal process shape and lead frame shape

3F	Straight
T□□	Taping specifications

Datasheet.Live

5mm pitch

Input brightness rank signal display
One rank preferred [/] [K] [ ]
Multiple rank preferred [/] [K] [N]
・See Brightness Rank List P.261

Lamp Shape | Luminance Rank

S L R – 3 2 5 V R T 3 1 [ ] [ ]

Number of Chips

L	1-element lamp

Shape Type

R	Reflection
C	Cylinder

Emitting Color

V	Red 650nm (Typ.)
D	Orange 610nm (Typ.)
Y	Yellow 585nm (Typ.)
M	Green 563nm (Typ.)

Lens Color

R	Red Colored Diffused
G	Green Colored Diffused
C	Colored Clear

Terminal process shape and lead frame shape

T31	Type 3 (straight) straight type

●Reflector types (SLR) , Flat disc types (SLR)

Type	Emitter surface size (mm)	Series name	Lens \ Emitting color / Emitting material / λp (nm)	Red GaAsP on GaP 650	Orange GaAsP on GaP 610	Yellow GaAsP on GaP 585	Green GaP 563	Basic ordering unit	Quantity /package	Quantity /bag	Rank
Flat disc types	φ3.1	SLR-322	Colored clear	VC	DC	YC	MC	2,000	2,000	100	◎
			Colored diffused	VR	DU	YY	MG				
Reflector types	φ3.2	SLR-332	Colored clear	VC	DC	YC	MC	2,000	2,000	100	◎
			Colored diffused	VR	DU	YY	MG				
	φ3.1	SLR-342	Colored clear	VC	DC	YC	MC	2,000	2,000	100	◎
			Colored diffused	VR	DU	YY	MG				
	φ3.2	SLR-325	Colored clear	VC	DC	YC	MC	2,000 (Straight taping only)	2,000	–	◎
			Colored diffused	VR	–	YY	MG				
	φ5.0	SLR-505	Colored clear	VC	DC	–	MC	2,000 (Straight taping only)	2,000	–	◎
			Colored diffused	VR	–	YY	MG				

◎ : Standard products

(Unit : mm)

SLR-322

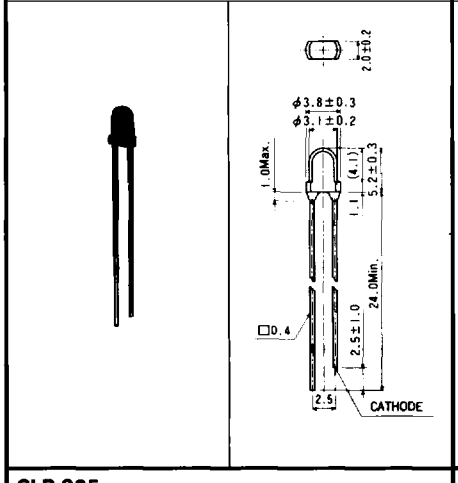

SLR-332

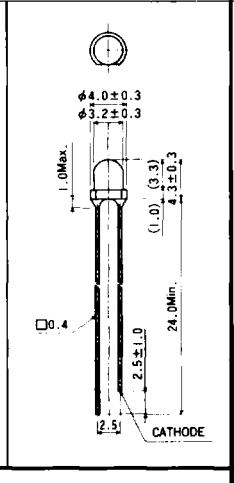

SLR-342

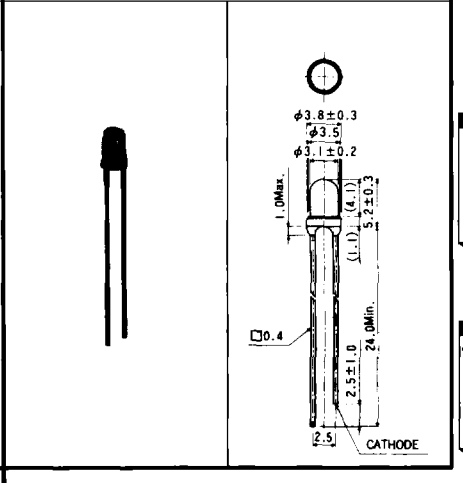

SLR-325

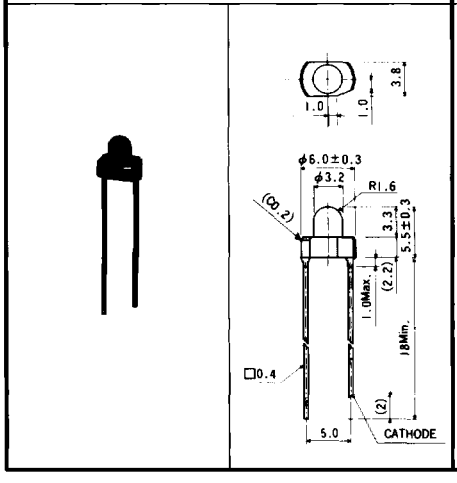

SLR-505

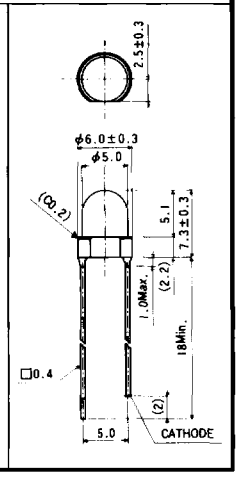

LED Indicator Lamps
LED
Taping condition Page 233
Taping specifications Page 233