FAIRCHILD SEMICONDUCTOR®

September 2009

MOC3010M, MOC3011M, MOC3012M, MOC3020M, MOC3021M, MOC3022M, MOC3023M
6-Pin DIP Random-Phase Optoisolators Triac Driver Output (250/400 Volt Peak)

Features

- Excellent I_{FT} stability—IR emitting diode has low degradation
- High isolation voltage—minimum 5300 VAC RMS
- Underwriters Laboratory (UL) recognized—File #E90700
- Peak blocking voltage
  - 250V-MOC301XM
  - 400V-MOC302XM
- VDE recognized (File #94766)
  - Ordering option V (e.g. MOC3023VM)

Description

The MOC301XM and MOC302XM series are optically isolated triac driver devices. These devices contain a GaAs infrared emitting diode and a light activated silicon bilateral switch, which functions like a triac. They are designed for interfacing between electronic controls and power triacs to control resistive and inductive loads for 115 VAC operations.

Datasheet.Live

Applications

- Industrial controls
- Solenoid/valve controls
- Traffic lights
- Static AC power switch
- Vending machines
- Incandescent lamp dimmers
- Solid state relay
- Motor control
- Lamp ballasts

Schematic

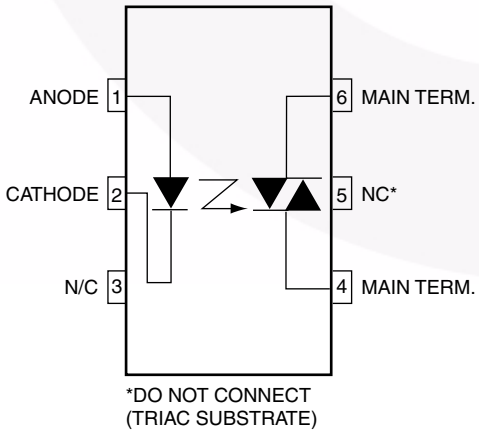

Package Outlines

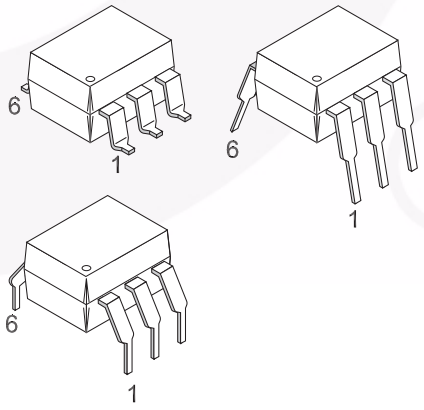

©2005 Fairchild Semiconductor Corporation

Absolute Maximum Ratings (T_A = 25°C unless otherwise noted)

Stresses exceeding the absolute maximum ratings may damage the device. The device may not function or be operable above the recommended operating conditions and stressing the parts to these levels is not recommended. In addition, extended exposure to stresses above the recommended operating conditions may affect device reliability. The absolute maximum ratings are stress ratings only.

Symbol	Parameters	Device	Value	Units
TOTAL DEVICE				
T_{STG}	Storage Temperature	All	-40 to +150	°C
T_{OPR}	Operating Temperature	All	-40 to +85	°C
T_{SOL}	Lead Solder Temperature	All	260 for 10 sec	°C
T_J	Junction Temperature Range	All	-40 to +100	°C
V_{ISO}	Isolation Surge Voltage(1) (peak AC voltage, 60Hz, 1 sec. duration)	All	7500	Vac(pk)
P_D	Total Device Power Dissipation @ 25°C Ambient	All	330	mW
	Derate above 25°C		4.4	mW/°C
EMITTER				
I_F	Continuous Forward Current	All	60	mA
V_R	Reverse Voltage	All	3	V
P_D	Total Power Dissipation @ 25°C Ambient	All	100	mW
	Derate above 25°C		1.33	mW/°C
DETECTOR				
V_{DRM}	Off-State Output Terminal Voltage	MOC3010M/1M/2M MOC3020M/1M/2M/3M	250 400	V
I_{TSM}	Peak Repetitive Surge Current (PW = 1ms, 120pps)	All	1	A
P_D	Total Power Dissipation @ 25°C Ambient	All	300	mW
	Derate above 25°C		4	mW/°C

Note:

1. Isolation surge voltage, V_{ISO}, is an internal device dielectric breakdown rating. For this test, Pins 1 and 2 are common, and Pins 4, 5 and 6 are common.

©2005 Fairchild Semiconductor Corporation

Electrical Characteristics (T_A = 25°C Unless otherwise specified)

Individual Component Characteristics

Symbol	Parameters	Test Conditions	Device	Min.	Typ.	Max.	Units
EMITTER							
V_F	Input Forward Voltage	I_F = 10mA	All		1.15	1.5	V
I_R	Reverse Leakage Current	V_R = 3V, T_A = 25°C	All		0.01	100	µA
DETECTOR							
I_{DRM}	Peak Blocking Current, Either Direction	Rated V_{DRM}, I_F = 0(2)	All		10	100	nA
V_{TM}	Peak On-State Voltage, Either Direction	I_{TM} = 100 mA peak, I_F = 0	All		1.8	3	V

Transfer Characteristics

Symbol	DC Characteristics	Test Conditions	Device	Min.	Typ.	Max.	Units
I_{FT}	LED Trigger Current	Voltage = 3V(3)	MOC3020M			30	mA
			MOC3010M			15	
			MOC3021M				
			MOC3011M			10	
			MOC3022M				
			MOC3012M			5	
			MOC3023M				
I_H	Holding Current, Either Direction		All		100		µA

Notes:

2. Test voltage must be applied within dv/dt rating.
3. All devices are guaranteed to trigger at an I_F value less than or equal to max I_{FT}. Therefore, recommended operating I_F lies between max I_{FT} (30mA for MOC3020M, 15mA for MOC3010M and MOC3021M, 10mA for MOC3011M and MOC3022M, 5mA for MOC3012M and MOC3023M) and absolute max I_F (60mA).

©2005 Fairchild Semiconductor Corporation

Safety and Insulation Ratings

As per IEC 60747-5-2, this optocoupler is suitable for “safe electrical insulation” only within the safety limit data. Compliance with the safety ratings shall be ensured by means of protective circuits.

Symbol	Parameter	Min.	Typ.	Max.	Unit
	Installation Classifications per DIN VDE 0110/1.89 Table 1				
	For Rated Main Voltage < 150Vrms		I-IV		
	For Rated Main voltage < 300Vrms		I-IV		
	Climatic Classification		55/100/21		
	Pollution Degree (DIN VDE 0110/1.89)		2		
CTI	Comparative Tracking Index	175			
V_{PR}	Input to Output Test Voltage, Method b, V_{IORM} x 1.875 = V_{PR}, 100% Production Test with tm = 1 sec, Partial Discharge < 5pC	1594			V_{peak}
	Input to Output Test Voltage, Method a, V_{IORM} x 1.5 = V_{PR}, Type and Sample Test with tm = 60 sec, Partial Discharge < 5pC	1275			V_{peak}
V_{IORM}	Max. Working Insulation Voltage	850			V_{peak}
V_{IOTM}	Highest Allowable Over Voltage	6000			V_{peak}
	External Creepage	7			mm
	External Clearance	7			mm
	Insulation Thickness	0.5			mm
RIO	Insulation Resistance at Ts, V_{IO} = 500V	10^9			Ω

Typical Performance Curves

Figure 1. LED Forward Voltage vs. Forward Current

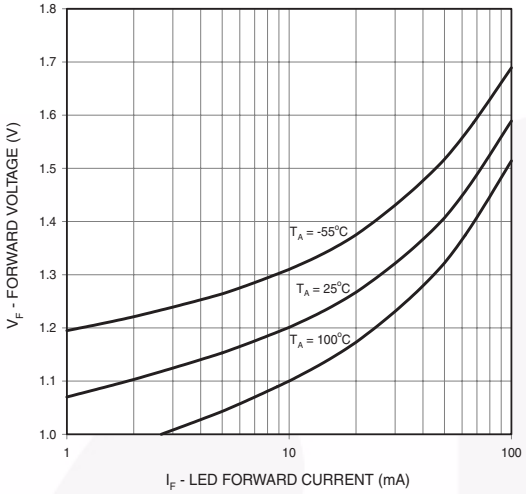

Figure 2. On-State Characteristics

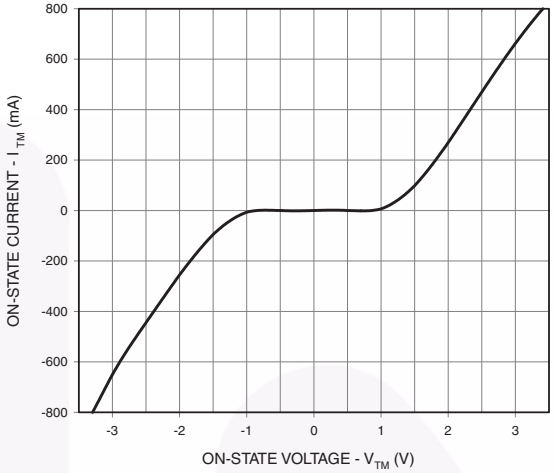

Fig ure 3. Trigger Current vs. Ambient Temperature

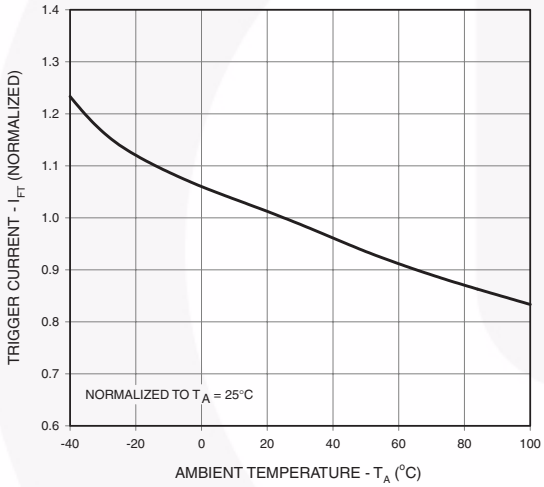

Figure 4. LED Current Required to Trigger vs. LED Pulse Width

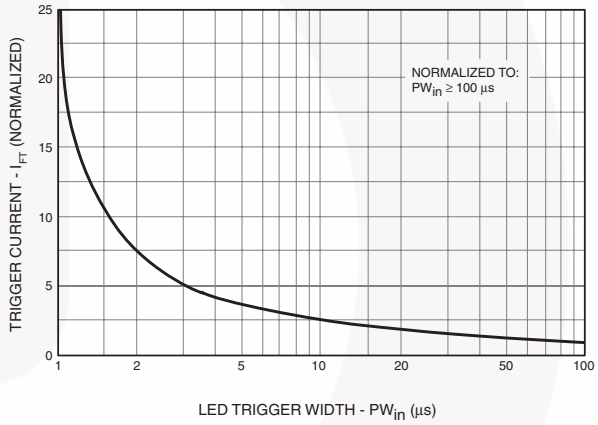

Figure 5. dv/dt vs. Temperature

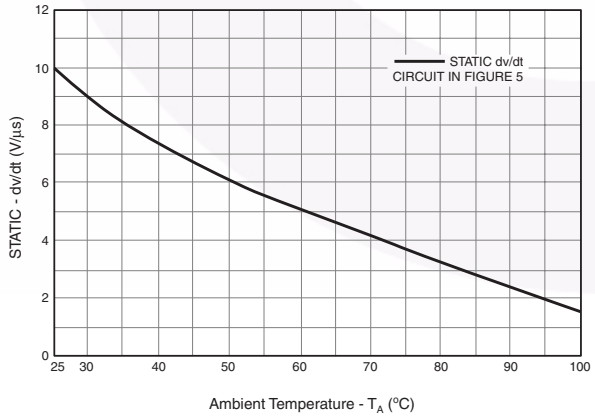

Figure 6. Leakage Current, I_{DRM} vs. Temperature

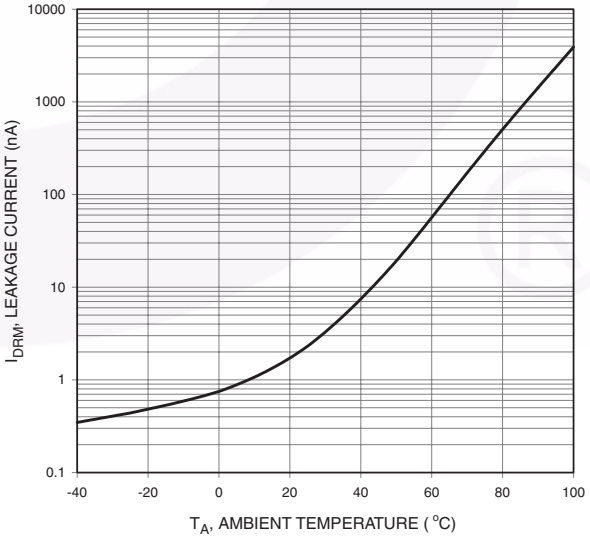

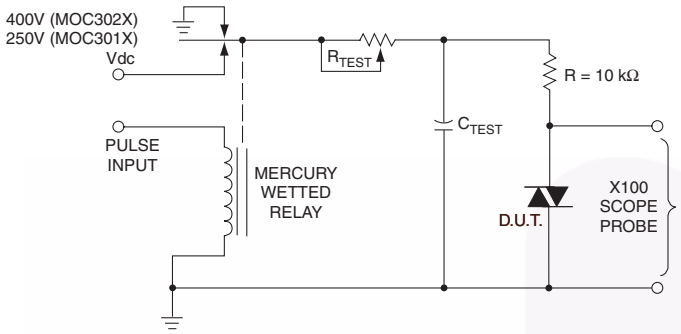

1. The mercury wetted relay provides a high speed repeated pulse to the D.U.T.
2. 100x scope probes are used, to allow high speeds and voltages.
3. The worst-case condition for static dv/dt is established by triggering the D.U.T. with a normal LED input current, then removing the current. The variable R_{TEST} allows the dv/dt to be gradually increased until the D.U.T. continues to trigger in response to the applied voltage pulse, even after the LED current has been removed. The dv/dt is then decreased until the D.U.T. stops triggering. τ_{RC} is measured at this point and recorded.

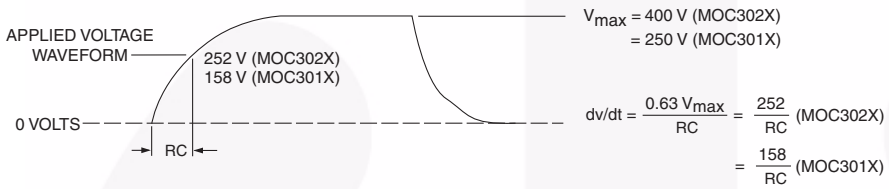

Figure 5. Static dv/dt Test Circuit

Note:
This optoisolator should not be used to drive a load directly. It is intended to be a trigger device only.

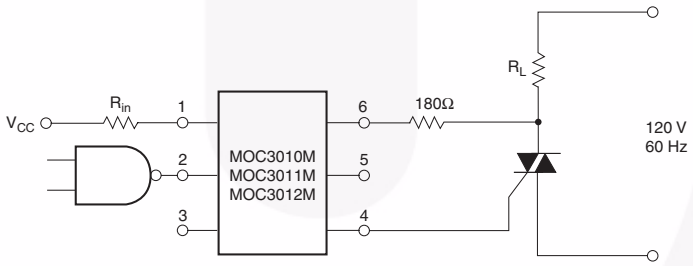

Figure 6. Resistive Load

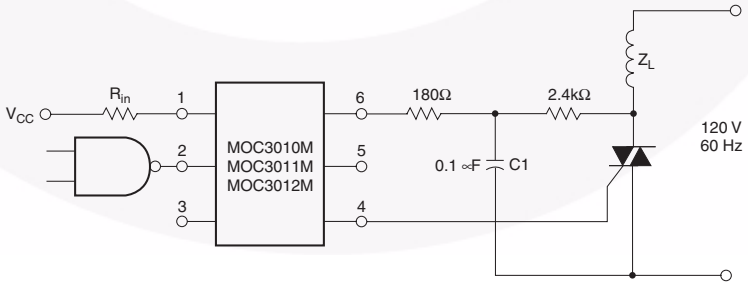

Figure 7. Inductive Load with Sensitive Gate Triac (I_{GT} 15 mA)

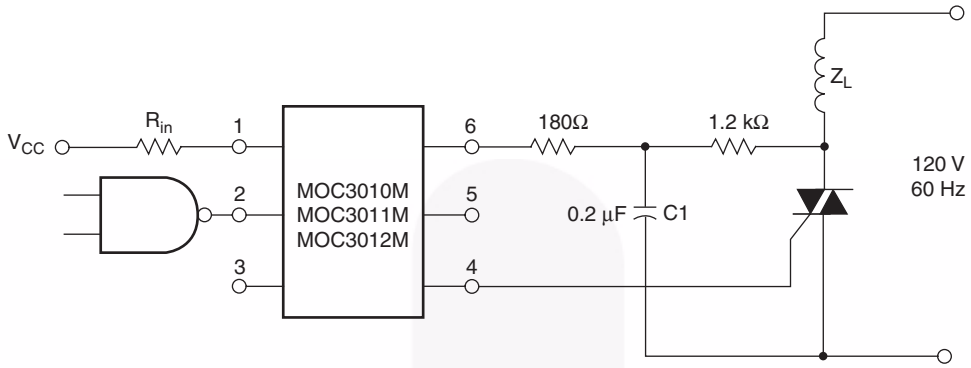

Figure 8. Inductive Load with Sensitive Gate Triac ($I_{GT} \leq 15$ mA)

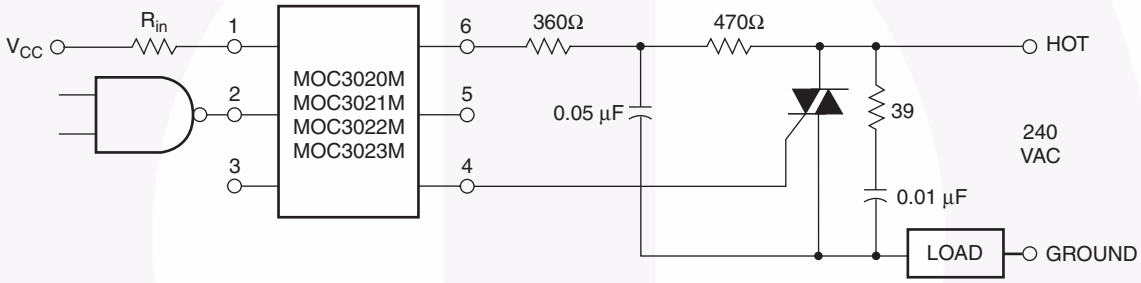

In this circuit the “hot” side of the line is switched and the load connected to the cold or ground side.

The 39Ω resistor and 0.01μF capacitor are for snubbing of the triac, and the 470Ω resistor and 0.05μF capacitor are for snubbing the coupler. These components may or may not be necessary depending upon the particular and load used.

Figure 9. Typical Application Circuit

Package Dimensions

Through Hole

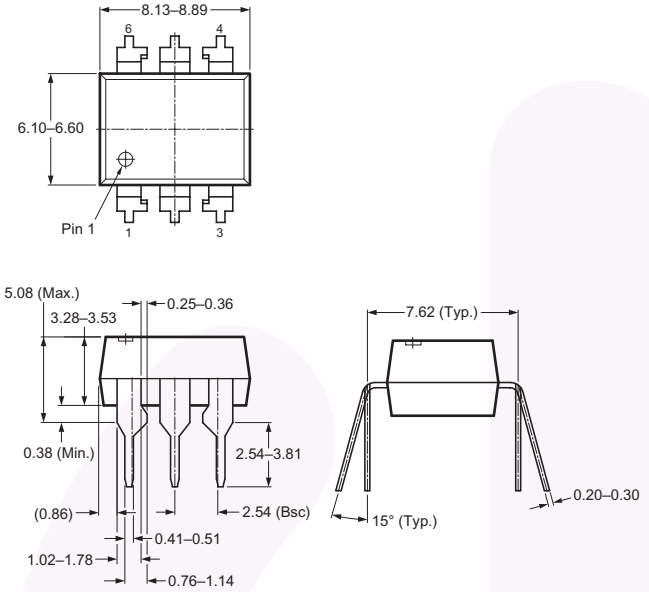

0.4" Lead Spacing

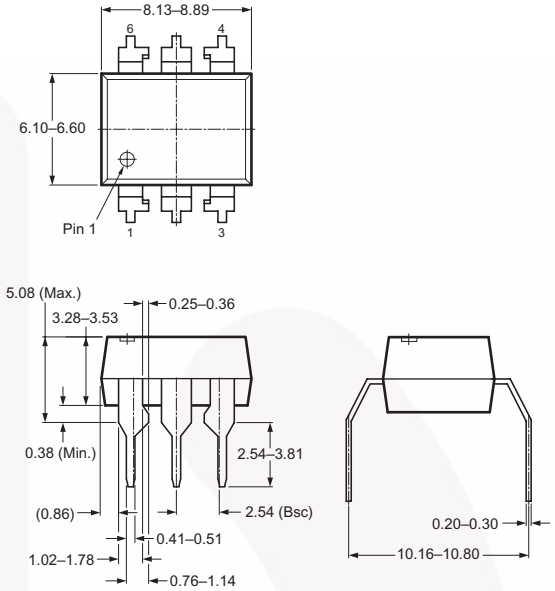

Surface Mount

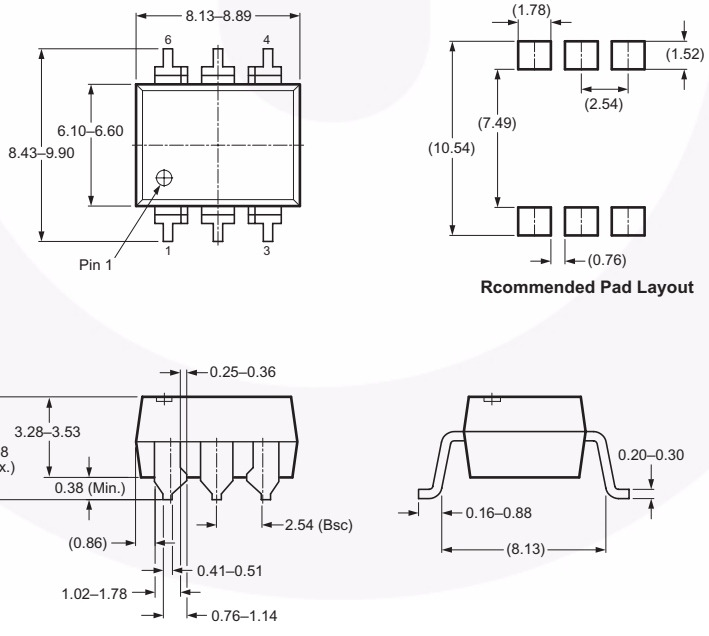

Note:
All dimensions in mm.

Ordering Information

Option	Order Entry Identifier (Example)	Description
No option	MOC3010M	Standard Through Hole Device
S	MOC3010SM	Surface Mount Lead Bend
SR2	MOC3010SR2M	Surface Mount; Tape and Reel
T	MOC3010TM	0.4" Lead Spacing
V	MOC3010VM	VDE 0884
TV	MOC3010TVM	VDE 0884, 0.4" Lead Spacing
SV	MOC3010SVM	VDE 0884, Surface Mount
SR2V	MOC3010SR2VM	VDE 0884, Surface Mount, Tape and Reel

Marking Information

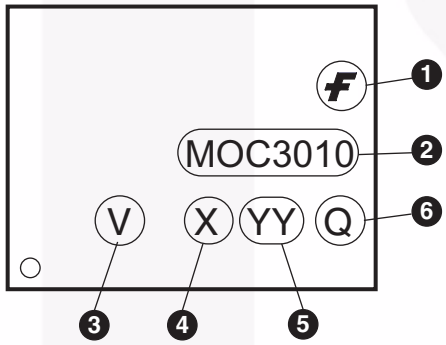

Definitions	
1	Fairchild logo
2	Device number
3	VDE mark (Note: Only appears on parts ordered with VDE option – See order entry table)
4	One digit year code, e.g., '3'
5	Two digit work week ranging from '01' to '53'
6	Assembly package code

*Note – Parts that do not have the 'V' option (see definition 3 above) that are marked with date code '325' or earlier are marked in portrait format.

Carrier Tape Specification

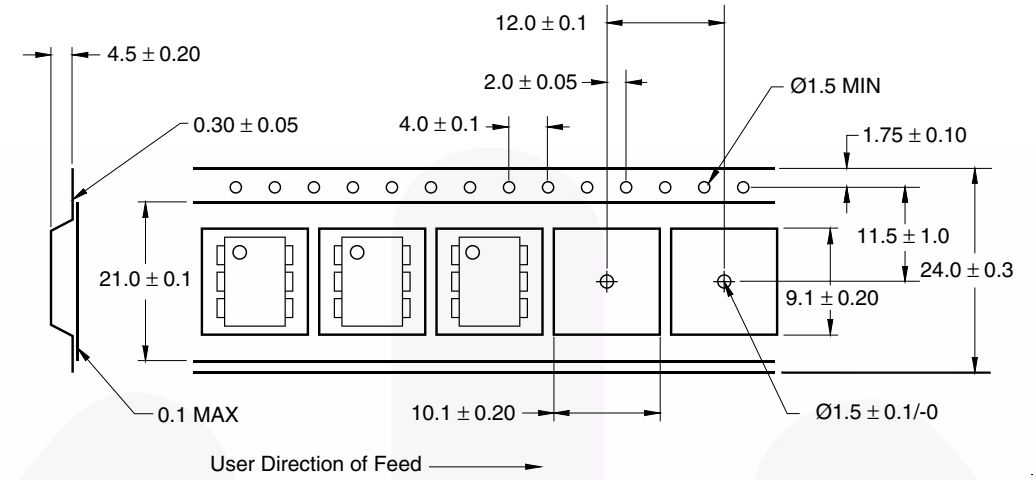

Reflow Profile

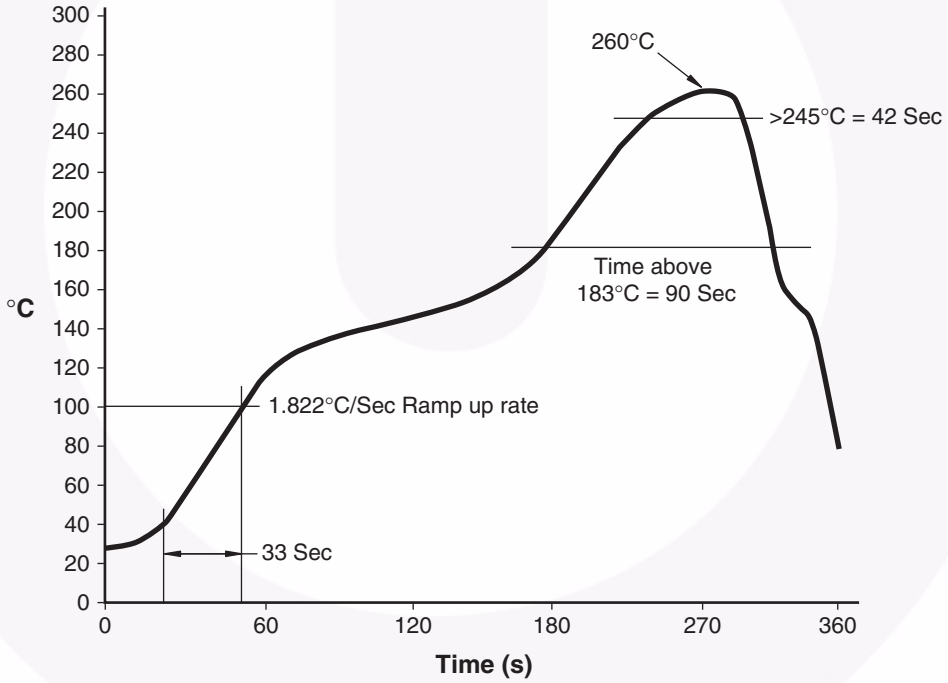

FAIRCHILD SEMICONDUCTOR®

TRADEMARKS

The following includes registered and unregistered trademarks and service marks, owned by Fairchild Semiconductor and/or its global subsidiaries, and is not intended to be an exhaustive list of all such trademarks.

Auto-SPM™
Build it Now™
CorePLUS™
CorePOWER™
CROSSVOLT™
CTL™
Current Transfer Logic™
EcoSPARK®
EfficentMax™
EZSWITCH™*
™*
®
Fairchild®
Fairchild Semiconductor®
FACT Quiet Series™
FACT®
FAST®
FastvCore™
FETBench™
FlashWriter®*
FPS™
F-PFS™
FRFET®
Global Power Resource℠
Green FPS™
Green FPS™ e-Series™
G*max*™
GTO™
IntelliMAX™
ISOPLANAR™
MegaBuck™
MICROCOUPLER™
MicroFET™
MicroPak™
MillerDrive™
MotionMax™
Motion-SPM™
OPTOLOGIC®
OPTOPLANAR®
®
PDP SPM™
Power-SPM™
PowerTrench®
PowerXS™
Programmable Active Droop™
QFET®
QS™
Quiet Series™
RapidConfigure™
™
Saving our world, 1mW/W/kW at a time™
SmartMax™
SMART START™
SPM®
STEALTH™
SuperFET™
SuperSOT™-3
SuperSOT™-6
SuperSOT™-8
SupreMOS™
SyncFET™
Sync-Lock™
SYSTEM GENERAL ®*
The Power Franchise®
the power franchise
TinyBoost™
TinyBuck™
TinyLogic®
TINYOPTO™
TinyPower™
TinyPWM™
TinyWire™
TriFault Detect™
TRUECURRENT™*
µSerDes™
SerDes
UHC®
Ultra FRFET™
UniFET™
VCX™
VisualMax™
XS™

* Trademarks of System General Corporation, used under license by Fairchild Semiconductor.

DISCLAIMER

FAIRCHILD SEMICONDUCTOR RESERVES THE RIGHT TO MAKE CHANGES WITHOUT FURTHER NOTICE TO ANY PRODUCTS HEREIN TO IMPROVE RELIABILITY, FUNCTION, OR DESIGN. FAIRCHILD DOES NOT ASSUME ANY LIABILITY ARISING OUT OF THE APPLICATION OR USE OF ANY PRODUCT OR CIRCUIT DESCRIBED HEREIN; NEITHER DOES IT CONVEY ANY LICENSE UNDER ITS PATENT RIGHTS, NOR THE RIGHTS OF OTHERS. THESE SPECIFICATIONS DO NOT EXPAND THE TERMS OF FAIRCHILD'S WORLDWIDE TERMS AND CONDITIONS, SPECIFICALLY THE WARRANTY THEREIN, WHICH COVERS THESE PRODUCTS.

LIFE SUPPORT POLICY

FAIRCHILD'S PRODUCTS ARE NOT AUTHORIZED FOR USE AS CRITICAL COMPONENTS IN LIFE SUPPORT DEVICES OR SYSTEMS WITHOUT THE EXPRESS WRITTEN APPROVAL OF FAIRCHILD SEMICONDUCTOR CORPORATION.

As used herein:

1. Life support devices or systems are devices or systems which, (a) are intended for surgical implant into the body or (b) support or sustain life, and (c) whose failure to perform when properly used in accordance with instructions for use provided in the labeling, can be reasonably expected to result in a significant injury of the user.
2. A critical component in any component of a life support, device, or system whose failure to perform can be reasonably expected to cause the failure of the life support device or system, or to affect its safety or effectiveness.

ANTI-COUNTERFEITING POLICY

Fairchild Semiconductor Corporation's Anti-Counterfeiting Policy. Fairchild's Anti-Counterfeiting Policy is also stated on our external website, www.fairchildsemi.com, under Sales Support.

Counterfeiting of semiconductor parts is a growing problem in the industry. All manufacturers of semiconductor products are experiencing counterfeiting of their parts. Customers who inadvertently purchase counterfeit parts experience many problems such as loss of brand reputation, substandard performance, failed applications, and increased cost of production and manufacturing delays. Fairchild is taking strong measures to protect ourselves and our customers from the proliferation of counterfeit parts. Fairchild strongly encourages customers to purchase Fairchild parts either directly from Fairchild or from Authorized Fairchild Distributors who are listed by country on our web page cited above. Products customers buy either from Fairchild directly or from Authorized Fairchild Distributors are genuine parts, have full traceability, meet Fairchild's quality standards for handling and storage and provide access to Fairchild's full range of up-to-date technical and product information. Fairchild and our Authorized Distributors will stand behind all warranties and will appropriately address any warranty issues that may arise. Fairchild will not provide any warranty coverage or other assistance for parts bought from Unauthorized Sources. Fairchild is committed to combat this global problem and encourage our customers to do their part in stopping this practice by buying direct or from authorized distributors.

PRODUCT STATUS DEFINITIONS

Definition of Terms

Datasheet Identification	Product Status	Definition
Advance Information	Formative / In Design	Datasheet contains the design specifications for product development. Specifications may change in any manner without notice.
Preliminary	First Production	Datasheet contains preliminary data; supplementary data will be published at a later date. Fairchild Semiconductor reserves the right to make changes at any time without notice to improve design.
No Identification Needed	Full Production	Datasheet contains final specifications. Fairchild Semiconductor reserves the right to make changes at any time without notice to improve the design.
Obsolete	Not In Production	Datasheet contains specifications on a product that is discontinued by Fairchild Semiconductor. The datasheet is for reference information only.

Rev. I40

©2005 Fairchild Semiconductor Corporation